DEPARTMENT OF THE NAVY
NAVAL SEA SYSTEMS COMMAND
1333 ISAAC HULL AVE SE
WASHINGTON NAVY YARD DC 20376-0001

IN REPLY TO
9555
SER 05P4/023
27 February 2004

From: Commander, Naval Sea Systems Command (SEA 05P4)
To: Commander, Naval Surface Force, U.S. Pacific Fleet (N432)

Subj: AFFF AND COUNTERMEASURE WASHDOWN (CMWD) SYSTEM SOLENOID-OPERATED PILOT VALVE (SOPV) COIL PROTECTION MODIFICATION PROCEDURES, REVISION OF

Ref: (a) NAVSEA ltr 9555 Ser 05P4/095 of 8 August 2003
(b) CNSF N432A1 Telecon of 4 January 2004

Encl: (1) AFFF SYSTEM SOPV COIL PROTECTION MODS
(2) CMWD SYSTEM SOPV COIL PROTECTION MODS

1. NAVSEA has completed modifications to the procedures provided by reference (a), as requested by reference (b). Enclosures (1) and (2) supersede the procedures forwarded with reference (a). Note that no changes to the wiring configurations were required.

2. The enclosed procedures include an SOPV data sheet, which is required to be filled out when the modifications are being completed. Copies of these data sheets must be sent to SEA 05P4 for configuration control purposes. The data sheets may be sent via email.

3. NAVSEA POC is Mr. Doug Barylski, NAVSEA 05P4, phone (202) 781-3612, DSN 326-3612, or email barylskidj@navsea.navy.mil.

D. M. McCrory
By Direction

Copy to:
SEA 05P4 file
COMNAVSURFLANT N4
COMNAVSURFLANT N7
COMNAVSURFPAC N7
PEO-SHIPS FT

AFFF System
SOPV Coil Protection Mods

This procedure includes generic instructions to isolate the AFFF system piping to prevent inadvertent flow during SOPV tests and SOPV coil protection modifications.

This procedure inspects and modifies the SOPV, if possible, so that internal and external wiring utilizes S3 for coil protection and S1 and/or S2 for remote indication.

Safety Precautions.

1. Forces afloat comply with NAVOSH Program Manual for Forces Afloat, OPNAVINST 5100.19 series.
2. Ensure all tag-out procedures are in accordance with current shipboard instructions.
3. Solenoid operated pilot valves may be supplied by more than one power source. Ensure all electrical circuits are de-energized.
4. Consider all electrical leads to be energized until positively proven they are de-energized.

Preliminary.

1. Deviations on procedures and valve alignment are allowed to suit specific ship configuration.
2. Red "Danger" tags shall be used where tag-outs are required. Yellow "Caution" tags may be installed at the discretion of the Damage Control Assistant (DCA).
3. Comply with ship's regulations before accomplishing any modifications.
4. Obtain permission from DCA prior to removing any fire extinguishing system from the normal readiness condition.
5. Install test cast fittings in sprinkling control valves to prevent sprinkling.

Procedure.

NOTE 1: Work center supervisor review procedure and omit steps/add steps to suit specific installations.

WARNING: Ensure all tag-out procedures are in accordance with current shipboard instructions.

1. De-energize all electrical circuits to applicable solenoid operated pilot valve(s) and tag "Out of Service".

WARNING: Solenoid operated pilot valves may be supplied by more than one power source.

2. Ensure all electrical circuits are de-energized.
3. Remove SOPV cover from baseplate.

WARNING: Consider all electrical leads to be energized until positively proven they are de-energized.

4. Test SOPV electrical circuit with AC/DC multimeter to ensure circuits are de-energized.

NOTE 2: Improper alignment of micro switch used for coil protection can result in premature loss of voltage to solenoid causing failure of valve to fully cycle.

5. Inspect SOPV wiring. Document on data sheet. If all three switches are used for external indication and control, coil protection is not possible and no work is required. If any one of the three switches is not used for external indication and control perform switch adjustment procedure located on drawing 17312 of Solenoid Operated Pilot Valve Model CSM5M-3A technical manual S6435-B1-MMO-010.
6. Visually inspect each SOPV to ensure that the SOPV linkage is properly lubricated, the SOPV is free of corrosion, dirt and debris, the SOPV does not show evidence of seawater leakage around the T-handle inside the cover or show signs of valve leak-by. If any of these conditions exist the SOPV should be cleaned, inspected and lubricated in accordance with PMS MRC C2EB Y (R-18) or replaced, as necessary.

NOTE 3: When installing SOPV cover, ensure wiring is safely stowed away.

7. Re-install SOPV cover.
8. Remove safety tag(s) and energize all electrical circuits to the SOPV.
9. Shut firemain supply cut-out valve to AFFF station.
10. Shut all cut-out valves upstream and downstream of a sprinkling control valve. Where downstream cut-out valves are not installed, ensure that adequate precautions are taken to protect downstream equipment from damage due to residual line drainage.
11. Shut AFFF station loop cut-out valve.
12. Shut AFFF concentrate pump discharge cut-out valve.
13. Ensure AFFF concentrate piping is aligned for recirculation.
14. Ensure AFFF concentrate transfer system cut-out valve is shut, if installed.

NOTE 4: Actuation of a sprinkling system will operate a service SOPV and the related AFFF station master SOPV.

15. Test the AFFF system prior to SOPV modification to ensure proper operation:

a. Man the following locations and test the hose reels/hose racks/sprinkling system:
   1. AFFF station to be tested.
   2. SOPV to be tested.
   3. Hose reel/hose rack/sprinkling system pushbutton to be tested.
b. Establish communications between locations.

WARNING: When operating the AFFF system by remote ON/OFF pushbuttons, do not keep ON or OFF button depressed for more than 3 seconds. In addition, do not cycle the SOPV more than 5 times in 5 minutes. Solenoids are for intermittent duty. Continuous energizing and excessive cycling can cause damage to the solenoid coils.

c. Notify pushbutton operator to actuate demand.
d. Observe that SOPV operates smoothly and properly, and related valve(s), pump, and alarms actuate.
e. If pushbutton is for a sprinkling system, notify the pushbutton operator to secure the sprinkling system and then notify the AFFF station operator to secure the AFFF pump. If pushbutton is for a hose reel/hose rack, notify the AFFF station operator to secure the AFFF pump.
f. Observe that SOPV operates properly, and related valve(s), pump, and alarms secure.
g. Record satisfactory operation of each service and master SOPV or any SOPV operational deficiency on the data sheet.

16. Shut firemain supply cut-out valve in control water piping to SOPV.

WARNING: Ensure all tag-out procedures are in accordance with current shipboard instructions.

17. De-energize all electrical circuits to solenoid operated pilot valve(s) and tag "Out of Service".

WARNING: Solenoid operated pilot valves may be supplied by more than one power source.

18. Ensure all electrical circuits are de-energized.
19. Remove SOPV cover from baseplate.

WARNING: Consider all electrical leads to be energized until positively proven they are de-energized.

20. Test SOPV electrical circuit with AC/DC multimeter to ensure circuits are de-energized.

21. Perform SOPV electrical checks and modifications as follows:

    a. If all three switches are used for external indication and control, coil protection is not possible and no work is required. Document on data sheet.
    b. Remove any jumpers associated with coil protection.
    c. Ensure there is no excess cable/wire inside the cover of the SOPV to avoid creation of a shock hazard especially during manual operation of the T-handle, and to avoid interference with movement of the SOPV linkage.
    d. Install wire markers as wiring is modified to agree with final wiring configuration.
    e. Relocate any remote indication or control wiring using S3 to S1, or S2 if S1 is used.
    f. Modify internal and external wiring to concur with Figures 1 and 3 for numbered terminal boards and Figures 2 and 4 for lettered terminal boards.
    g. For each SOPV, record on data sheet whether S1 and/or S2 provides remote indication.

22. Remove safety tag(s) and energize all electrical circuits to the SOPV.

23. Connect a multimeter between the following points on the applicable SOPV.

    a. On SOPVs with numbered terminal boards between TB 2-7 and TB 2-3 (common).
    b. On SOPVs with lettered terminal boards between 1 on terminal feeding L1-1 and SW3-N.O.

NOTE 5: Actuation of a sprinkling system will operate a service SOPV and the related AFFF station master SOPV.

WARNING: Keep hands and test leads clear of T-handle during SOPV test.

24. Push any ON pushbutton for the SOPV under test for one second and verify 450 volts on multimeter until the T-handle rotates and power is removed. If SOPV fails to operate, troubleshoot internal and external SOPV wiring and retest.

25. With the SOPV in the Open (actuated) position, move the meter leads as follows:

    a. On SOPVs with numbered terminal boards, move the meter lead connected to TB2-7 to TB2-4 and move the lead from TB2-3 to TB2-1.
    b. On SOPVs with lettered terminal boards, move the meter lead connected to 1 on terminal feeding L1-1 to terminal 2 feeding L2-1 and move SW3-N.O. to SW3-N.C.

WARNING: Keep hands and test leads clear of T-handle during SOPV test.

26. Push any OFF pushbutton for the SOPV under test for one second and verify

450 volts on multimeter until the T-handle rotates and power is removed. If SOPV fails to operate, troubleshoot internal and external SOPV wiring and retest.

27. Disconnect multimeter. Secure AFFF pump.

WARNING: Ensure all tag-out procedures are in accordance with current shipboard instructions.

28. De-energize all electrical circuits to solenoid operated pilot valve(s) and tag "Out of Service".

WARNING: Solenoid operated pilot valves may be supplied by more than one power source.

29. Ensure all electrical circuits are de-energized.

WARNING: Consider all electrical leads to be energized until positively proven they are de-energized.

30. Test SOPV electrical circuit with AC/DC multimeter to ensure circuits are de-energized.

NOTE 6: When installing SOPV cover, ensure wiring is safely stowed away.

31. Re-install SOPV cover.
32. Remove safety tag(s) and energize all electrical circuits to the SOPV.
33. Open firemain supply cut-out valve in control water piping to SOPV.
34. Test the AFFF system after SOPV modification to ensure proper operation:

NOTE 7: Actuation of a sprinkling system will operate a service SOPV and the related AFFF station master SOPV.

a. Man the following locations and test the hose reels/hose racks/sprinkling system:
    1. AFFF station to be tested.
    2. SOPV to be tested
    3. Hose reel/hose rack/sprinkling system pushbutton to be tested.
b. Establish communications between locations.

WARNING: When operating the AFFF system by remote ON/OFF pushbuttons, do not keep ON or OFF button depressed for more than 3 seconds. In addition, do not cycle the SOPV more than 5 times in 5 minutes. Solenoids are for

intermittent duty. Continuous energizing and excessive cycling can cause damage to the solenoid coils.

c. Notify pushbutton operator to actuate demand.
d. Observe that SOPV operates smoothly and properly, and related valve(s), pump, and alarms actuate.
e. If pushbutton is for a sprinkling system, notify the pushbutton operator to secure the sprinkling system and then notify the AFFF station operator to secure the AFFF pump. If pushbutton is for a hose reel/hose rack, notify the AFFF station operator to secure the AFFF pump.
f. Observe that SOPV operates properly, and related valve(s), pump, and alarms secure.
g. Record satisfactory operation of each service and master SOPV or any SOPV operational deficiency on the data sheet.

35. Open the AFFF concentrate discharge cut-out valve.
36. Ensure AFFF concentrate piping is aligned for normal firefighting service.
37. Open firemain supply cut-out valve to AFFF station.
38. Open the AFFF station loop cut-out valve.
39. Remove test cast fittings from sprinkling control valves.
40. Open all cut-out valves upstream and downstream of a sprinkling control valve.
41. Repeat this procedure including Preliminary steps for each service and master SOPV.
42. Ensure AFFF system is re-aligned for normal firefighting service.
43. Notify Maintenance group supervisor that system is in readiness condition.

SOPV DATA SHEET

Note: Record data for each SOPV.

SOPV Location and Service	SOPV can receive mod (at least one switch available before mod) (Yes/No)	Operation SAT before mod (Yes/No)	Operation SAT after mod (Yes/No)	SW1 used for indication or other purposes (after mod) (Yes/No)	SW2 used for indication or other purposes (after mod) (Yes/No)	Remarks

SOPV DIAGRAM WITH NUMBERED TERMINAL
BOARD INTERNAL WIRES MOVED
TO S-3 FOR COIL PROTECTION

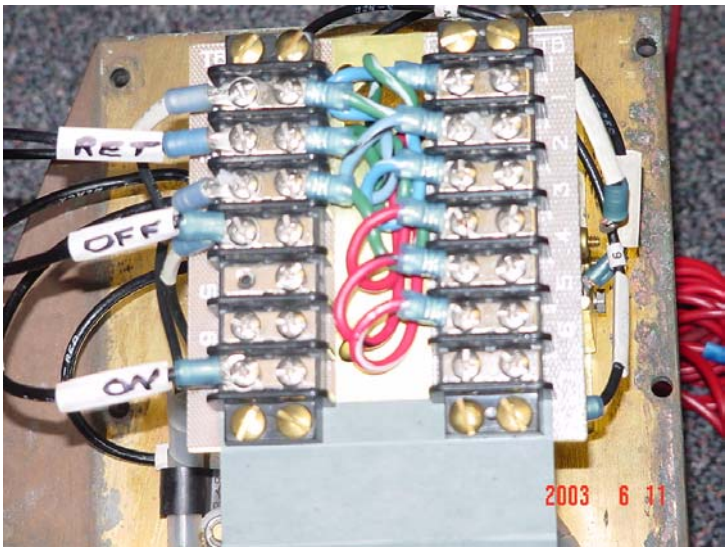

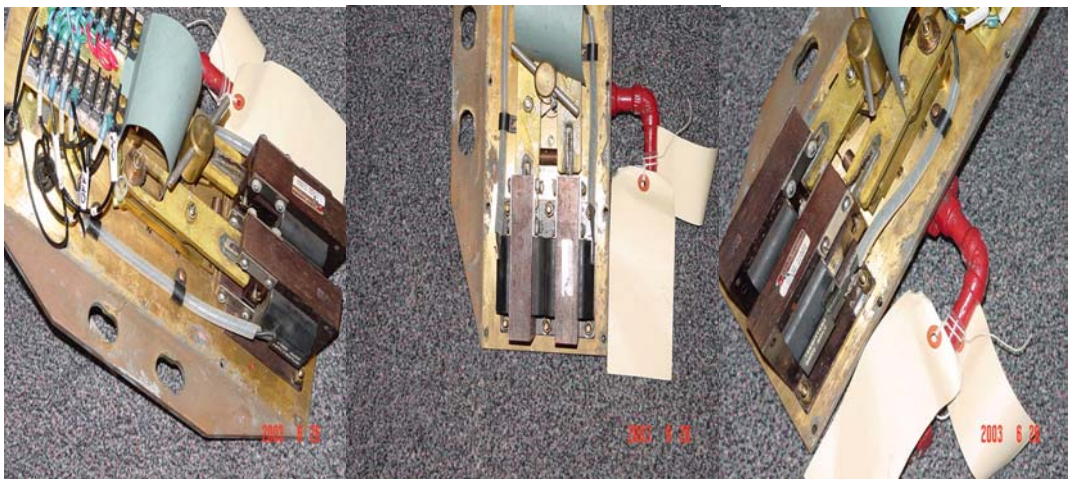

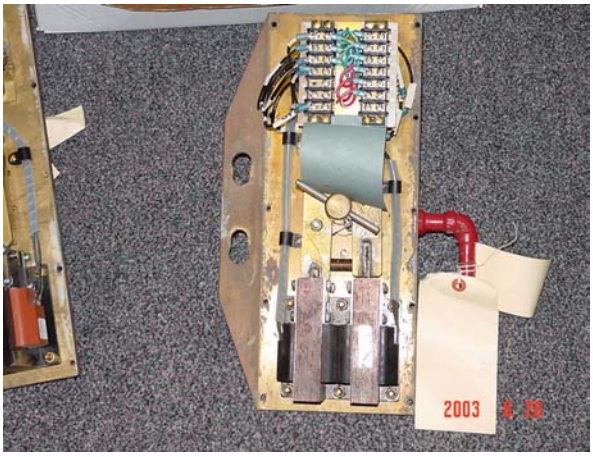

FIGURE 1

SOPV DIAGRAM WITH LETTERED TERMINAL
BOARD INTERNAL WIRES MOVED
TO S-3 FOR COIL PROTECTION

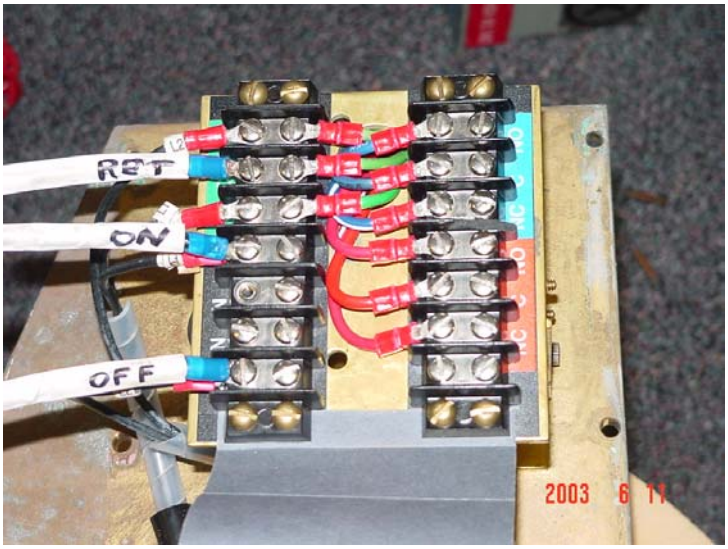

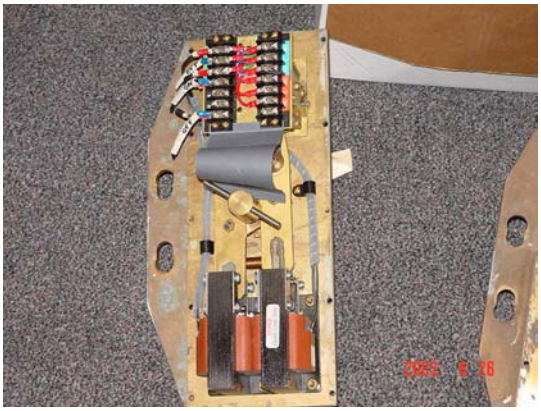

FIGURE 2

SOPV DIAGRAM WITH NUMBERED TERMINAL
BOARD INTERNAL WIRES MOVED
TO S-3 FOR COIL PROTECTION

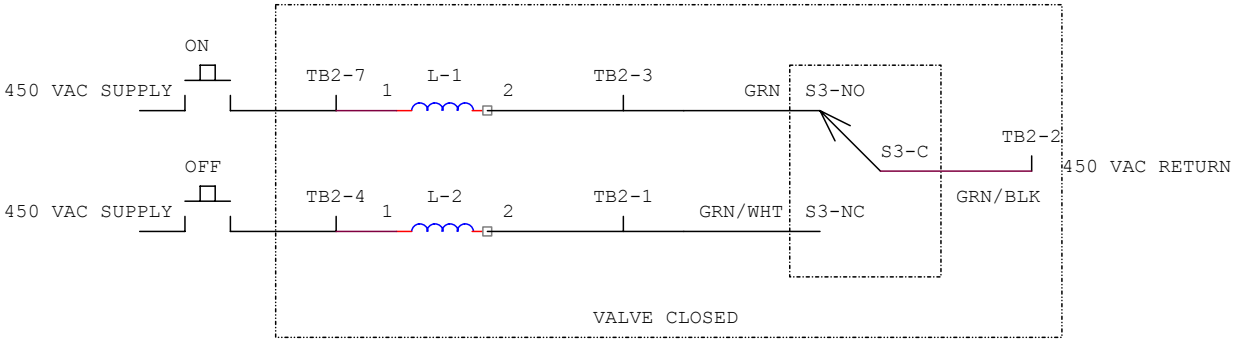

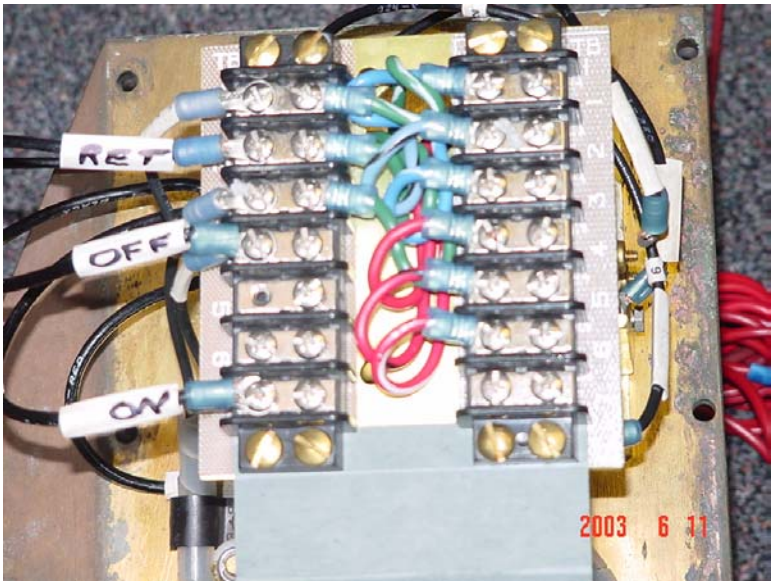

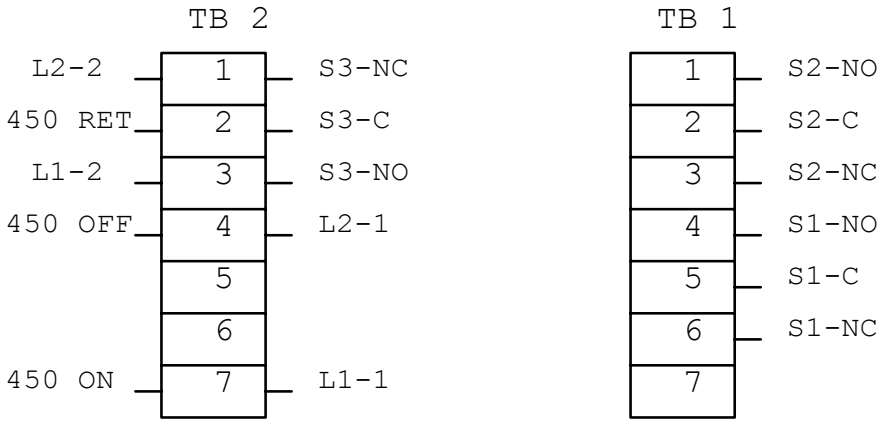

The three diagrams above show the electrical connections required for coil protection using switch 3 (green) with internal L1-2 and L2-2 wires relocated to the listed terminals.

FIGURE 3

SOPV DIAGRAM WITH LETTERED TERMINAL
BOARD INTERNAL WIRES MOVED
TO S-3 FOR COIL PROTECTION

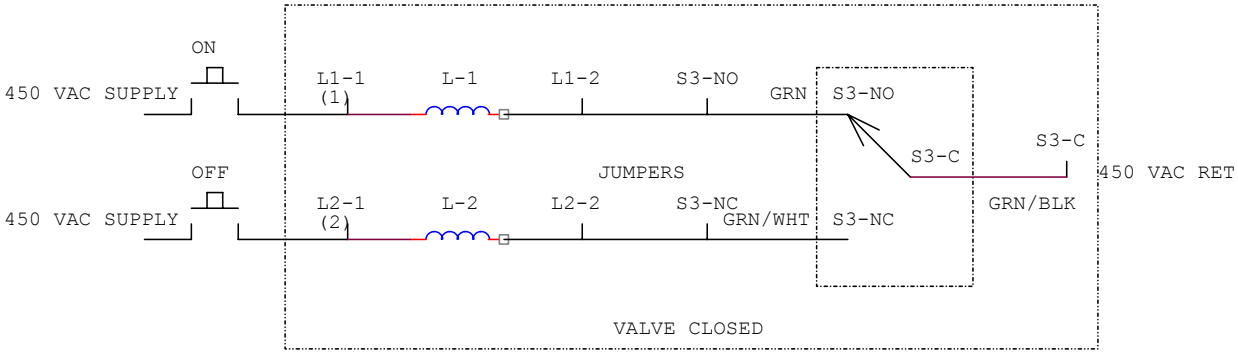

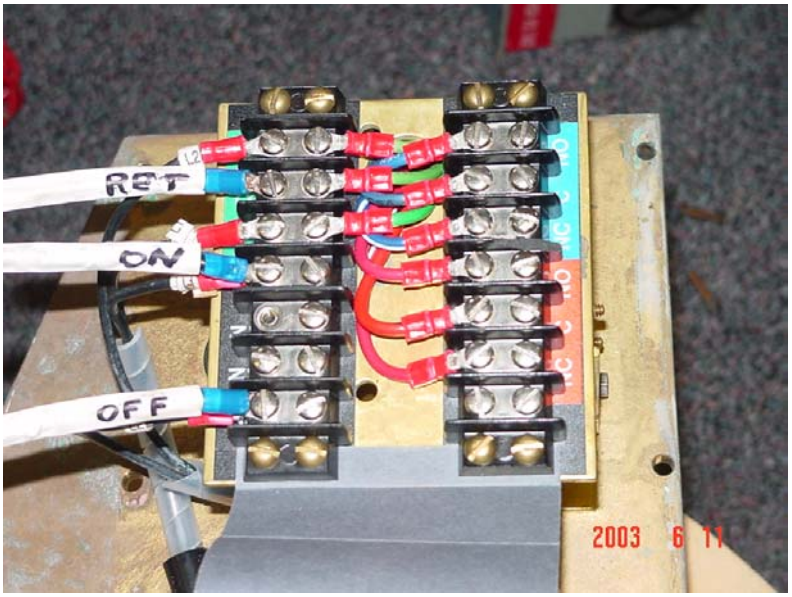

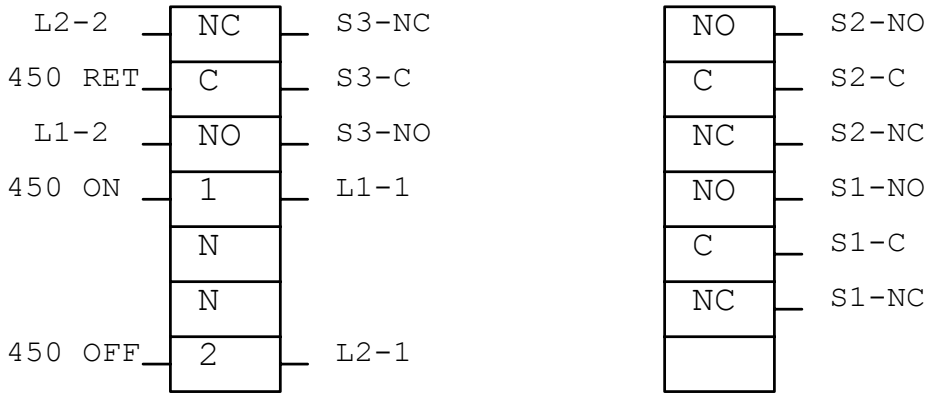

The three diagrams above show the electrical connections required for coil protection using switch 3 (green) with internal L1-2 and L2-2 wires relocated to the listed terminals.

FIGURE 4

CMWD System
SOPV Coil Protection Mods

This procedure includes generic instructions to isolate the CMWD system piping to prevent inadvertent flow during SOPV tests and SOPV coil protection modifications.

This procedure inspects and modifies the SOPV, if possible, so that internal and external wiring utilizes S3 for coil protection and S1 and/or S2 for remote indication.

Safety Precautions.

1. Forces afloat comply with NAVOSH Program Manual for Forces Afloat, OPNAVINST 5100.19 series.
2. Ensure all tag-out procedures are in accordance with current shipboard instructions.
3. Solenoid operated pilot valves may be supplied by more than one power source. Ensure all electrical circuits are de-energized.
4. Consider all electrical leads to be energized until positively proven they are de-energized.

Preliminary.

1. Deviations on procedures and valve alignment are allowed to suit specific ship configuration.
2. Red "Danger" tags shall be used where tag-outs are required. Yellow "Caution" tags may be installed at the discretion of the Damage Control Assistant (DCA).
3. Comply with ship's regulations before accomplishing any modifications.
4. Obtain permission from DCA prior to removing any countermeasure washdown system from the normal readiness condition.
5. Install test cast fittings in sprinkling control valves to prevent sprinkling.

Procedure.

NOTE 1: Work center supervisor review procedure and omit steps/add steps to suit specific installations.

WARNING: Ensure all tag-out procedures are in accordance with current shipboard instructions.

1. De-energize all electrical circuits to applicable solenoid operated pilot valve(s) and tag "Out of Service".

WARNING: Solenoid operated pilot valves may be supplied by more than one power source.

2. Ensure all electrical circuits are de-energized.
3. Remove SOPV cover from baseplate.

WARNING: Consider all electrical leads to be energized until positively proven they are de-energized.

5. Test SOPV electrical circuit with AC/DC multimeter to ensure circuits are de-energized.

NOTE 2: Improper alignment of micro switch used for coil protection can result in premature loss of voltage to solenoid causing failure of valve to fully cycle.

6. Inspect SOPV wiring. Document on data sheet. If all three switches are used for external indication and control, coil protection is not possible and no work is required. If any one of the three switches is not used for external indication and control perform switch adjustment procedure located on drawing 17312 of Solenoid Operated Pilot Valve Model CSM5M-3A technical manual S6435-B1-MMO-010.
7. Visually inspect each SOPV to ensure that the SOPV linkage is properly lubricated, the SOPV is free of corrosion, dirt and debris, the SOPV does not show evidence of seawater leakage around the T-handle inside the cover or show signs of valve leak-by. If any of these conditions exist the SOPV should be cleaned, inspected and lubricated in accordance with PMS MRC C2EB Y (R-18) or replaced, as necessary.

NOTE 3: When installing SOPV cover, ensure wiring is safely stowed away.

8. Re-install SOPV cover.
9. Remove safety tag(s) and energize all electrical circuits to the SOPV.
10. Shut firemain supply cut-out valve to sprinkling control valve.
11. Shut all cut-out valves upstream and downstream of a sprinkling control valve. Where downstream cut-out valves are not installed, ensure that adequate precautions are taken to protect downstream equipment from damage due to residual line drainage.

12. Test the CMWD system prior to SOPV modification to ensure proper operation:

    a. Man the following locations:
        1. SOPV to be tested.
        2. CMWD system pushbutton to be tested.
    b. Establish communications between locations.

WARNING: When operating the CMWD system by remote ON/OFF pushbuttons, do not keep ON or OFF button depressed for more than 3 seconds. In addition, do not cycle the SOPV more than 5 times in 5 minutes. Solenoids are for intermittent duty. Continuous energizing and excessive cycling can cause damage to the solenoid coils.

c. Notify pushbutton operator to actuate demand.
d. Observe that SOPV operates smoothly and properly, and related valve and alarms actuate.
e. Notify the pushbutton operator to secure the CMWD system.
f. Observe that SOPV operates smoothly and properly, and related valve and alarms secure.
g. Record satisfactory operation of each SOPV or any SOPV operational deficiency on the data sheet.

13. Shut firemain supply cut-out valve in control water piping to SOPV.

WARNING: Ensure all tag-out procedures are in accordance with current shipboard instructions.

14. De-energize all electrical circuits to solenoid operated pilot valve(s) and tag "Out of Service".

WARNING: Solenoid operated pilot valves may be supplied by more than one power source.

15. Ensure all electrical circuits are de-energized.
16. Remove SOPV cover from baseplate.

WARNING: Consider all electrical leads to be energized until positively proven they are de-energized.

17. Test SOPV electrical circuit with AC/DC multimeter to ensure circuits are de-energized.

18. Perform SOPV electrical checks and modifications as follows:

    a. If all three switches are used for external indication and control, coil protection is not possible and no work is required. Document on data sheet.
    b. Remove any jumpers associated with coil protection.
    c. Ensure there is no excess cable/wire inside the cover of the SOPV to avoid creation of a shock hazard especially during manual operation of the T-handle, and to avoid interference with movement of the SOPV linkage.
    d. Install wire markers as wiring is modified to agree with final wiring configuration.

e. Relocate any remote indication or control wiring using S3 to S1, or S2 if S1 is used.
f. Modify internal and external wiring to concur with Figures 1 and 3 for numbered terminal boards and Figures 2 and 4 for lettered terminal boards.
g. For each SOPV, record on data sheet whether S1 and/or S2 provides remote indication.

18. Remove safety tag(s) and energize all electrical circuits to the SOPV.

19. Connect a multimeter between the following points on the applicable SOPV.

    a. On SOPVs with numbered terminal boards between TB 2-7 and TB 2-3 (common).
    b. On SOPVs with lettered terminal boards between 1 on terminal feeding L1-1 and SW3-N.O.

WARNING: Keep hands and test leads clear of T-handle during SOPV test.

20. Push any ON pushbutton for the SOPV under test for one second and verify 450 volts on multimeter until the T-handle rotates and power is removed. If SOPV fails to operate, troubleshoot internal and external SOPV wiring and retest.
21. With the SOPV in the Open (actuated) position, move the meter leads as follows:

    a. On SOPVs with numbered terminal boards, move the meter lead connected to TB2-7 to TB2-4 and move the lead from TB2-3 to TB2-1.
    b. On SOPVs with lettered terminal boards, move the meter lead connected to 1 on terminal feeding L1-1 to terminal 2 feeding L2-1 and move SW3-N.O. to SW3-N.C.

WARNING: Keep hands and test leads clear of T-handle during SOPV test.

22. Push any OFF pushbutton for the SOPV under test for one second and verify 450 volts on multimeter until the T-handle rotates and power is removed. If SOPV fails to operate, troubleshoot internal and external SOPV wiring and retest.
23. Disconnect multimeter.

WARNING: Ensure all tag-out procedures are in accordance with current shipboard instructions.

24. De-energize all electrical circuits to solenoid operated pilot valve(s) and tag "Out of Service".

WARNING: Solenoid operated pilot valves may be supplied by more than one power source.

25. Ensure all electrical circuits are de-energized.

WARNING: Consider all electrical leads to be energized until positively proven they are de-energized.

26. Test SOPV electrical circuit with AC/DC multimeter to ensure circuits are de-energized.

NOTE 4: When installing SOPV cover, ensure wiring is safely stowed away.

27. Re-install SOPV cover.
28. Remove safety tag(s) and energize all electrical circuits to the SOPV.
29. Open firemain supply cut-out valve in control water piping to SOPV.
30. Test the CMWD system after SOPV modification to ensure proper operation:

    a. Man the following locations:

        1. SOPV to be tested
        2. CMWD system pushbutton to be tested.

    b. Establish communications between locations.

WARNING: When operating the CMWD system by remote ON/OFF pushbuttons, do not keep ON or OFF button depressed for more than 3 seconds. In addition, do not cycle the SOPV more than 5 times in 5 minutes. Solenoids are for intermittent duty. Continuous energizing and excessive cycling can cause damage to the solenoid coils.

    c. Notify pushbutton operator to actuate demand.
    d. Observe that SOPV operates smoothly and properly, and related valve and alarms actuate.
    e. Notify the pushbutton operator to secure the CMWD system.
    f. Observe that SOPV operates smoothly and properly, and related valve and alarms secure.
    g. Record satisfactory operation of each SOPV or any SOPV operational deficiency on the data sheet.

31. Open firemain supply cut-out valve to sprinkling control valve.
32. Remove test cast fittings from sprinkling control valves.
33. Open all cut-out valves upstream and downstream of a sprinkling control valve.
34. Repeat this procedure including Preliminary steps for each SOPV.
35. Ensure CMWD system is re-aligned for normal firefighting service.
36. Notify maintenance group supervisor that system is in readiness condition.

SOPV DIAGRAM WITH NUMBERED TERMINAL
BOARD INTERNAL WIRES MOVED
TO S-3 FOR COIL PROTECTION

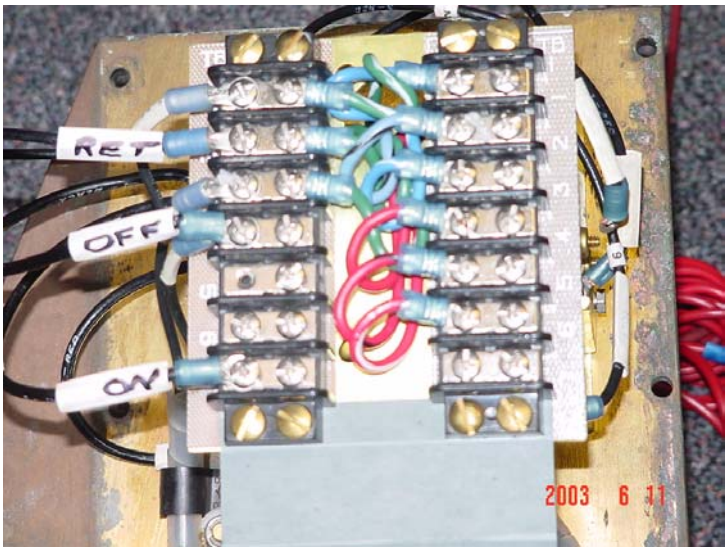

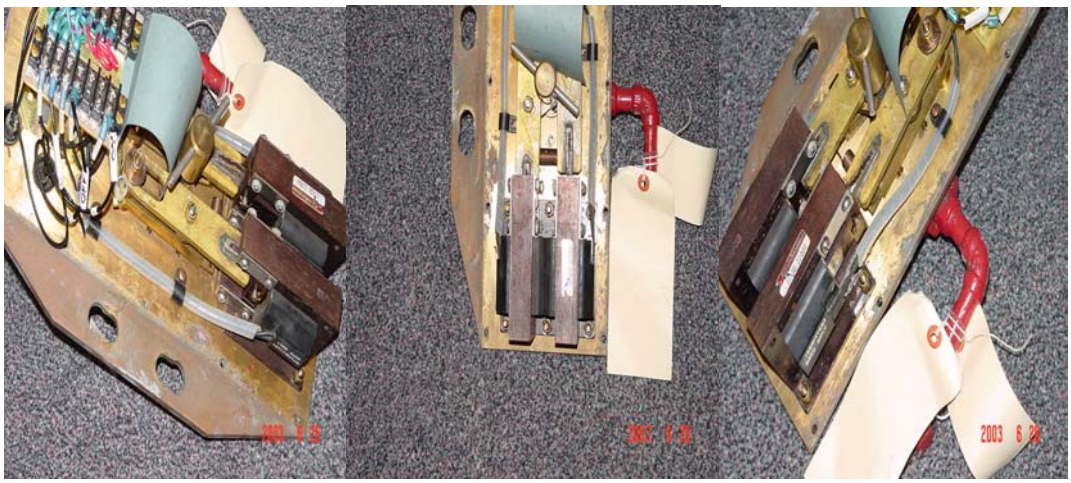

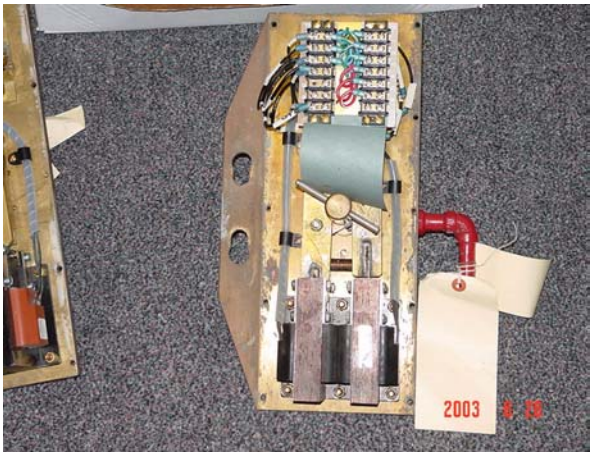

FIGURE 1

SOPV DIAGRAM WITH LETTERED TERMINAL
BOARD INTERNAL WIRES MOVED
TO S-3 FOR COIL PROTECTION

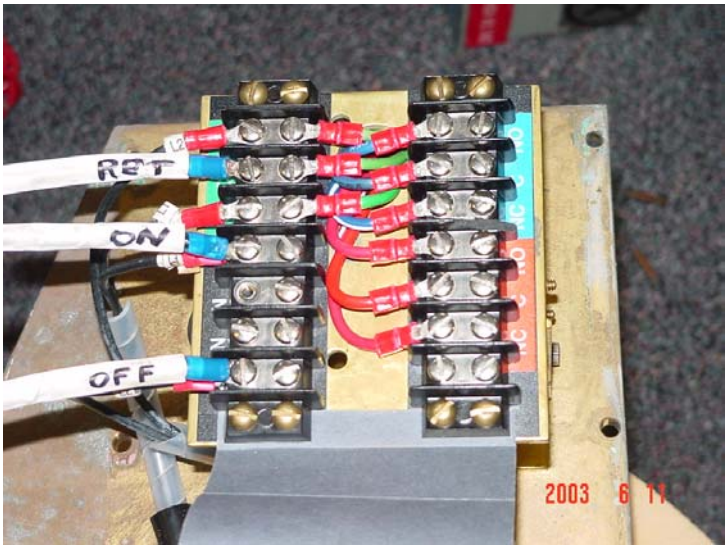

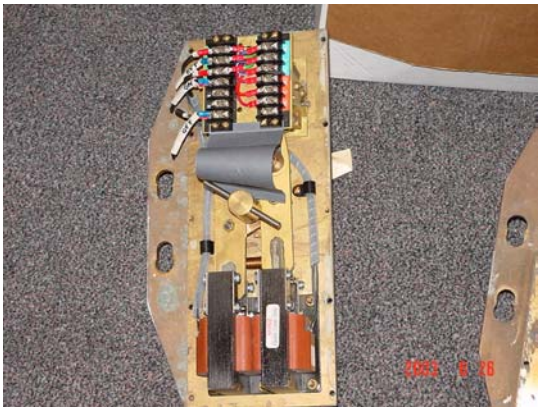

FIGURE 2

SOPV DIAGRAM WITH NUMBERED TERMINAL
BOARD INTERNAL WIRES MOVED
TO S-3 FOR COIL PROTECTION

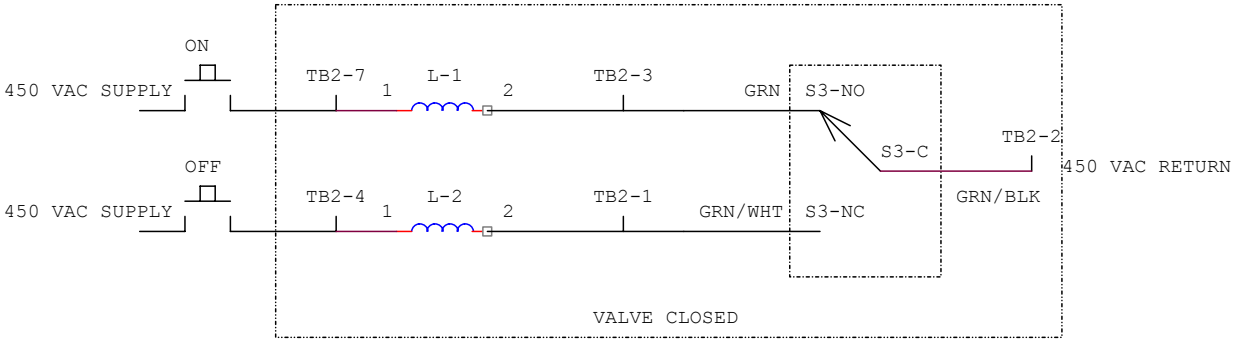

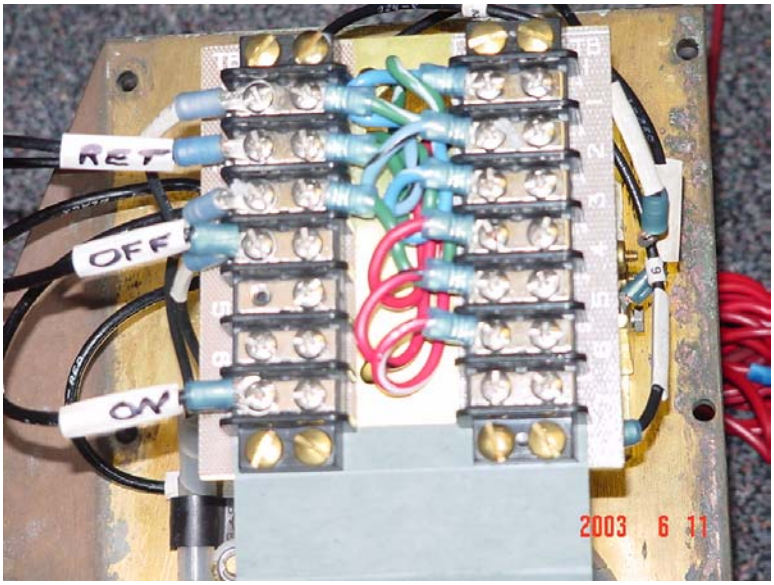

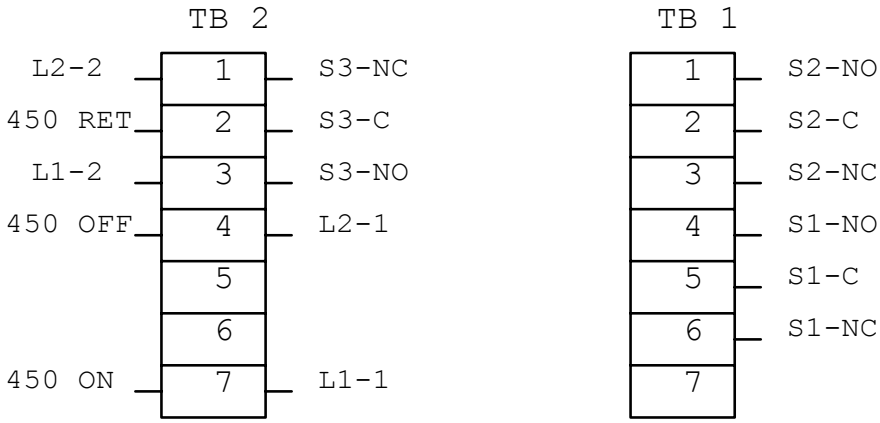

The three diagrams above show the electrical connections required for coil protection using switch 3 (green) with internal L1-2 and L2-2 wires relocated to the listed terminals.

FIGURE 3

SOPV DIAGRAM WITH LETTERED TERMINAL
BOARD INTERNAL WIRES MOVED
TO S-3 FOR COIL PROTECTION

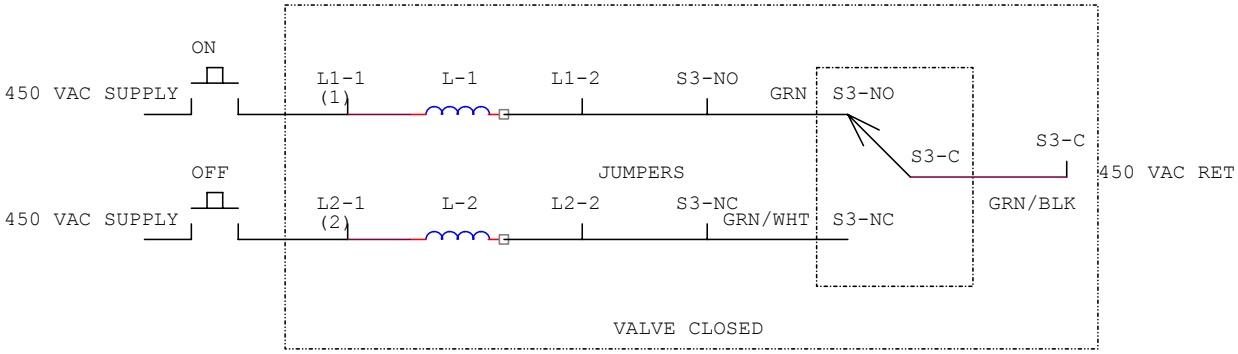

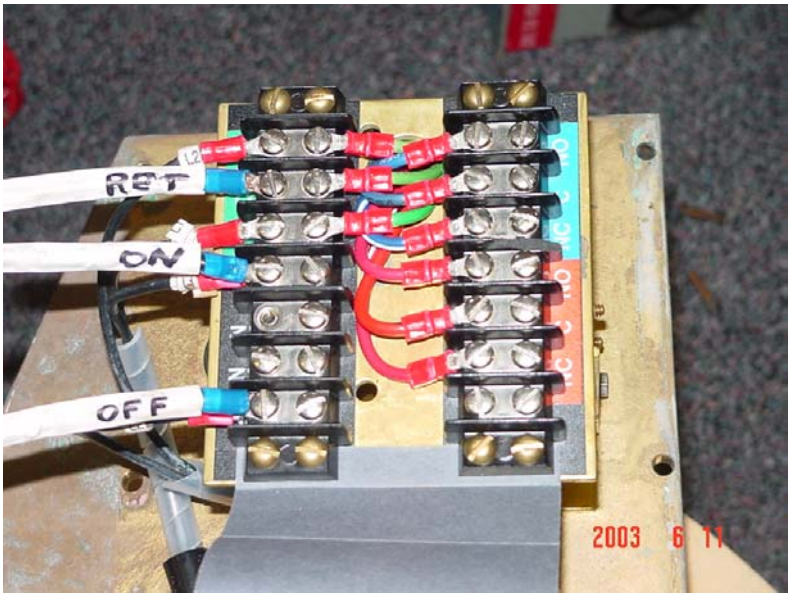

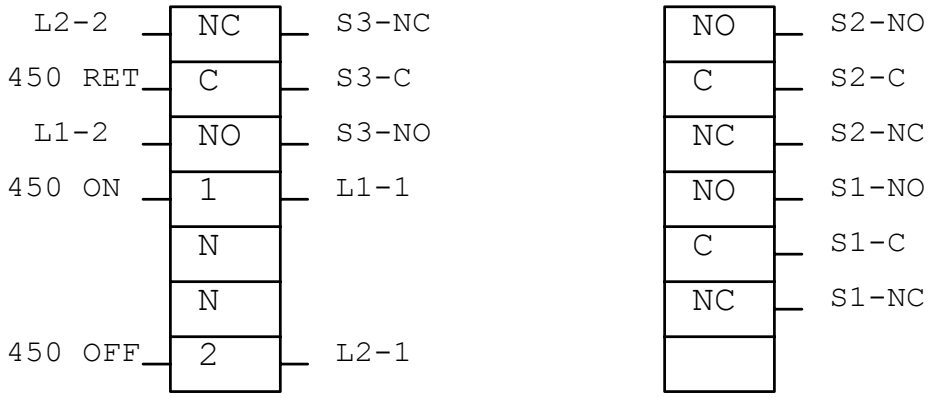

The three diagrams above show the electrical connections required for coil protection using switch 3 (green) with internal L1-2 and L2-2 wires relocated to the listed terminals.

FIGURE 4

SOPV DATA SHEET

Note: Record data for each SOPV.

SOPV Location and Service	SOPV can receive mod (at least one switch available before mod) (Yes/No)	Operation SAT before mod (Yes/No)	Operation SAT after mod (Yes/No)	SW1 used for indication or other purposes (after mod) (Yes/No)	SW2 used for indication or other purposes (after mod) (Yes/No)	Remarks