ST460-AH-OMI-010

TECHNICAL MANUAL

OPERATION AND MAINTENANCE INSTRUCTIONS

ORGANIZATIONAL LEVEL

FOR THE

PRAMAC ES5500X 5.5KW GENERATOR SET

NSN 0910-LP-102-0479

DISTRIBUTION STATEMENT A: APPROVED FOR PUBLIC RELEASE; DISTRIBUTION IS UNLIMITED.

PUBLISHED BY DIRECTION OF COMMANDER, NAVAL SEA SYSTEMS COMMAND

0910LP1020479

TECHNICAL MANUAL

OPERATION AND MAINTENANCE INSTRUCTIONS

ORGANIZATIONAL LEVEL

FOR THE

PRAMAC ES5500X 5.5KW GENERATOR SET

NSN 0910-LP-102-0479

DISTRIBUTION STATEMENT A: APPROVED FOR PUBLIC RELEASE; DISTRIBUTION IS UNLIMITED.

PUBLISHED BY DIRECTION OF COMMANDER, NAVAL SEA SYSTEMS COMMAND

2 February 2004

THIS PAGE INTENTIONALLY LEFT BLANK

DEPARTMENT OF THE NAVY
NAVAL SURFACE WARFARE CENTER PANAMA CITY
110 VERNON AVENUE
PANAMA CITY, FL 32407-7001

IN REPLY REFER TO:

10560
Ser E53/001
10 Feb 04

From: Commanding Officer, Naval Surface Warfare Center Panama City

Subj: APPROVAL AND RELEASE OF PRAMAC ES5500X 5.5KW GENERATOR SET PUBLICATION

Encl: (1) ST460-AH-OM1-010 of 2 Feb 04: Technical Manual, Operation and Maintenance Instructions Orgazational Level for the PRAMAC ES5500X 5.5KW Generator Set

1. The PRAMAC ES5500X 5.5KW Generator Set has been validated and verified and is ready for release as enclosure (1). This manual will be issued with the equipment.

2. The Naval Surface Warfare Center Panama City points of contact are Mr. Mark Black, E53 and Mr. Ken Powell, E50L. They may be reached at commercial (850) 234-4452, (850) 234-4198, DSN 436-4452, 436-4198 respectively.

B. E. Miller
B. E. MILLER
By direction

Copy to: (w/encl)
NAVSEA 05P9 (Mr. Dennis McCrory, Mr. Hank Kuzma)

LIST OF EFFECTIVE PAGES

INSERT LATEST CHANGED PAGES. DESTROY SUPERSEDED PAGES.

NOTE: The portion of the text affected by the changes is indicated by a vertical line in the outer margins of the page. Changes to illustrations are indicated by miniature pointing hands. Changes to diagrams are indicated by shaded areas.

Date of issue for original pages is:

Original. . . . . 2 February 2004

TOTAL NUMBER OF PAGES IN THIS PUBLICATION IS 44, CONSISTING OF THE FOLLOWING:

Page No.	*Change No.	Page No.	*Change No.
Title	0	i thru vi	0
A	0	1 thru 29	0
B Blank	0	30 Blank	0
Change Record	0		

* Zero in this column indicates an original page.

THIS PAGE INTENTIONALLY LEFT BLANK

RECORD OF CHANGES

CHANGE NO.	DATE	TITLE OR BRIEF DESCRIPTION	ENTERED BY

THIS PAGE INTENTIONALLY LEFT BLANK

CONTENTS

Topic/Paragraph **Page**

LIST OF EFFECTIVE PAGES ..... A
CHANGE RECORD ..... n/a
TABLE OF CONTENTS i
LIST OF ILLUSTRATIONS ii
LIST OF TABLES ii
FOREWORD iii
LIST OF ACRONYMS AND ABBREVIATIONS iv
SAFETY SUMMARY v

1. Introduction 1
   1.1 Generator Set Functional Description 1
      1.1.1 Engine 1
      1.1.2 Generator 1
      1.1.3 Fuel Tank 1
      1.1.4 Power Panel 1
      1.1.5 Frame Assembly 1
      1.1.6 Optional Equipment 1
   1.2 Controls and Indicators 1

2. Operation 4
   2.1 Introduction 4
   2.2 Safety Precautions and Guidelines Relating to Operation 4
   2.3 Electrical Loads and Guidelines 5
   2.4 Run Duration 6
   2.5 Fuel Selection and Capacity 6
   2.6 Oil Selection and Capacity 7
   2.7 Initial Starting Procedure 7
   2.8 Operational Procedures 8
   2.9 Shutdown 10
   2.10 Emergency Shutdown 10

3. Troubleshooting 12
   3.1 Troubleshooting Guide 12

4. Maintenance 13
   4.1 General Information 13
   4.2 Scheduled Maintenance 13
   4.3 Corrective Maintenance 13
      4.3.1 Flashing the Field 14
      4.3.2 Removal and Replacement of Recoil Starter Mechanism or Starter Rope 14
      4.3.3 Free Injector Pump Piston 18

5. Parts Lists 22
   5.1 Parts Lists 22

LIST OF ILLUSTRATIONS

Number	Title	Page
1-1	Pramac ES5500X 5.5KW Generator Set Major Sub-Components	2
1-2	Controls and Indicators	3
2-1	Initial Starting Procedure – Opening Bleed Valve	8
2-2	Starting the Engine	9
2-3	Emergency Shutdown	11
4-1	Flashing the Field	14
4-2	Recoil Starter Replacement – Removal Parts	15
4-3	Recoil Starter Replacement – Aligning Ropc Access	15
4-4	Recoil Starter Replacement – Feeding Replacement Rope	16
4-5	Recoil Starter Replacement – Knotting Rope	17
4-6	Recoil Starter Replacement – Recoil Replacement Rope	17
4-7	Free Injector Pump Piston – Disconnecting Fuel Supply Line Quick Disconnect	18
4-8	Free Injector Pump Piston – Removing Fuel Supply Line	18
4-9	Free Injector Pump Piston – Removing Rigid Fuel Line	19
4-10	Free Injector Pump Piston – Removing Nuts/Cover Plate from Injector Pump	19
4-11	Free Injector Pump Piston – Removing Fuel Injector Pump	19
4-12	Free Injector Pump Piston – Open Fuel Shutoff Valve	20
4-13	Free Injector Pump Piston – Free Piston	20
4-14	Free Injector Pump Piston – Shutoff Valve, Correct Placement	21
4-15	Free Injector Pump Piston – Aligning Fuel Shutoff Valve with Center Mark	21
5-1	Generator (Pramac)	23
5-2	Panel Assembly (Pramac)	24
5-3	Ground Assembly (Pramac)	25
5-4	Fuel Tank Assembly (Pramac)	26
5-5	Lube Oil Cap and Plug (Yanmar)	27
5-6	Lube Oil Filter (Yanmar)	28
5-7	Engine Speed Lever Thumbscrew (Yanmar)	28
5-8	Engine Air Cleaner (Yanmar)	29
5-9	AC Wiring Schematic	29

LIST OF TABLES

Number	Title	Page
1-1	Controls and Indicators	2
2-1	Representative DC Equipment for use with Diesel Generator	6
3-1	Troubleshooting for Generator Set	12
4-1	List of Recommended Tools	13

FOREWORD

This technical manual contains operation and maintenance information and procedures for the Pramac ES5500X 5.5KW Generator Set. The information in this manual is presented in five sections: (1) Introduction, (2) Operation, (3) Troubleshooting, (4) Maintenance, and (5) Parts Lists. In addition, a List of Acronyms and Abbreviations and also a Safety Summary precede the five sections.

Ships, training activities, supply points, depots, Naval Shipyards, and Supervisors of Shipbuilding are requested to arrange for the maximum practical use and evaluation of Naval Sea Systems Command (NAVSEA) technical manuals. All errors, omissions, discrepancies, and suggestions for improvements to NAVSEA technical manuals should be forwarded to:

Commander
Naval Surface Warfare Center Division
Code 5B31, Bldg. 1388
4363 Missile Way
Port Hueneme, CA 93043-4307

on NAVSEA Technical Manual Deficiency/Evaluation Report, form NAVSEA 4160/1 or by using the automated TMDER form on-line at **http://nsdsa.phdnswc.navy.mil**. All feedback comments shall be thoroughly investigated and originators will be advised of resulting actions. Form NAVSEA 4160/1 is included at the end of this manual. Additional copies of form NAVSEA 4160/1 may be requisitioned from the Standardization Documents Order Desk, Building 4D, 700 Robbins Avenue, Philadelphia, PA 19111-5094.

LIST OF ACRONYMS AND ABBREVIATIONS

AC ..... Alternating Current
amps ..... ampere
API ..... American Petroleum Institute
AWG ..... American Wire Gage
CAGE ..... Commercial and Government Entity
DC ..... Damage Control, Direct Current
EPA ..... Environmental Protection Agency
GFCI ..... Ground Fault Circuit Interrupter
Hz ..... Hertz
IAW ..... In Accordance With
kw ..... kilowatt
mm ..... millimeter
MRC ..... Maintenance Requirements Card
NATO ..... North Atlantic Treaty Organization
NPT ..... National Pipe Thread
NSN ..... National Stock Number
PECU ..... Portable Exothermic Cutting Unit
PMS ..... Planned Maintenance System
QD ..... Quick Disconnect
RPM ..... Revolutions Per Minute
TMDER ..... Technical Manual Deficiency/Evaluation Report
V ..... Volts
VAC ..... Volts Alternating Current
VDC ..... Volts Direct Current

SAFETY SUMMARY

1. SAFETY DEFINITIONS

Read and understand all aspects of this manual before operating the generator set. Pay special attention to warnings, cautions, and notes:

WARNING

An operating or maintenance procedure, practice, condition, or statement, which, if not strictly observed, could result in injury or death of personnel.

CAUTION

An operating or maintenance procedure, practice, condition, or statement, which, if not strictly observed, could result in damage to or destruction of equipment, loss of mission effectiveness, or long-term health hazards to personnel.

NOTE

An essential operating or maintenance procedure, condition, or statement which must be highlighted.

2. GENERAL WARNINGS AND CAUTIONS

The following warnings and cautions apply to operation and maintenance of the generator set in general and do not pertain to specific operation or maintenance procedures. Warnings and Cautions that apply to specific steps during operation and maintenance of the system appear directly before those steps in the technical manual.

WARNING

The generator set is designed to give safe and dependable service, provided that it is operated according to instructions. Read and understand this manual before operating the generator unit. Failure to do so could result in personal injury or equipment damage.

WARNING

The generator set produces electrical current. Therefore, safety guidelines must be followed. Improper use of this generator can result in electrocution, injury, or death. Do not operate, service, or repair this generator unless fully qualified to do so.

WARNING

Do not tamper with the engine-governed speed. The generator operates at a nominal speed of 3600 RPM. Increases in speed over the nominal 3600 RPM will increase the chance of personal injury due to rotational stresses on the rotating members. Operation of the generator at speeds below the nominal 3600 RPM could cause damage to the generator or driven equipment due to low voltage output.

WARNING

Do not modify or misapply generator set. Operation of the generator other than as intended could result in generator set damage, bodily injury, or death from electrocution.

CAUTION

Do not exceed the rated capacity of the generator. The total electrical loads at each outlet must be added to determine the total electrical load. The total load must not exceed the rated capacity of the generator. If the driven equipment does not list wattage, but only amperage, wattage may be determined by multiplying amperage times voltage (watts = amps x volts).

1. INTRODUCTION

1.1 GENERATOR SET FUNCTIONAL DESCRIPTION

The Pramac ES5500X 5.5KW Generator Set provides power for electrical equipment within its design output limitations. The generator produces single-phase, 115 VAC, 60 Hz electrical power, and is equipped with two 20-amp circuit breakers and four GFCI duplex outlets. The generator's "continuous" rating is 4950 watts at 41.3 amps, and its "surge" rating is 5500 watts at 45.8 amps. The system consists of five major sub-components (Figure 1-1), including the engine, generator, fuel tank, power panel, and frame assembly. The generator set weighs 238 pounds; its overall footprint is 22-1/4" wide, 23" high, and 32" long.

1.1.1 Engine. The Yanmar L100EE engine is an air-cooled, single cylinder, four-cycle diesel engine rated at 10 horsepower. Ignition is achieved by direct injection of fuel, and compression is initially aided by a compression release lever to help overcome the 19.3 compression ratio. The engine is started by a recoil-type starter and is cooled by forced air, which is generated by a flywheel fan.

1.1.2 Generator. The generator is designed to produce electrical energy for the purpose of powering lights, tools, appliances, and motor loads within the design constraints of the generator (single-phase electrical power at 115 VAC).

1.1.3 Fuel Tank. The 8-gallon capacity, removable fuel tank is mounted to the generator set frame. The fuel tank assembly consists of the tank, fuel valve, vented cap, fuel supply line, fuel return line, quick-disconnect couplings, and a fuel filter. The fuel filter is an in-line paper element type.

1.1.4 Power Panel. The power panel consists of four 115 VAC electrical duplex outlets, two 20-amp circuit breakers, and an hour meter. There is a GFCI located on each of the four outlets.

1.1.5 Frame Assembly. The generator set is housed in a steel frame assembly which is 22-1/4" wide, 23" high, and 32" long. Using the frame assembly, the generator set is two-person portable.

1.1.6 Optional Equipment. A mobility kit is available for the diesel generator, and consists of wheels, lifting handles, and the appropriate mounting hardware.

1.2 CONROLS AND INDICATORS

Table 1-1 and Figure 1-2 describe the controls and indicators used on the generator set.

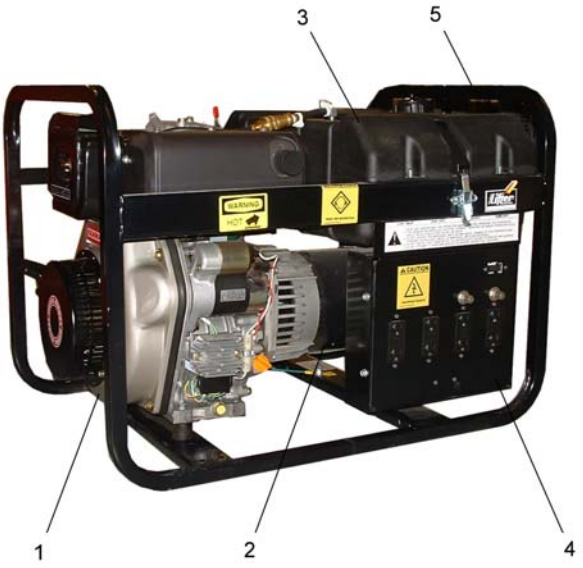

No.	Part
1	Engine
2	Generator
3	Fuel Tank Assembly
4	Power Panel
5	Frame Assembly

Figure 1-1. Pramac ES5500X 5.5KW Generator Set Major Sub-Components

Table 1-1. Controls and Indicators

No.	Control/Indicator	Function
1	20-amp Circuit Breaker (qty 2)	Protects electrical circuitry from overload.
2	GFCI (qty 4)	Provides safety in case of an electrical short in the equipment being run with the generator.
3	Decompression Lever	Used to reduce compression in starting the engine and for emergency shutdown.
4	Fuel Shutoff Valve	Turns fuel on/off from the tank to the engine.
5	Bleed Valve	Used to bleed air from fuel line.
6	Engine Speed Lever	Controls engine speed and used to shutdown engine.
7	Hour Meter	Records total run time on generator.

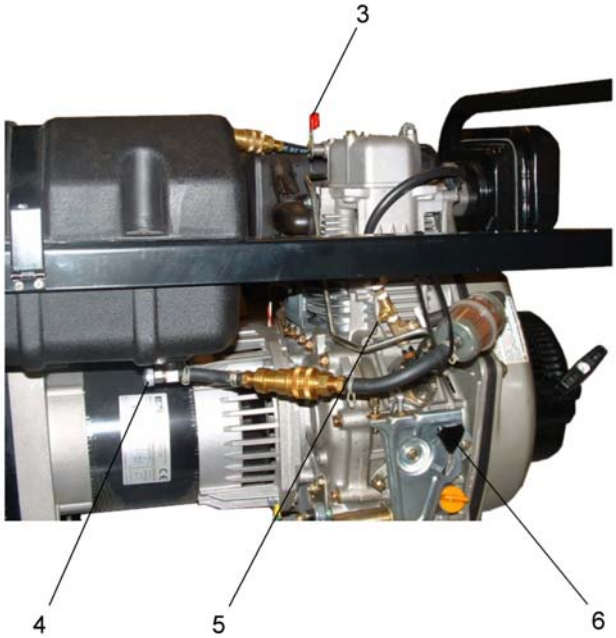

No.	Part
1	20-amp Circuit Breaker (qty 2)
2	GFCI (qty 4)
3	Decompression Lever
4	Fuel Shutoff Valve
5	Bleed Valve
6	Engine Speed Lever
7	Hour Meter

Figure 1-2. Controls and Indicators

2. OPERATION

2.1 INTRODUCTION

The following paragraphs describe operation of the generator set, including safety precautions and guidelines relating to operation, electrical loads, run duration, fuel and oil selection and capacity, operational steps, shutdown procedures, and emergency shutdown.

2.2 SAFETY PRECAUTIONS AND GUIDELINES RELATING TO OPERATION

The following safety precautions relate to operating the generator, and include precautions for preventing fires and burns. Be sure to also review all general safety precautions outlined in the Safety Summary, located in the front matter of this technical manual.

WARNING

To prevent fire hazards and to provide adequate ventilation, keep the generator set away from buildings and other equipment during operation.

Fuel is flammable, and its vapors are explosive. Handle fuel with care. Failure to properly handle it can result in explosion or fire. Do not permit smoking within 50 feet of generator set.

Fuel spillage onto engine or generator could result in an explosion or fire.

Never touch a receptacle or bare wire. Electrocution or shock could result.

Never handle extension cords or electrical circuits if standing in water or if standing in a damp area.

Never touch the muffler, muffler cover, or engine body while the engine is running or hot. Exhaust systems can cause severe burns.

Keep hands, body parts, hair, and clothing well away from the rotating or hot parts of the generator.

Know how to stop the engine quickly and understand how to operate all of the controls. Never permit anyone to operate the engine without proper instruction.

Do not place the generator indoors while the engine is still hot.

Do not store generator fuel tank assembly in any location where fumes could potentially come into contact with sparks, a pilot light, or an open flame. Improper storage could result in an explosion or fire.

CAUTION

When moving or transporting generator, take proper precautions to avoid fuel spillage. Always use common sense when lifting this generator. An adequate number of people and proper lifting procedures must be used.

Do not install generator in an enclosed area; always ensure that at least 6 feet of clearance on all sides of generator are maintained during operation. Failure to do so could damage generator and potentially lead to fire.

Operate the generator set on a level surface. The allowable inclination of the engine for continuous use is within 20 degrees of level.

Do not overload the generator. Overloading the generator can cause generator damage, powered equipment damage, and excessive heat build up.

Always make sure that equipment is disconnected from the generator or turned OFF before starting the generator.

Use only proper extension cords in good condition and make sure that the wire size of extension cords is of sufficient size to safely carry the surge output of the generator.

NOTE

Do not operate generator unless it is in good mechanical and electrical condition.

Read and understand all general safety operational guidelines and rules before operating this generator.

Operate, service, or fill with fluids on a level surface.

2.3 ELECTRICAL LOADS AND GUIDELINES

CAUTION

Any generator overload can cause serious damage to generator. The total wattage requirements, including start-up loads, must never exceed the surge rating of the generator (5.5 KW).

Care must be taken to ensure that wattage requirements of equipment to be powered by the generator do not exceed performance specifications. Electric motors can require higher wattage requirements at start-up than when running. Although the start-up wattage requirement for electric motors lasts only a few seconds, it may be as much as 3-4 times the rated wattage at start-up. Refer to the label on electrical equipment to determine its requirements. Table 2-1 includes a representative list of Damage Control equipment that may be used with the generator,

and describes equipment type, rated amps, and wattage. Use this table for guidance so that combined equipment usage does not exceed the recommended wattage (4950 watts) and/or amps for the generator at any given time. Each duplex receptacle is rated for 20 amps; usage must not exceed a total of 40 amps for the generator.

Table 2-1. Representative DC Equipment for use with Diesel Generator

Equipment	NSN	Watts	Rated Amps
Circular Saw (Heavy Duty, ship)	5130-00-880-8991	1500	13
Box Fan	4140-01-272-6060	690	6
PECU	4240-01-272-3841	220	2
Drill, ½”	--	690	6
Emergency DC Lights	--	500	4.4
Flood Lantern	6230-00-643-3661	250	2.3
Explosive Proof Light	6230-00-701-2947	60	1
CP 95	--	575	5
Portable Electric Access and Rescue (PEARS) Battery-Powered “Jaws of Life”	--	460	4
WICS/SWICS	--	370	3.2
Laptop Computer	--	175	1.5

2.4 RUN DURATION

The generator will run approximately 23 hours at half load with a full tank of fuel. During periods of extended operation, occasionally monitor the fuel tank level. Refueling may be necessary. Extreme caution is required when refueling a hot or running engine. An additional crewmember must stand by with an appropriate fire extinguisher in the event that fuel is inadvertently spilled on hot engine parts.

2.5 FUEL SELECTION AND CAPACITY

The generator set is able to operate using commercial Grade 2 diesel fuel, NATO Symbol F-76 or JP-5. Capacity of the fuel tank (which is removable) is 8 gallons. Be sure to keep dust and water out of the fuel; fuel system clogging often causes sudden engine stops after starting. Be sure to follow these safety precautions before selecting fuel for the engine:

WARNING

Except under emergency conditions, never add fuel to the fuel tank while the engine is running. When emergency refueling becomes necessary, a second person shall standby with an appropriate fire extinguisher. Wipe away all fuel spills with a clean cloth. Keep explosives and flammables away from the engine since the temperature around the exhaust muffler is extremely high during operation.

CAUTION

Only use the recommended fuel. Use of non-recommended fuel may cause clogging in the fuel oil strainer, fuel injection pump, and fuel injection nozzle.

NOTE

Use of JP-5 will result in an approximate 10% decrease in engine power and may produce greater than normal engine smoke. Continued use of JP-5 will void the EPA certification.

Fuel should have a cetane value of more than 45 to prevent difficult starting, misfiring, and white exhaust smoke.

NOTE

Diesel fuel oil substitutes are not recommended; they may be harmful to the fuel system components.

The generator is stowed out of the weather in an easily-accessible location, while the detachable fuel tank is stowed separately in an approved fuel storage location.

2.6 OIL SELECTION AND CAPACITY

Nothing affects performance and durability of the engine more than the lube oil used. If inferior oil is used or if the engine oil is not changed regularly, the risk of piston seizure; piston ring sticking; and accelerated wear of cylinder liner, bearings, and other moving components increase significantly. Engine life may be seriously shortened. **The recommended engine lube oil is API grade CC or CD, MIL-L-2104.** Always use oil with the right viscosity for the ambient temperature in which the engine is being operated. The lube oil capacity is 1.65 liters (1.74 quarts).

2.7 INITIAL STARTING PROCEDURE (FIGURE 2-1)

The Pramac ES5500X 5.5KW Generator Set is shipped with the fuel supply line and fuel filter attached to the frame assembly with a plastic tie. To prevent difficulty in starting the generator set for the first time, the fuel supply line must be bled of all air in accordance with the following procedure. The procedure may also be used upon start-up after the equipment has been idle for a lengthy period of time.

(1) Open bleed valve at the injector pump (Figure 2-1) until all air bleeds from the filter.

(2) Using normal starting procedures (paragraph 2-8), start the engine and let run until it runs smoothly.

(3) Close bleed valve.

Figure 2-1. Initial Starting Procedure – Opening Bleed Valve

2.8 OPERATIONAL PROCEDURES (FIGURE 2-2)

WARNING

To prevent injury to personnel, do not operate the generator in confined spaces.

CAUTION

Hearing protection is required in the immediate area of the generator set while in operation.

(1) Ensure all required scheduled maintenance has been performed prior to starting the engine.

(2) Ensure the fuel tank (1) is secured, the fuel supply and return lines are connected (2), and that an adequate amount of fuel is in the tank (3). Add fuel as needed.

NOTE

When checking the oil, check the engine on a level surface with the engine stopped. Dip the dipstick into the oil pan without screwing in the dipstick.

(3) Using dipstick, check the oil level; add oil at the oil filler port (4) as needed.

(4) Ensure no equipment is connected to the generator at the power panel (5).

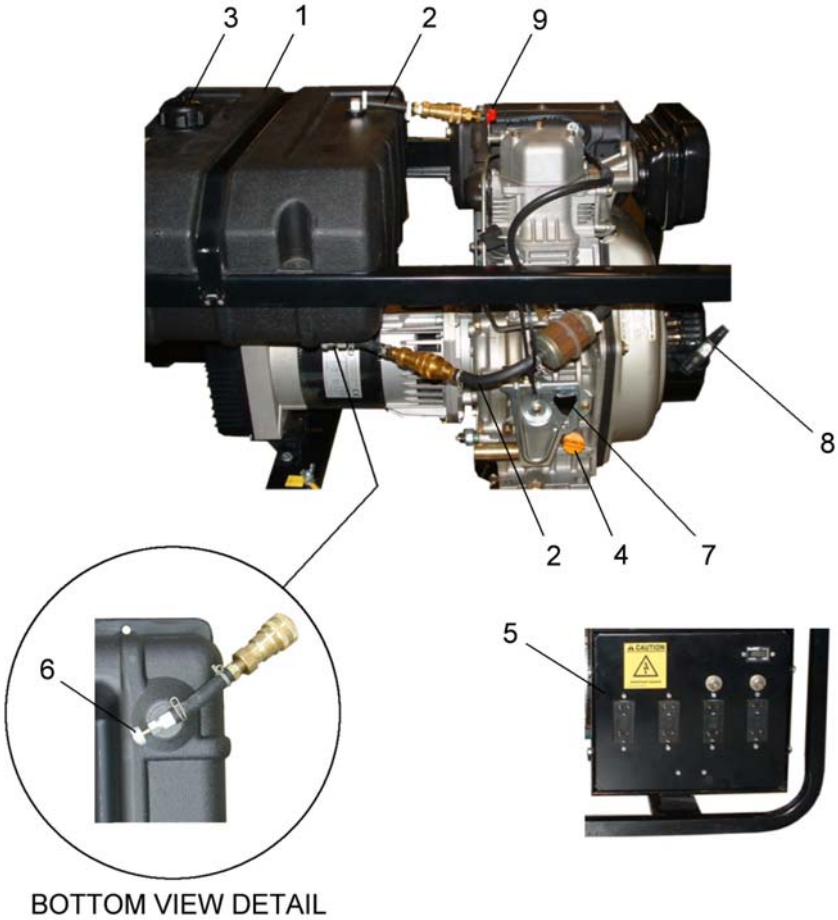

No.	Part
1	Fuel Tank
2	Fuel Supply/Return Lines
3	Fuel Filler Port
4	Oil Filler Port
5	Power Panel
6	Fuel Valve
7	Engine Speed Lever
8	Recoil Starter Rope
9	Decompression Lever

Figure 2-2. Starting the Engine

(5) Open fuel valve (6) located on bottom of fuel tank by turning counter clockwise.

(6) Set the engine speed lever (7) to “START” and lock in position.

(7) Slowly pull on the recoil starter rope (8) until strong resistance is felt.

(8) Push the decompression lever down (9), ensuring that it remains down. The decompression lever will spring to its original position when the engine rotates during starting.

CAUTION

A strong deliberate pull is required to prevent engine kickback and possible starting in the reverse rotational direction. If this occurs, immediately shut down the engine. Operation in the reverse direction is evident by exhaust gases coming out of the intake filter. Reverse operation does not allow full power operation and will cause damage to the engine.

NOTE

If the engine doesn't start, it is likely that the injector pump piston is jammed; free IAW troubleshooting table (Section 3) and Corrective Maintenance Procedures (Section 4).

(9) Start the engine by exerting a strong deliberate pull on the recoil starter rope (8).

(10) Plug equipment in power panel (5), as required.

2.9 SHUTDOWN (FIGURE 2-2)

CAUTION

Disconnect all equipment prior to shutdown. If the generator is shut down with equipment attached, the generator capacitor could discharge, resulting in the generator failing to generate 115 VAC power.

(1) Unplug all equipment from the generator.
(2) Move the engine speed lever (7) to "STOP" and lock in position.

(3) Turn the fuel valve (6) OFF.

(4) After the engine stops, slowly pull recoil starter rope (8) until pressure is felt. Leave in this position to prevent rust from forming while not in use.

(5) Check engine oil after every run; refill if necessary (4) in accordance with PMS.

(6) Fill fuel tank in accordance with PMS.

2.10 EMERGENCY SHUTDOWN (FIGURE 2-3)

Perform emergency shutdown procedure in the order provided. Perform troubleshooting (Section 3) to find cause of failure and maintenance (Section 4) to remedy the problem before attempting to operate the generator unit again.

(1) Move engine speed lever (1) to STOP position.
(2) Push down the decompression lever (2) and hold until the engine stops.

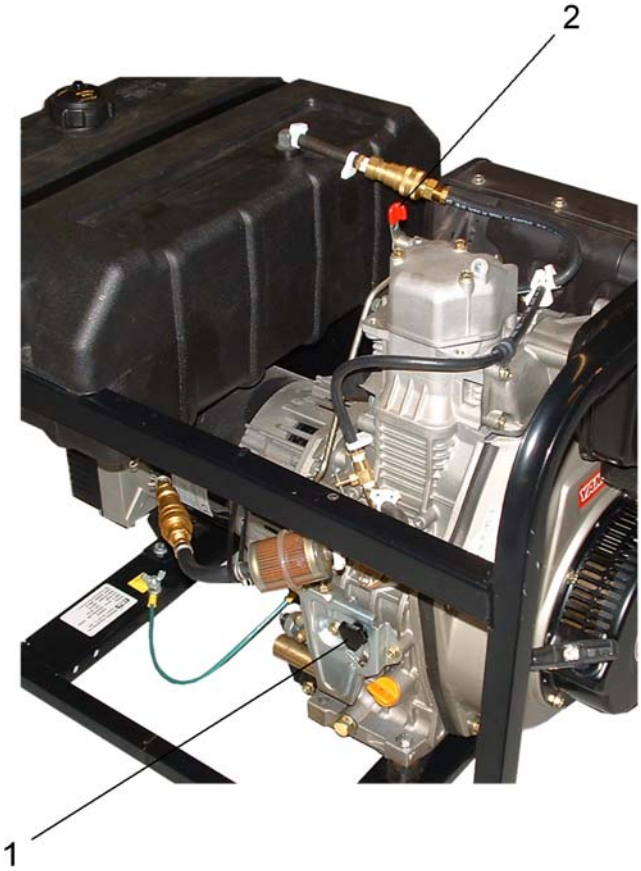

No.	Part
1	Engine Speed Lever
2	Decompression Lever

Figure 2-3. Emergency Shutdown

3. TROUBLESHOOTING

3.1 TROUBLESHOOTING GUIDE

Table 3-1 outlines troubleshooting procedures for the generator, including symptoms, probable causes, and corrective actions.

Table 3-1. Troubleshooting for Generator Set

Symptom	Probable Cause	Corrective Action
Engine Doesn't Start	Fuel tank empty.	Add fuel IAW **scheduled maintenance procedures**.
	Fuel shutoff valve is closed.	Ensure fuel shutoff valve is open.
	Clogged or dirty air filter.	Replace air filter IAW **scheduled maintenance procedures**.
	Air in fuel line.	Bleed air from fuel line IAW **paragraph 2.7**.
	Piston stuck in injector pump.	Free piston IAW **paragraph 4.3.3**.
Engine Speed Decrease (reduced power output)	Possible overload.	Reduce load (reset GFCI circuit breaker, if necessary) **IAW paragraph 2.3**.
	Air or fuel filter clogged.	Replace filter(s) as necessary IAW **scheduled maintenance procedures**.
	Fuel contaminated.	Replace fuel IAW **scheduled maintenance procedures**.
No Voltage	Tripped GFCI.	Reduce load (reset GFCI, if necessary) IAW **paragraph 2.3**.
	Tripped Circuit Breaker.	Reduce load (reset breaker, if necessary) IAW **paragraph 2.8**.
	Loss of residual magnetism.	"Flash the Field" IAW **paragraph 4.3.1**.
Correct No-Load Voltage, Low Loaded Voltage	Possible overload.	Reduce load (reset breaker, if necessary) IAW **paragraph 2.3**.
Excessive Heat	Blocked ventilation.	Check ventilation openings.
	Possible overload.	Reduce load (reset breaker, if necessary) IAW **paragraph 2.3**.
Unstable Voltage	Possible loose connection.	Check connections.

4. MAINTENANCE

4.1 GENERAL INFORMATION

WARNING

Shut off the engine before performing any maintenance on the generator. If the engine must be kept running because of emergency conditions, ensure the area is well ventilated. The exhaust contains poisonous carbon monoxide gas.

When performing maintenance on the generator, be sure to observe the following:

- Practice all related safety precautions.
- Use only approved replacement parts.
- Update the generator hour-meter log whenever maintenance is performed.

4.2 SCHEDULED MAINTENANCE

Refer to the Maintenance Requirements Card (MRC) package for detailed procedures of scheduled maintenance for the Pramac 5.5KW Generator Set.

4.3 CORRECTIVE MAINTENANCE

Corrective maintenance for the generator is limited to "flashing the field" when there is no voltage from the generator, removal and replacement of the recoil starter mechanism or starter rope, and freeing a jammed injector pump piston. Any other corrective maintenance requirements will result in replacement of the unit. A list of recommended tools for use in corrective maintenance is listed in Table 4-1.

Table 4-1. List of Recommended Tools

Item	Tool Name	Description
1	Battery	Lantern
2	Lead Wires	16", quantity 2
3	Pliers, needle-nose	As required
4	Socket	10 mm with 3/8" drive ratchet, 4" extension
5	Wrench	10 mm open-end
6	Wrench	17 mm open-end

4.3.1 Flashing the Field (Figure 4-1).

WARNING

When flashing the field, do not insert leads into the electrical outlets for more than one second. Failure to comply could result in damage to equipment and personal injury.

NOTE

When connecting the DC source to the AC outlet, polarity is not critical.

To flash the field, connect a 4.5-12 VDC source (such as a lantern battery) as follows: using two pieces of wire connected to the positive and negative leads, insert the leads into any of the electrical outlets for one second while the generator is running. Continue with normal operation of the generator.

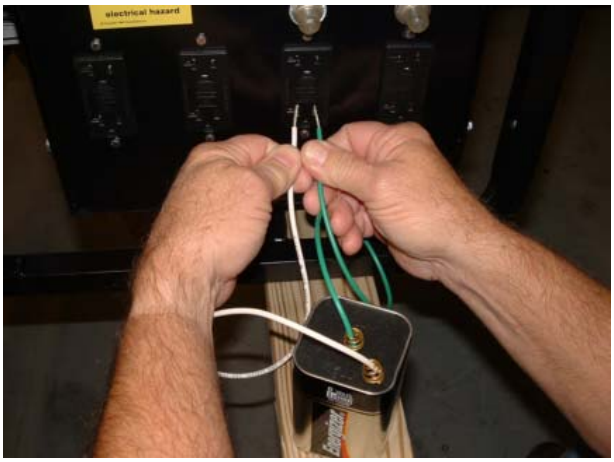

Figure 4-1. Flashing the Field

4.3.2 Removal and Replacement of Recoil Starter Mechanism or Starter Rope (Figures 4-2 – 4-6).

If the recoil starter mechanism is faulty, replace in accordance with the following steps. Note that just the starter rope can be replaced if necessary, as indicated in the procedure.

4.3.2.1 Removal (Figure 4-2).

(1) Note position of the recoil starter (1) in relation to the engine.

(2) While supporting the recoil starter (1), use a 10 mm wrench to remove the four bolts (2) mounting the starter to the engine. Move the recoil starter (1) out and away from the engine.

(3) If the starter mechanism is faulty, obtain a new starter mechanism and rope assembly. Proceed to 4.3.2.2, Replacement, step 6.

(4) If only the starter rope is to be replaced, place the starter mechanism on a suitable working surface with the inside of the starter mechanism facing up.

No.	Part
1	Recoil Starter (P/N 114660-76050)
2	Bolt
3	Starter Rope (P/N 160810-76630)

Figure 4-2. Recoil Starter Replacement – Removal Parts

WARNING

Do not remove the center screw in the recoil starter mechanism. The flywheel mechanism containing the starter rope is spring-loaded and, if released, can cause personal injury.

(5) Pull the starter rope (Figure 4-3) until it is fully extended.

Figure 4-3. Recoil Starter Replacement – Aligning Rope Access

NOTE

Have another person hold the flywheel in place after the rope is fully extended so it does not recoil during rope replacement.

(6) Align the flywheel assembly rope access opening with the opening in the starter mechanism housing.

(7) Remove damaged starter rope by cutting the rope or untying the knot at the flywheel end.

4.3.2.2 Replacement.

NOTE

If the starter rope is frayed or completely missing, turn the flywheel counterclockwise approximately 6 or 7 times prior to installation. This will put necessary spring tension on the spring to recoil the rope after pulling it.

(1) Feed the loose end of the new rope through the rope guide on the housing and through the opening in the flywheel (Figure 4-4).

Figure 4-4. Recoil Starter Replacement – Feeding Replacement Rope

(2) Tie one overhand knot in the end of the rope, leaving approximately ½” of rope after the knot (Figure 4-5). Push the knot and ½” of the rope into the small rectangular area on the flywheel to ensure it doesn’t catch after the starter mechanism replacement.

Figure 4-5. Recoil Starter Replacement – Knotting Rope

(3) Pull the rope taut so there is no slack between the flywheel and the housing.

(4) Slowly allow the spring action to recoil the new rope onto the flywheel. There should be no slack in the rope and the starter rope handle should be snug against the housing. (Figure 4-6)

Figure 4-6. Recoil Starter Replacement – Recoil Replacement Rope

(5) If the rope handle does not fit snug against the housing, remove the rope and tighten the flywheel spring by increasing the number of turns counterclockwise prior to installing the new rope. Usually one more turn will increase spring tension sufficiently.

(6) Place the new recoil starter (Figure 4-2, 1) on the engine in the same position that it was removed (9:00 position).

(7) Align mounting holes and insert all four mounting bolts (2). After all four bolts are in place, tighten using 10mm wrench.

(8) Slowly pull starter rope (3) to ensure it operates properly.

4.3.3 Free Injector Pump Piston (Figures 4-7 - 4-15). If the generator engine does not start, one probable cause is that the piston in the injector pump is stuck at the top of its cycle. Free the piston in accordance with the following steps.

4.3.3.1 **Removal.**

(1) Disconnect fuel supply line QD (Figure 4-7).

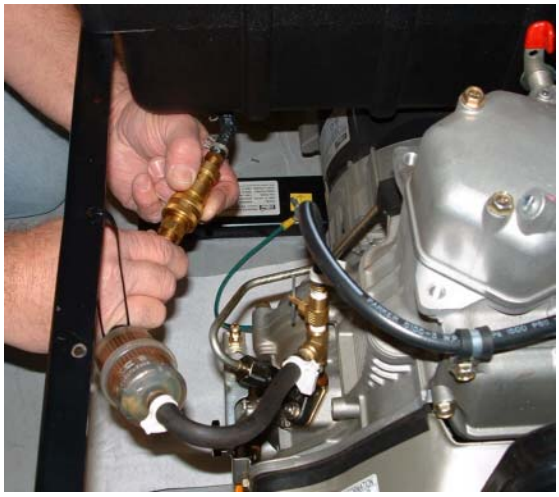

Figure 4-7. Free Injector Pump Piston – Disconnecting Fuel Supply Line Quick Disconnect

(2) Using needle-nose pliers, remove fuel supply line and air bleed line at injector pump and feed through tie-wrap circle; set fuel supply line aside (Figure 4-8).

Figure 4-8. Free Injector Pump Piston – Removing Fuel Supply Line

(3) Using 17 mm open-end wrench, remove rigid fuel line at injector pump (Figure 4-9).

Figure 4-9. Free Injector Pump Piston – Removing Rigid Fuel Line

(4) Using 10 mm socket with 3/8" drive ratchet and 4" extension, remove three nuts on injector pump; on bottom nut, also remove cover plate (Figure 4-10). Remove fuel injector pump (Figure 4-11).

Figure 4-10. Free Injector Pump Piston – Removing Nuts/Cover Plate from Injector Pump

Figure 4-11. Free Injector Pump Piston – Removing Fuel Injector Pump

4.3.3.2 **Free Piston.**

(1) Ensure fuel shutoff valve (on injector pump) is OPEN (slide right) (Figure 4-12).

Figure 4-12. Free Injector Pump Piston – Open Fuel Shutoff Valve

(2) Reattach fuel supply line and air bleed line to injector pump; reconnect fuel supply line QD.

(3) As fuel is flowing, free piston by firmly pressing injector pump spring on flat hard surface several times (Figure 4-13).

Figure 4-13. Free Injector Pump Piston – Free Piston

(4) Disconnect fuel supply line QD; detach fuel supply line and air bleed line from injector pump.

4.3.3.3 **Replacement.**

(1) Replace injector pump, ensuring shutoff valve is positioned between guide (Figure 4-14).

Figure 4-14. Free Injector Pump Piston – Shutoff Valve, Correct Placement

(2) Replace two upper nuts; tighten.
(3) While looking through cover plate opening, actuate Engine Speed Lever to ensure fuel shutoff valve is positioned correctly (between the guide). Using Engine Speed Lever, position fuel shutoff valve so that it is aligned with the center mark (Figure 4-15).

Figure 4-15. Free Injector Pump Piston – Aligning Fuel Shutoff Valve with Center Mark

(4) Replace bottom nut and cover plate.
(5) Replace rigid fuel line at injector pump.
(6) Feed fuel supply line through tie-wrap circle and reattach at injector pump.
(7) Reconnect fuel supply line QD and air bleed line.

5. PARTS LISTS

5.1 PARTS LISTS

Figures 5-1 through 5-8 display components of the ES5500X Generator; corresponding tables outline find numbers, quantity, part number, component description, and Commercial and Government Entity (CAGE) code. The manufacturer of the generator is Pramac; the manufacturer of the engine is Yanmar. Each subcomponent is identified by manufacturer in the figure title. Figure 5-9 provides an AC wiring schematic of the system.

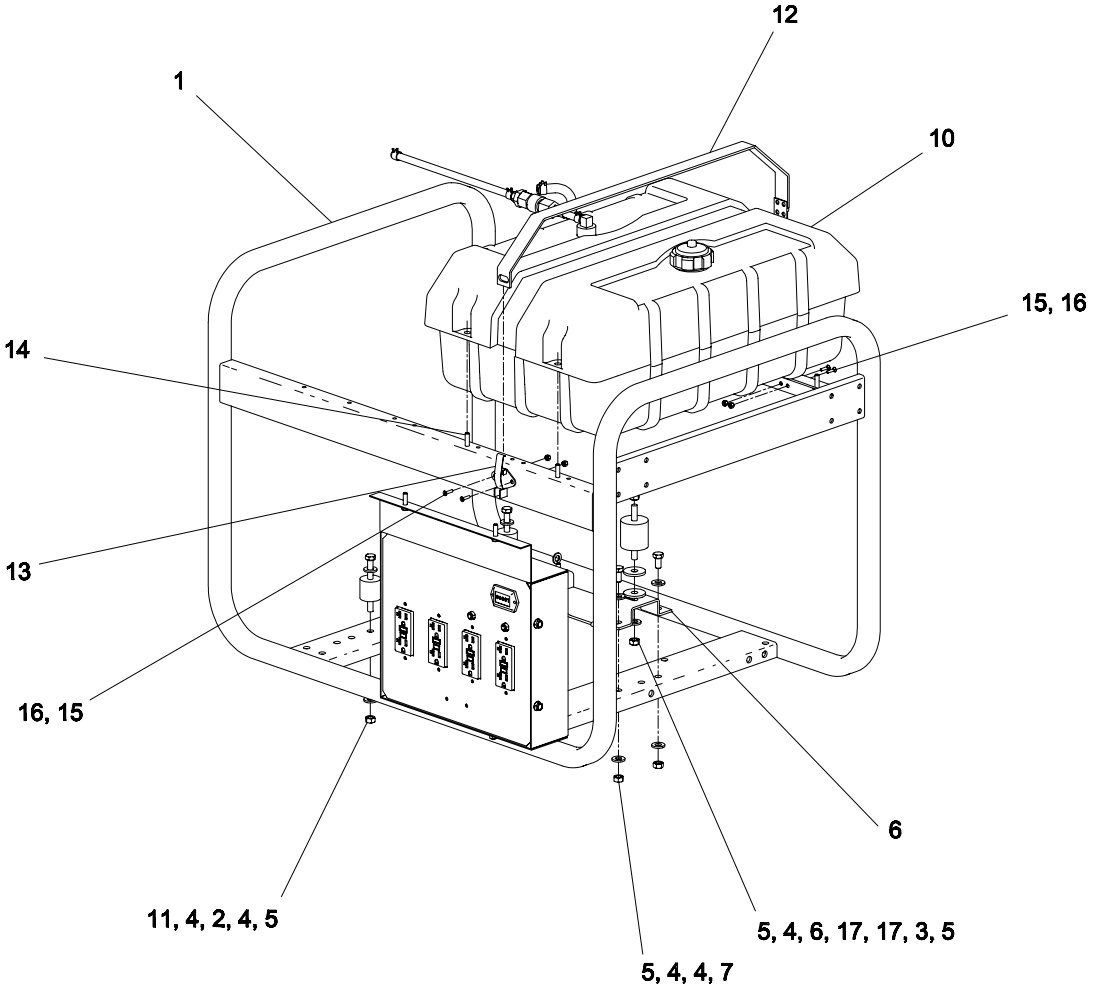

ITEM	QTY.	PART NO.	DESCRIPTION	CAGE
1	1	FRA0007-1	Frame Assembly, Low Profile	1ZKG1
2	2	VIB0010	Vibration Isolator	1ZKG1
3	1	VIB0011	Vibration Isolator	1ZKG1
4	9	WASM080001	Flat washer, M8	1ZKG1
5	6	NUTM080001	Nut, M8 – Nylon Insert	1ZKG1
6	1	BRA0044-1	Alternator Bracket	1ZKG1
7	2	SCRM080002	Bolt, M8 X 16	1ZKG1
8	1	Ground Assembly	Ground Wire Assembly	1ZKG1
9	1	Panel Assembly	Control Panel Assembly	1ZKG1
10	1	Fuel Assembly	Fuel Tank Assembly	1ZKG1
11	2	SCRM080001	Bolt, M8x1.25x30 (8.8)Z	1ZKG1
12	1	BRA0054-1	Tank Strap Assembly	1ZKG1
13	1	LAT0001	Draw Latch	1ZKG1
14	4	SCRM060003	Flange Bolt, M6x20 Z, Thread Form	1ZKG1
15	4	SCR0060001	Screw, #6-32 X ½”	1ZKG1
16	4	NUT0190001	Nut, #6-32 – Nylon Insert	1ZKG1
17	2	SPA0001	Spacer, .375 x 1.25 x 1.25 Zinc	1ZKG1
N/A	1	EYQ100CBK5Y	Engine, Yanmar L100EE	1ZKG1
N/A	1	DP110445	Generator Set Cover (damage control only)	1J0J6

Figure 5-1. Generator (Pramac)

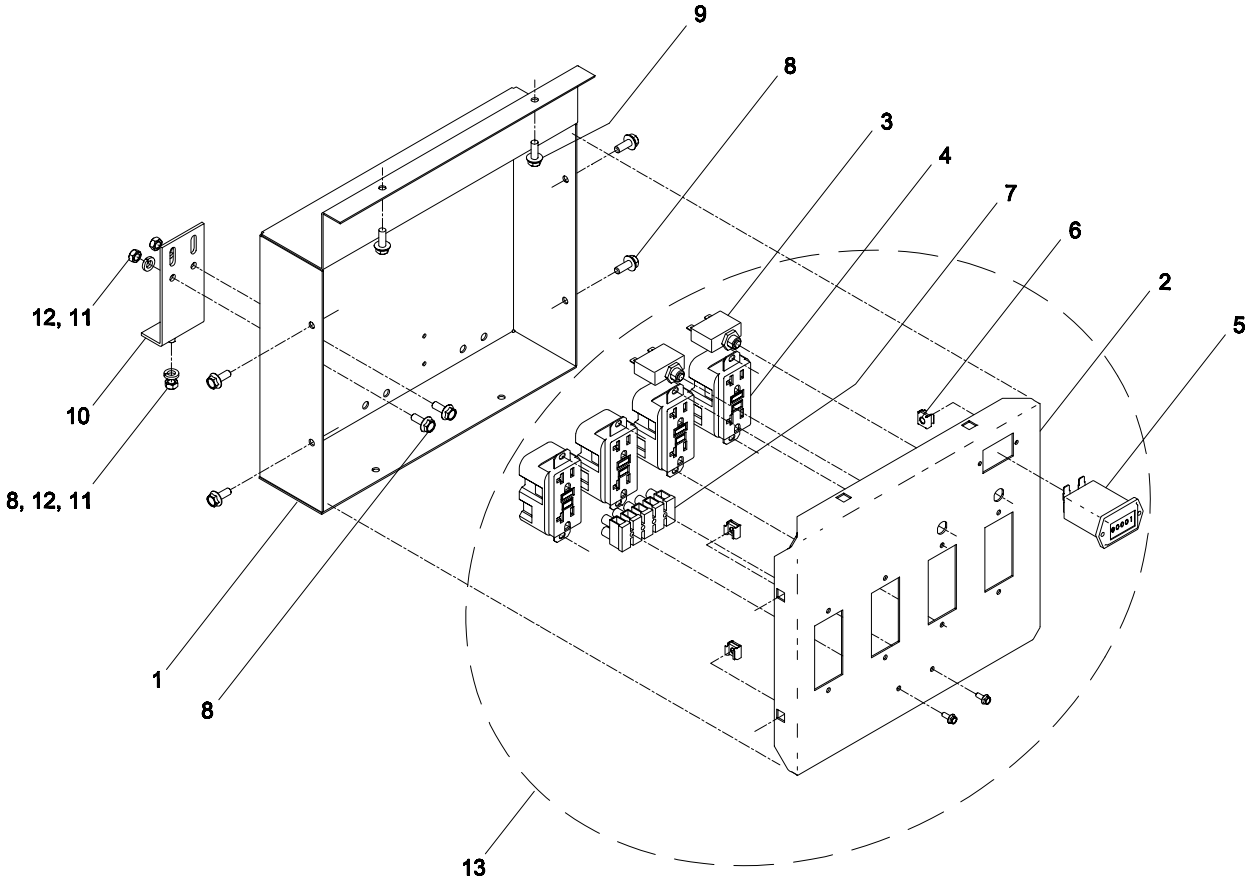

ITEM	QTY.	PART NO.	DESCRIPTION	CAGE
1	1	PAB0001-1	Control Panel Box	1ZKG1
2	1	PAF0018-1	Panel Face, Navy Spec	1ZKG1
3	2	CIR0004	20A Thermal Circuit Breaker	1ZKG1
4	4	REC0002	20A GFCI (NEMA 5-20R)	1ZKG1
5	1	HMT0001	Hour meter	1ZKG1
6	4	NUTM060001	M6 Cage Nut	1ZKG1
7	1	TER0001	Terminal Strip	1ZKG1
8	7	SCRM060001	Flange Bolt, M6x16 Z	1ZKG1
9	2	SCRM060003	Flange Bolt, M6x20 Z, Thread Form	1ZKG1
10	1	BRA0003-1	Panel Box Brace	1ZKG1
11	3	NUTM060002	Nut, M6	1ZKG1
12	3	WAS0250002	M6 Lockwasher	1ZKG1
13	1	PAE0038	Control Panel Assembly	1ZKG1

Figure 5-2. Panel Assembly (Pramac)

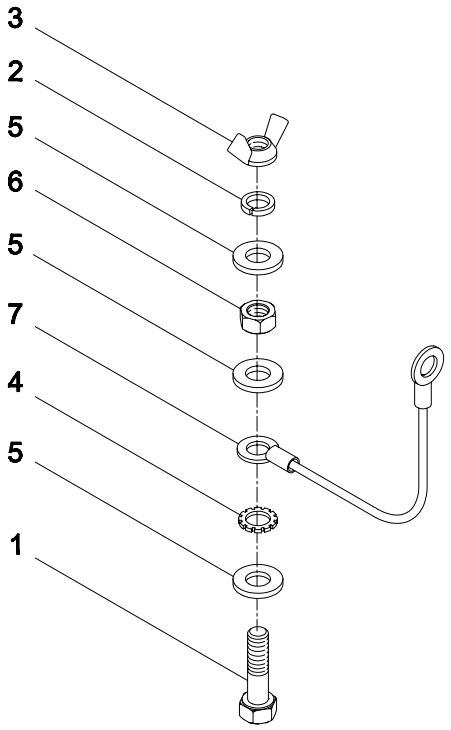

ITEM	QTY.	PART NO.	DESCRIPTION	CAGE
1	1	SCR0310001	Bolt, 5/16”x18x1, Grade 5	1ZKG1
2	1	WASM080002	M8 Lock washer	1ZKG1
3	1	NUT0310001	Wing nut, 5/16”	1ZKG1
4	1	WAS0310001	Star washer, 5/16”	1ZKG1
5	3	WASM080001	Flat washer, M8	1ZKG1
6	1	NUT0310002	Nut, 5/16-18 Grade 5	1ZKG1
7	1	WIR0001	Wire, Ground	1ZKG1

Figure 5-3. Ground Assembly (Pramac)

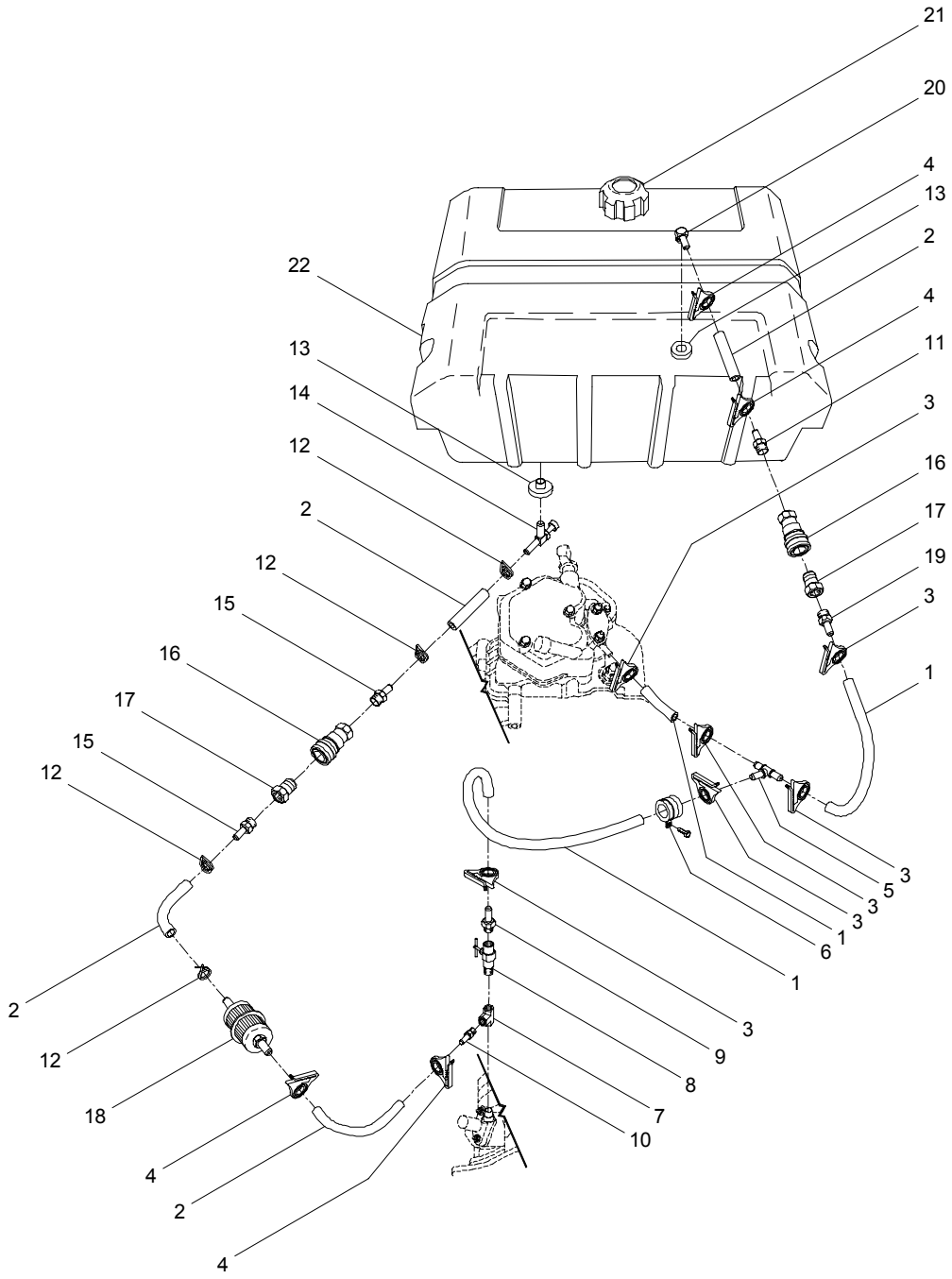

Figure 5-4. Fuel Tank Assembly (Pramac) (Sheet 1 of 2)

ITEM	QTY.	PART NO.	DESCRIPTION	CAGE
1	17”/sys	5645K21	Fuel Hose, (3/16”ID x 7/16”OD)	2V507
2	3”/sys	5645K22	Fuel Hose, (1/4”ID x 7/16”OD)	2V507
3	6	5645K35	Hose Clamp, Nylon	2V507
4	4	5645K48	Hose Clamp, Nylon	2V507
5	1	53055K178	Tee, 3/16”, Kynar	2V507
6	1	3225T23	Clamp, Stainless Steel	2V507
7	1	1203-P2	Union Tee (Female, 1/8” NTP)	0TWK1
8	1	NV108P-2	Needle Valve, Brass (1/8”NTP male, 1/8” NTP female)	0TWK1
9	1	125HB-3-2	Hose Barb (3/16” hose barb x 1/8” NTP)	0TWK1
10	1	125HBL-4-2	Hose Barb (1/4” hose barb x 1/8” NTP)	0TWK1
11	1	125HBL-4-4	Hose Barb (1/4” hose barb x ¼” NTP)	0TWK1
12	6	CLA0002	Hose Clamp, Spring ¼”, DW-8ST ZD	1ZKG1
13	2	GRM0002	Grommet, Fuel Valve	1ZKG1
14	1	VAL0002	Fuel Valve	1ZKG1
15	2	CPL0007	Quick Couple (1/4 Hose X ¼ NPT)	1ZKG1
16	2	CPL0005	Quick Couple – Female	1ZKG1
17	2	CPL0006	Quick Couple – Male	1ZKG1
18	1	W3-1/2	Fuel Filter	3P8W0
19	2	CPL0008	Hose Barb (3/16 Hose X ¼ NPT)	1ZKG1
20	1	ELB0003	90 Degree Elbow	1ZKG1
21	1	CAP0004	Fuel Cap, Vented	1ZKG1
22	1	TAN0005	Fuel Tank, 8 Gallon	1ZKG1

Figure 5-4. Fuel Tank Assembly (Pramac) (Sheet 2 of 2)

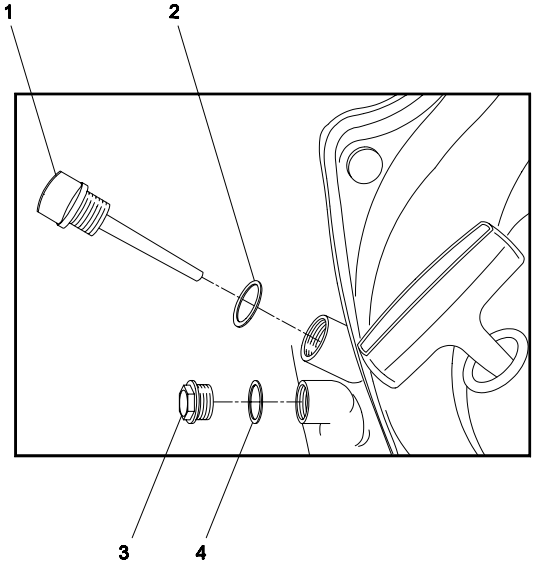

ITEM	QTY.	PART NO.	DESCRIPTION	CAGE
1	2	160910-01740	Filler Cap with Dipstick	0AK42
2	2	24311-000180	O-ring	0AK42
3	2	105425-01690	Oil Drain Plug	0AK42
4	2	22190-160002	Seal Washer	0AK42

Figure 5-5. Lube Oil Cap and Plug (Yanmar)

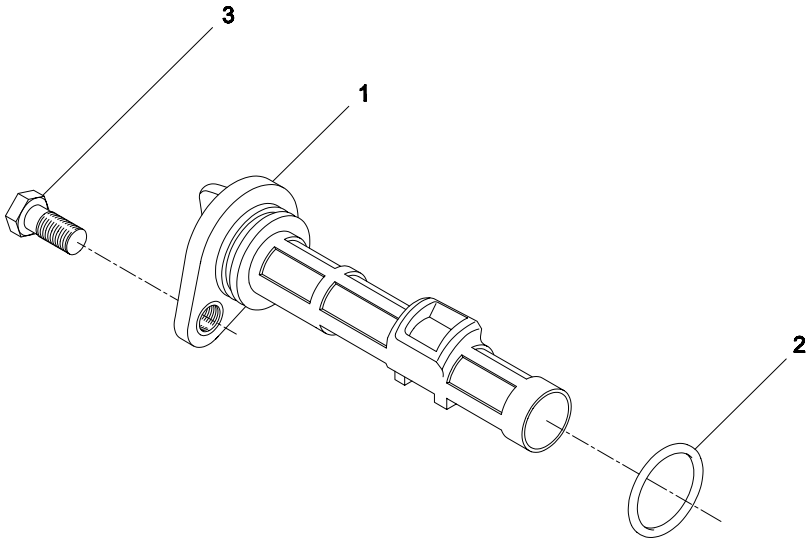

ITEM	QTY.	PART NO.	DESCRIPTION	CAGE
1	2	114250-35110	Strainer, Lube Oil	0AK42
2	2	24341-000224	O-ring (part of strainer kit)	0AK42
3	2	26106-060162	Lock Bolt	0AK42

Figure 5-6. Lube Oil Strainer (Yanmar)

ITEM	QTY.	PART NO.	DESCRIPTION	CAGE
1	1	160725-78350	Thumbscrew	0AK42

Figure 5-7. Engine Speed Lever Thumbscrew (Yanmar)

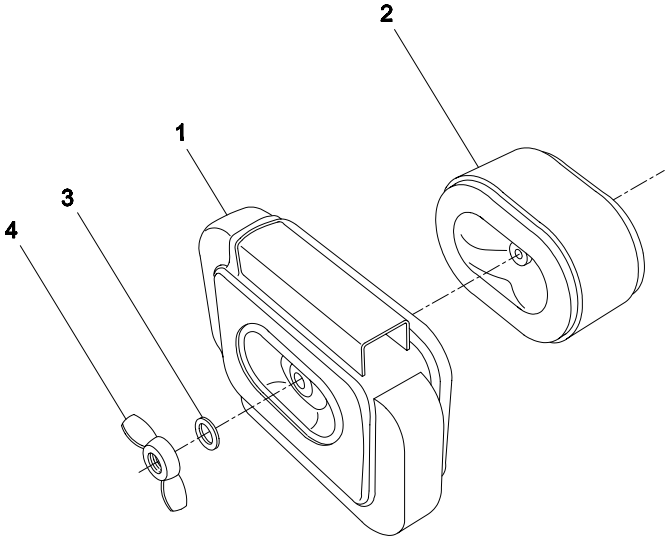

ITEM	QTY.	PART NO.	DESCRIPTION	CAGE
1	1	114650-12520	Air Cleaner Cover	0AK42
2	1	114650-12590	Air Cleaner Element	0AK42
3	1	114252-12560	Seal Washer	0AK42
4	1	114252-12550	Wing Nut	0AK42

Figure 5-8. Engine Air Cleaner (Yanmar)

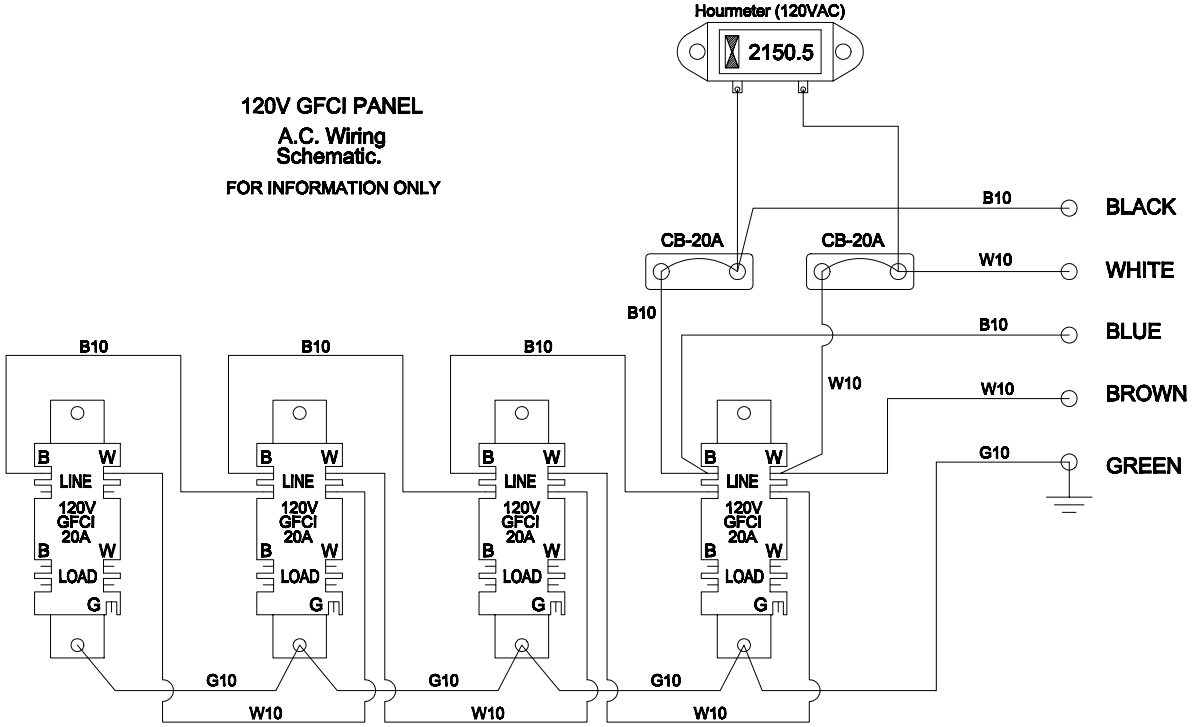

Figure 5-9. AC Wiring Schematic

NAVSEA/SPAWAR TECHNICAL MANUAL DEFICIENCY/EVALUATION REPORT (TMDER)

INSTRUCTION: Continue on 8 - 1/2" x 11" paper if additional space is needed.

1. USE THIS REPORT TO INDICATE DEFICIENCIES, PROBLEMS, AND RECOMMENDATIONS RELATING TO PUBLICATION.
2. FOR CLASSIFIED TMDERS, SEE OPNAVINST 5510H FOR MAILING CLASSIFIED TMDERS.
3. Submit TMDERS at web site http://nsdsa.phdnswc.navy.mil/ or mail.

1. PUB NO.	2. VOL/PART	3. REV. NO./DATE OR TM CH. NO./DATE	4. SYSTEM/EQUIPMENT IDENTIFICATION

5. TITLE	6. REPORT CONTROL NUMBER (UIC-YEAR-XXXX)
Technical Manual, Operation and Maintenance Instructions, Organizational Level, for the PRAMAC ES5500X 5.5KW Generator Set	

7. RECOMMENDED CHANGES TO PUBLICATION

PAGE NO. A.	PARA-GRAPH B.	C. RECOMMENDED CHANGES AND REASONS		

8. NAME AND WORK CENTER (Originator--Please Print)	9. DATE	10. DSN/COMM NO.	11. TRANSMITTED TO (NSDA Will Complete)

12. SHIP HULL NO. AND/OR STATION ADDRESS (Do Not Abbreviate)	13. EMAIL ADDRESS (Originator)

FOLD HERE

DEPARTMENT OF THE NAVY

Official Business

PLACE
POSTAGE
HERE

COMMANDER
NSDSA CODE 5E30
NAVSURFWARCENDIV
4363 MISSILE WAY
PORT HUENEME, CA 93043-4307

FOLD HERE