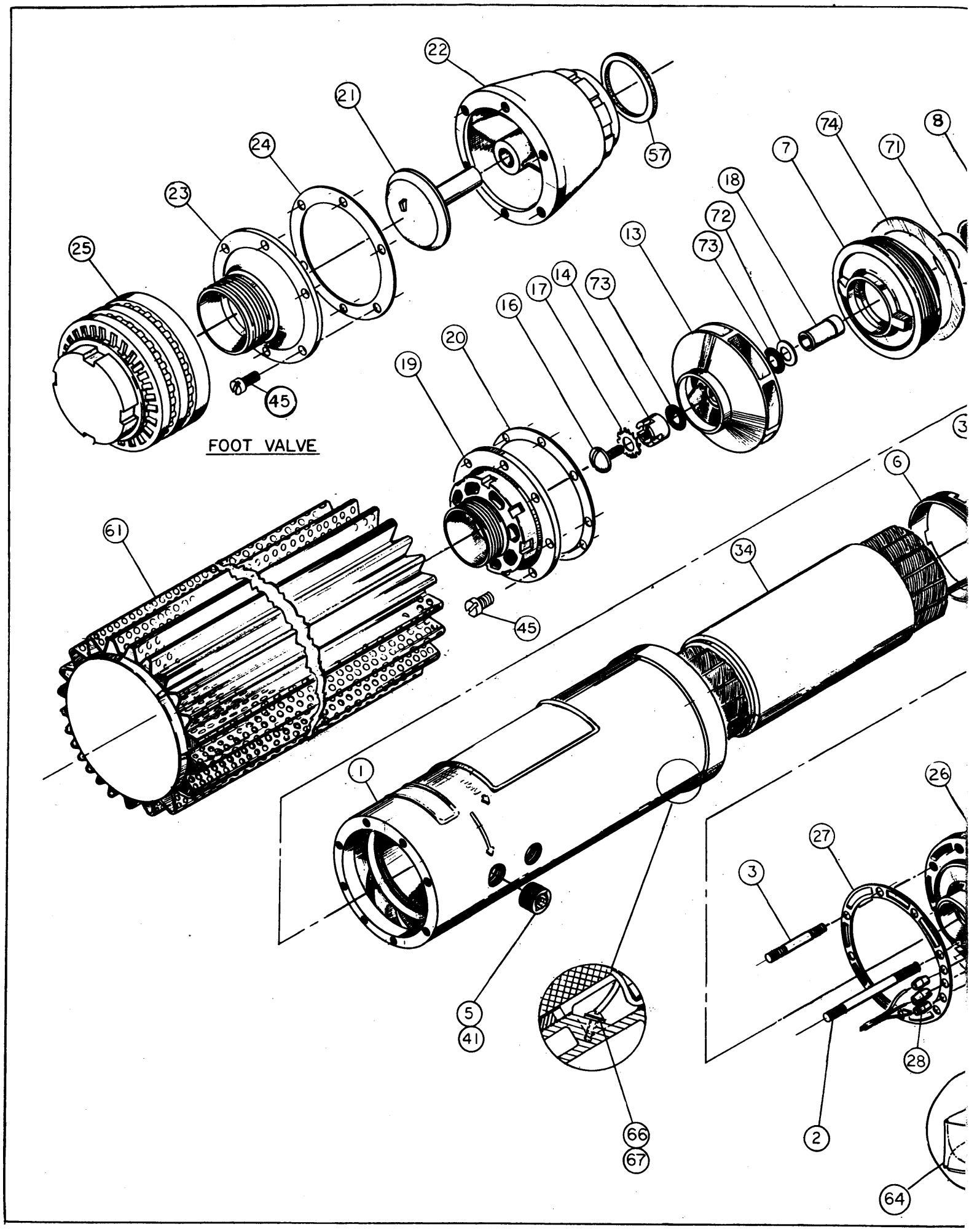
22
21
24
23
25
57
74
8
7
71
18
72
73
13
14
73
17
16
20
19
45
FOOT VALVE
3
6
61
34
45
1
26
27
3
5
41
28
66
67
2
64

INTERPRET DRAWING IN ACCORDANCE WITH STANDARDS PRESCRIBED BY MIL-STD-100

REVISIONS

SYM	ZONE	DESCRIPTION	DATE	APPR
A		SEE E.O.	7-27-84	

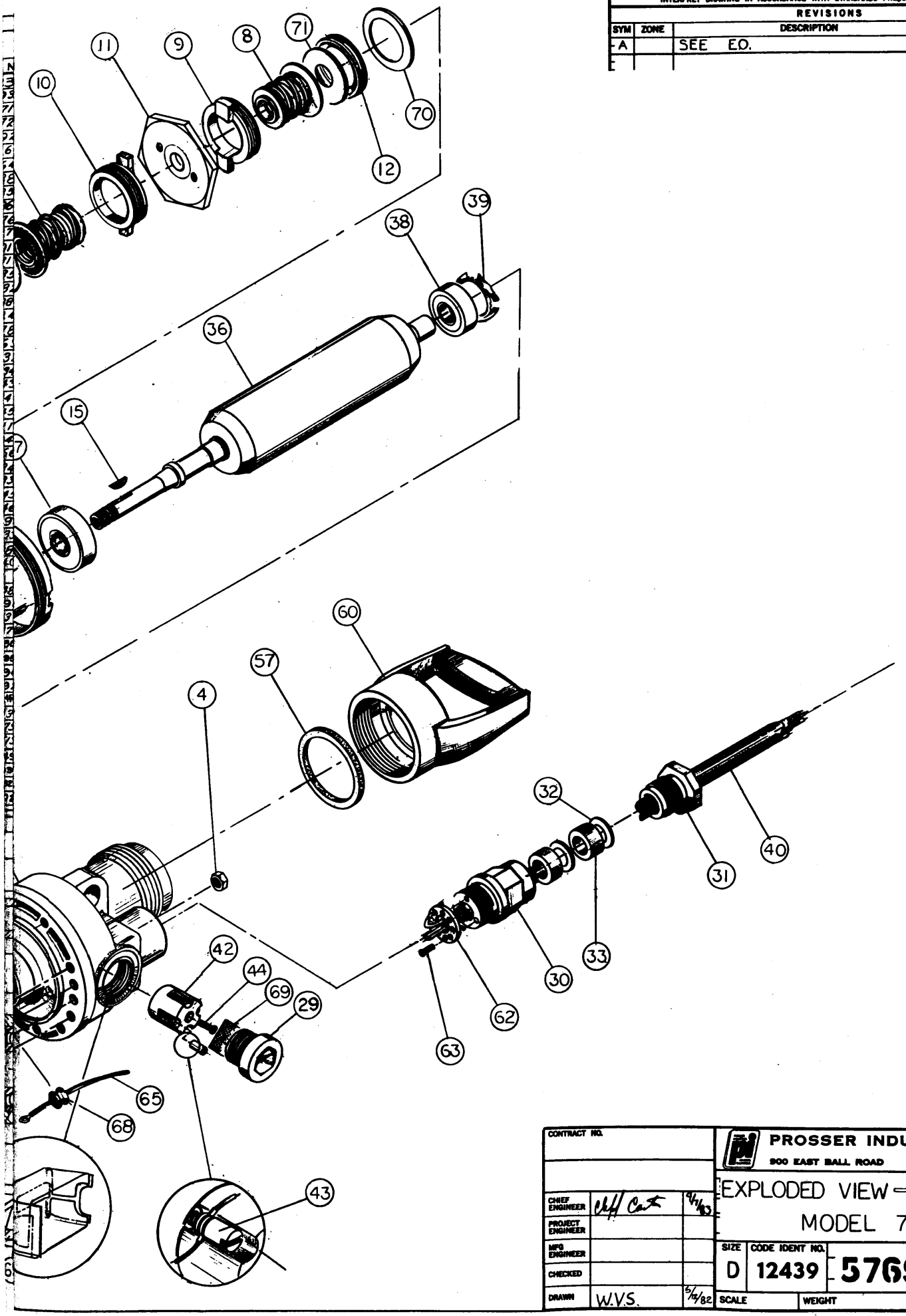

CONTRACT NO.		
CHIEF ENGINEER	Chief Cat	9/1/83
PROJECT ENGINEER		
MFG ENGINEER		
CHECKED		
DRAWN	W.V.S.	5/12/82

PROSSER INDUSTRIES
900 EAST BALL ROAD ANAHEIM, CALIF. 9

EXPLODED VIEW - PUMP ASS
MODEL 777D (BRONZ

SIZE	CODE IDENT NO.	
D	12439	576933

SCALE | WEIGHT | SHEET 1 OF

INTERPRET DRAWING IN ACCORDANCE WITH STANDARDS PRESCRIBED BY MIL-STD-100

REVISIONS

SYM	ZONE	DESCRIPTION	DATE	APPROVED
A		SEE E.O.	6-5-84	S.M.
B		SEE E.O.	7-31-84	S.M.

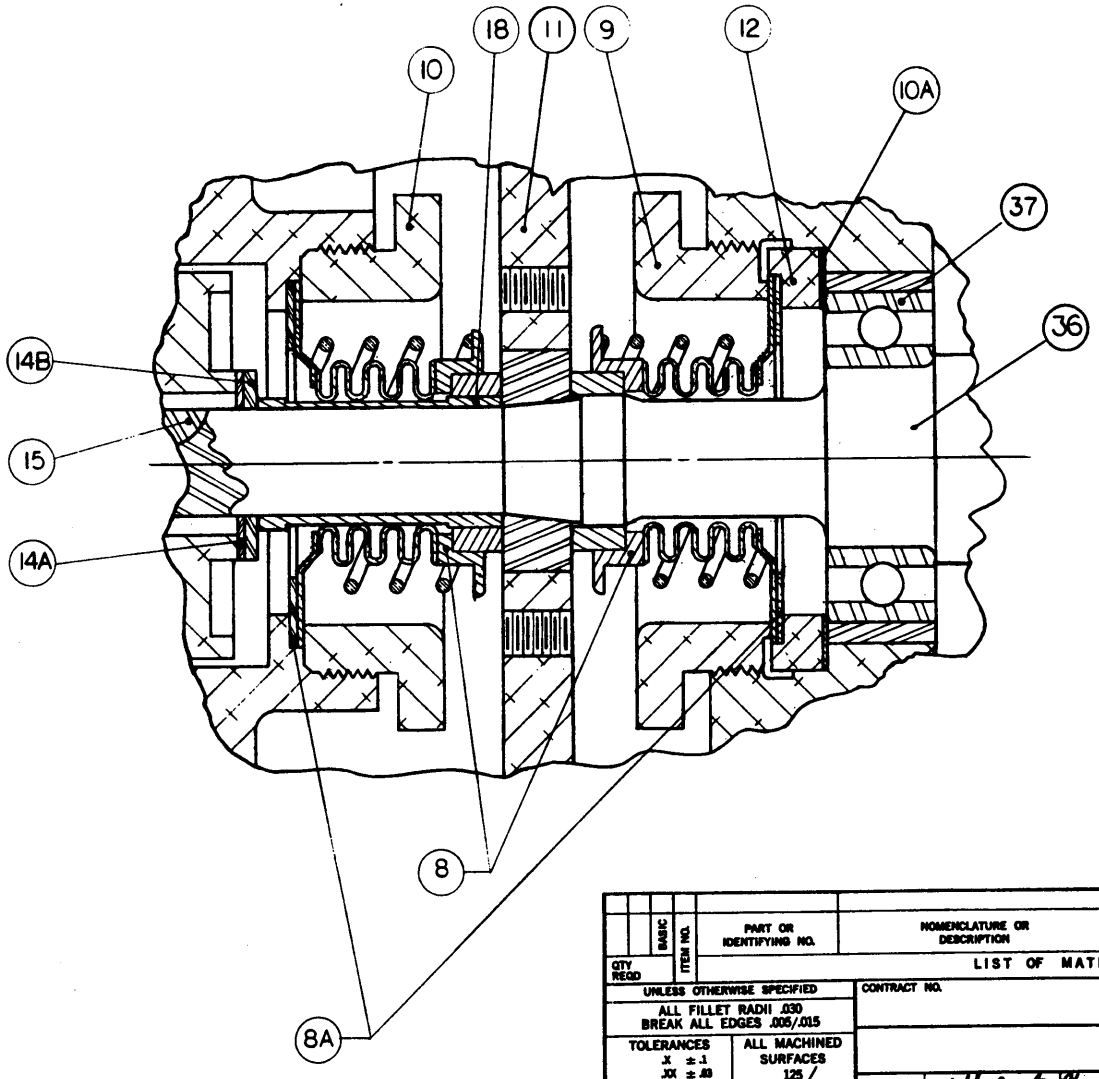

576931 B

QTY REQD	BASIC	ITEM NO.	PART OR IDENTIFYING NO.	NOMENCLATURE OR DESCRIPTION	CODE IDENT	MATERIAL	SPECIFICATION

LIST OF MATERIAL OR PARTS LIST

UNLESS OTHERWISE SPECIFIED
ALL FILLET RADII .030
BREAK ALL EDGES .005/.015
TOLERANCES
.X ± .1
.XX ± .03
.XXX ± .010
ANGULARITY ± 0°30'
ALL MACHINED SURFACES 125

HEAT TREAT

PROTECTIVE FINISH

CONTRACT NO.

CHIEF ENGINEER Cliff Cates 9/1/83
PROJECT ENGINEER
MFG ENGINEER
CHECKED
DRAWN S. MENDEZ 9/1/83

PROSSER INDUSTRIES INC.
900 EAST BALL ROAD ANAHEIM, CALIF. 92803

CROSS-SECTION VIEW, NAVY
PUMP SEAL AREA
777H, 822H & 822A

SIZE C | CODE IDENT NO. 12439 | 576931 | REV B

SCALE 2:1 | WEIGHT | SHEET 1 OF 1

BASIC				
DASH NO.	NEXT ASSY	FINAL ASSY	NEXT ASSY	FINAL ASSY
APPLICATION			QTY REQD	

Page 19 Figure 5

INTERPRET DRAWING IN ACCORDANCE WITH STANDARDS PRESCRIBED BY MIL-STD-100

REVISIONS

SYM	ZONE	DESCRIPTION	DATE	APPROVED
A		SEE E.O.	7-31-84	S.M.

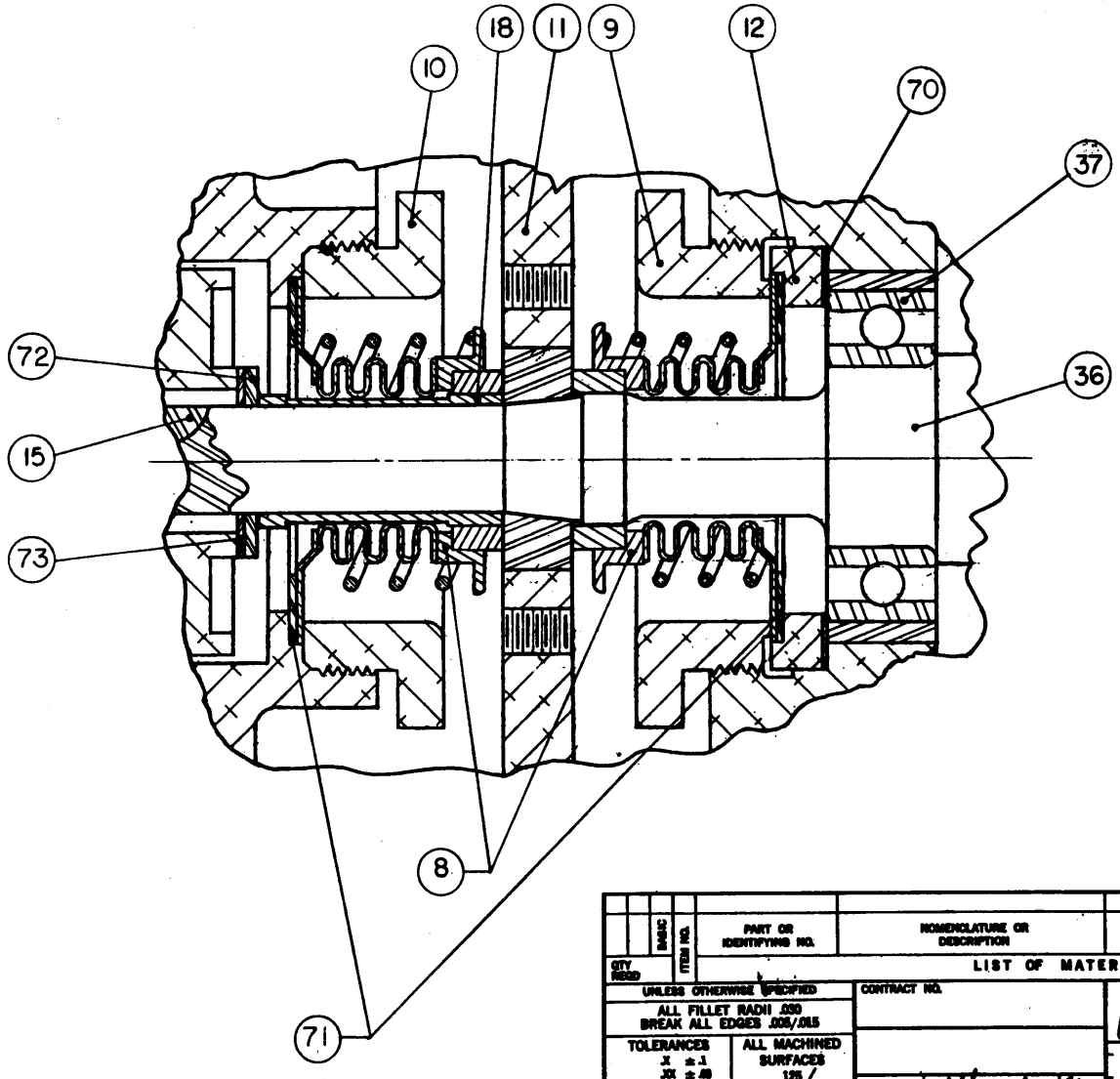

576932 | A

QTY REQD	BASIC	ITEM NO.	PART OR IDENTIFYING NO.	NOMENCLATURE OR DESCRIPTION	CODE IDENT	MATERIAL	SPECIFICATION

LIST OF MATERIAL OR PARTS LIST

UNLESS OTHERWISE SPECIFIED
ALL FILLET RADII .030
BREAK ALL EDGES .005/.015
TOLERANCES
X ±.1
XX ±.03
XXX ±.005
ANGULARITY ±0°30'
ALL MACHINED SURFACES 125

HEAT TREAT

PROTECTIVE FINISH

CONTRACT NO.

CHIEF ENGINEER	Chief Carter	8/1/83
PROJECT ENGINEER		
MFG ENGINEER		
CHECKED	C. J. CARTER	8/1/83
DRAWN	S. MENDEZ	8/1/83

PROSSER INDUSTRIES
900 EAST BALL ROAD ANAHEIM, CALIF. 92805

CROSS-SECTION VIEW, NAVY PUMP SEAL AREA 777D (BRONZE)

SIZE	CODE IDENT NO.		REV
C	12439	576932	A

SCALE 2:1 WEIGHT SHEET 1 OF 1

BASIC				
DASH NO.	NEXT ASSY	FINAL ASSY	NEXT ASSY	FINAL ASSY
APPLICATION			QTY REQD	

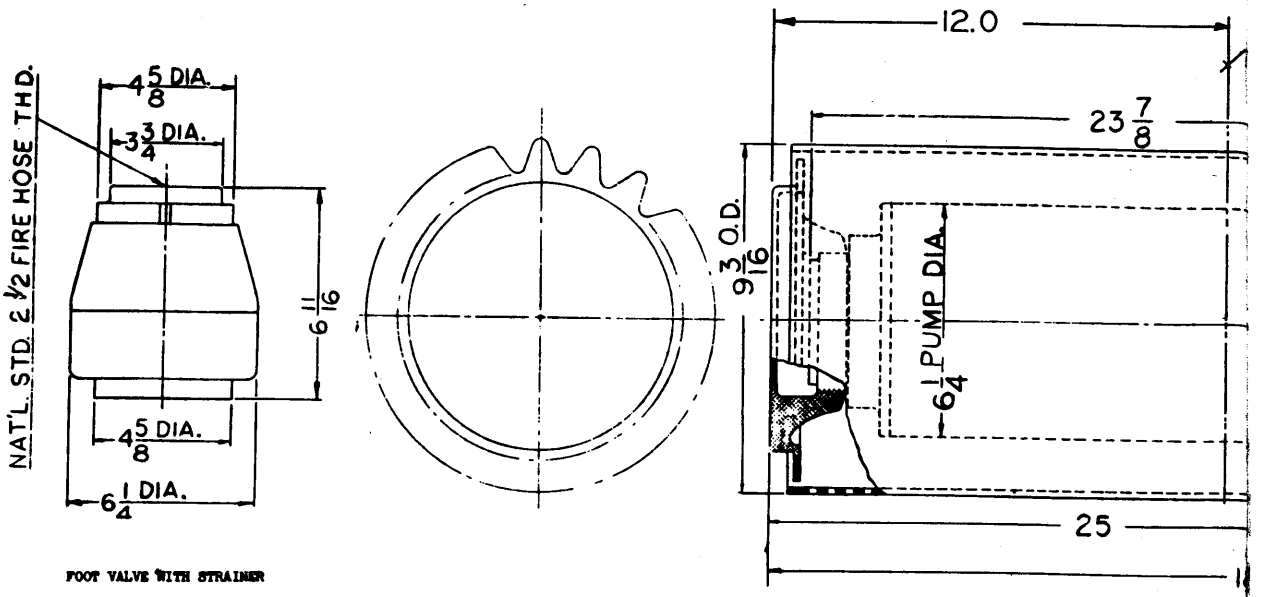

FOOT VALVE WITH STRAINER

REPAIR PARTS LIST FOR ONE PUMP

ITEM	NAME	REQ'D.	SERVICE PART NO.	NAVSEA DWG. NO.	NATIONAL STOCK NO.
2	FRAME STUD - LONG	1	1493AB	3,175,606	9Z5307-00-206-3187
3	FRAME STUD - SHORT	1	1471AB	3,175,596	9Z5307-00-206-3177
4	FRAME STUD NUT	6	A1562[illegible]		
4A	WASHER - STUD NUT	16	558378-1	3,175,607	1HS0000-LL-CGI-7382
5	FRAME PIPE PLUG	2	1592AB	3,175,604	9C4730-00-293-7274
7	OIL COVER	1	4264AB	3,175,607	9C4320-00-308-6888
7A	GASKET (OIL COVER)	2	558383-2	3,175,607	9Z5330-00-222-2562
8	SEAL	4	1388D	3,175,606	9C4320-00-302-1960
8A	SEAL GASKET (OIL COVER)	2	558377-1	3,175,607	9Z5330-00-292-2456
10A	BEARING RETAINER GASKET	1	615701		
10B					
11	SPLASHER ASSEMBLY	2	1476AB	3,175,608	9C4320-00-308-6884
13	RUNNER ASSEMBLY	1	25673AD	3,175,596	9C4320-00-035-7378
14	RUNNER RETAINER	1	1331AB	3,175,606	9Z5310-00-638-1142
14A	RETAINER WASHER	2	558239-1	3,175,606	
14B	RUNNER WASHER	1	558323-1	3,175,604	
15	KEY	1	1335AB		9Z5315-00-286-2333
16	LOCKING SCREW	1	1332AB	3,175,606	9Z4320-00-316-2954
17	LOCKWASHER	1	A1438		9Z5310-00-948-9708
18	SHAFT SLEEVE	1	1334	3,175,606	9Z3120-00-097-1155
20	COVER GASKET	2	1469-1	3,175,604	9Z5330-00-298-0710
24	VALVE GASKET	1	1344-1	3,175,605	9Z5330-00-256-8157
27	COVER GASKET	2	1494-2	3,175,606	9Z5330-00-300-5919
28	TERMINAL BUSHING	6	1466-1	3,175,607	9Z5365-00-598-5322
29	CONNECTION BOX COVER	1	1484AB	3,175,606	9Z4730-00-289-1820
33	PACKING RING	4	1495-1	3,175,606	9Z5365-00-598-5365
	440 VOLT		58338	3,175,593	9Z6105-00-500-4937
34	STATOR - 220 VOLT	1	15388B	3,175,593	9C6105-00-500-0327
	115 VOLT		45408	3,175,593	1HLLCF-80963
35	ROTOR SHAFT ASSEMBLY	1	15389	3,175,596	9C4320-00-035-8922
37	LOWER BEARING	1	A1491		9Z3110-00-156-3548
38	UPPER BEARING	1	A1313		9Z3110-00-156-3508
39	BEARING SPRING	1	A1279		9Z5310-00-141-9705
43	TERMINAL NUT	1	1492	3,175,606	9Z5310-00-934-9764
45	STUDS	1	558303-1	3,175,607	9Z5307-00-206-3171
45A	SCREW	1	A1439		
	GREASE PER MIL-G-23549	1/2 PT.	550034-1	9G	9150-00-985-7316
67	GROMMET	1	2-31024-1		

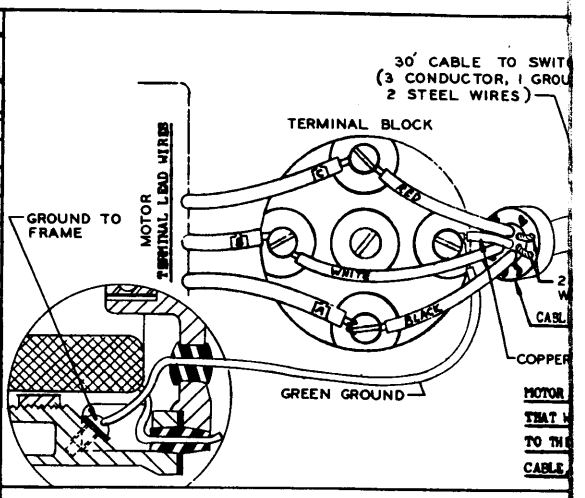

REPAIR PARTS LIST FOR SWITCH

NAME	REQ.	SERVICE PART NO.	NAVSEA DWG. NO
GASKET	2	83642AA	9000-86-736
440 VOLT 15 AMP		A4054AA15	9000-86-736
FUSETRON 220 VOLT 20 AMP	21	A4053AA20	9000-86-736
115 VOLT 30 AMP		A4053AA30	9000-86-736
PACKING	1	33250AB	
ROTARY SWITCH ASSEMBLY	1	83661AB	9000-86-730
SCREW	2	A11420PHT7	
LOCKWASHER	2	A1441AC	9000-86-736
O RING SEAL	1	MS 28775-010	
PACKING	1	33251AB	
FUSE CLIP 30 AMP	3	A1317AB	9-S-429
FUSE CLIP NUT	3	33283AB	9-S-429
TERMINAL ASSEMBLY	3	83655AA	9000-86-730
GROUND LEAD TERMINAL	2	A2926AA3	9-S-184
TERMINAL SCREW ASSEMBLY	3	83651AA	9000-86-730
STUFFING ASSY (4T)	2	33249AB	

REFERENCE:

DETAIL OF TOOLS-USE MFR. DWG. NO. 576

LIST OF TOOLS

ITEM	NAME	REQ.	SERVICE PART NO.	NA DW
1	SYLPHON SEAL RETAINER WRENCH	1	1487AB	3,2
2	MOTOR RETAINER WRENCH	1	15701AB	3,2
3	SHAFT HOLDING FIXTURE	1	15702AB	3,2
4	RUNNER & SPLASHER PULLER	1	15703AB	3,2
5	WRENCH	1	5686AB	3,2
6	RUNNER RETAINER & LOCK.SCR. WRENCH	1	23600AB	3,2

CONTROL SWITCH IN ACCORDANCE WITH STANDARD DRAWING NO. 415-1137097 EXCEPT THAT THE ENCLOSURE IS OF A.I.S.I. 302 STAINLESS STEEL FOR IDENTIFICATION SWITCH NAME PLATE IS STAMPED

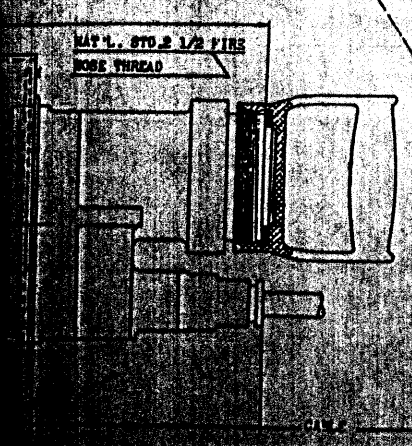

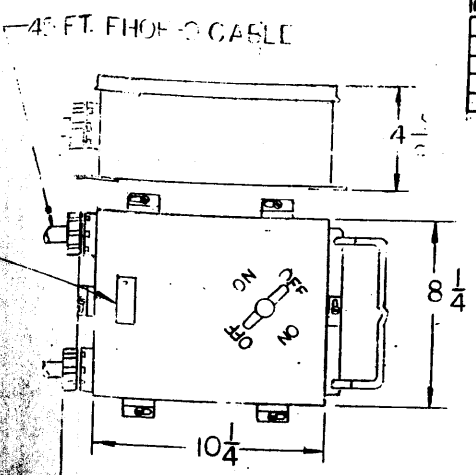

REVISIONS					
REV.	DESCRIPTION	MFR. DATE	MFR. APPD	U.S.E. DATE	U.S.E. APPD
B	[illegible]				
C	[illegible]				
	RECORD CHANGE				
D	SEE E.O.	[illegible]	R.F.		
E	SEE E.O.	[illegible]	S.M.		
F		[illegible]	[illegible]		

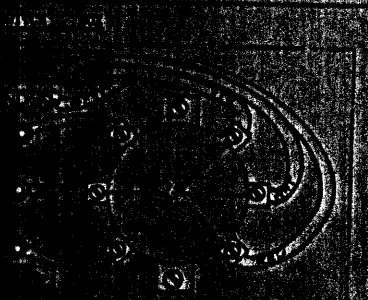

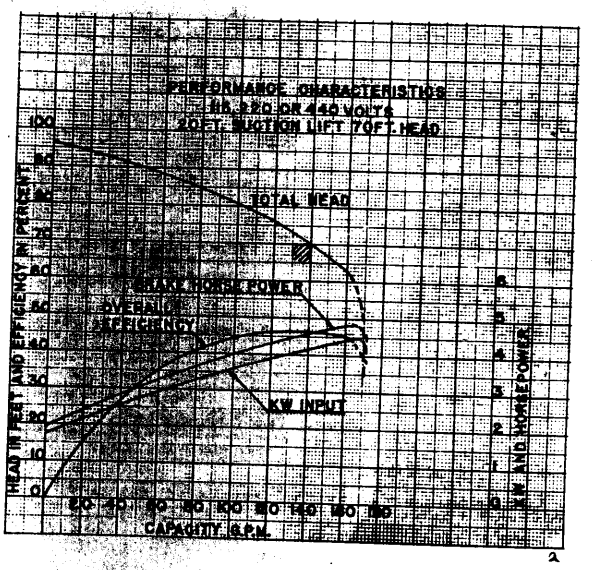

HYDRAULIC CHARACTERISTICS:

200 GPM AT 50 FEET TOTAL HEAD
140 GPM AT 70 FEET TOTAL HEAD
SHUT-OFF HEAD NOT LESS THAN 90 FEET

VOLTS	NATIONAL STOCK NO.
115	H4320-00-273-0874
220	H4320-00-752-9647
440	H4320-00-368-3186

WEIGHTS:

PUMP AND STAR STRAINER LESS CABLE	67 LBS.
FOOT VALVE ASSEMBLY	9 3/4 LBS.
SMALL STRAINER	4 LBS.
CABLE 30 FEET	7 1/2 LBS.
CABLE 45 FEET	12 1/2 LBS.
SWITCH	10 1/2 LBS.
REPAIR PARTS & TOOLS (BOXED)	80 LBS.

REFERENCE:
FOR DETAIL OF TOOLS USE
NAVSEA NO. F-3,217,662

FOR SECTIONAL ASSEMBLY USE
MFG. DRAWING NO. 576905
NAVSEA NO. S4700-F-3,175,592

OILING INSTRUCTIONS
DRAIN INTERMEDIATE CHAMBER AFTER 400-500 HOURS OR ONE YEAR OF SERVICE AND REFILL WITH 9 OZ. OF OIL, NAVY SYMBOL 2135TH

PUMPS ON OUTLINE DRAWING S4700-F-3,175,594 ARE IDENTICAL TO THOSE ON OUTLINE DRAWING S4700-F-3,175,595, EXCEPT THAT THOSE ON S4700-F-3,175,594 HAVE NON-MAGNETIC SWITCH ENCLOSURES, NON-MAGNETIC TOOLS AND NON-MAGNETIC REPAIR PARTS BOX.

OUTLINE DRAWING
OUTLINE CHARACTERISTIC AND REPAIR PARTS LIST FOR A.C. PORTABLE SUBMERSIBLE PUMP
MODEL 777H
(ALUM)

PROSSER INDUSTRIES INC
ANAHEIM, CALIFORNIA
DWG. NO. 576907

NAVSEA		NO.	REV.
S4700	F	3,175,594	

SCALE ____ WT. CALC. ACTUAL
CONT ON SHT. ____ SHT. NO. ____

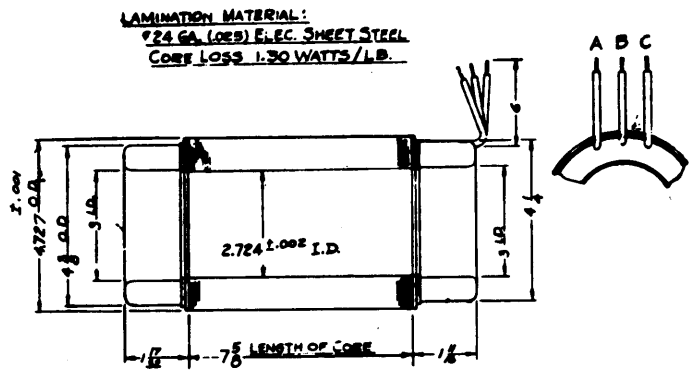

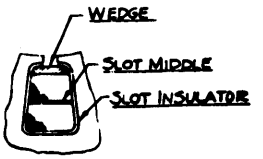

ENLARGED SECTION THROUGH STATOR SLOT

STATOR
ITEM NO. 34

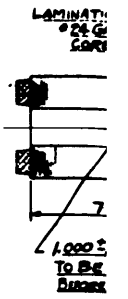

STATOR WINDING DATA			
SERVICE PART NO.	56338	15386B	45408
NATIONAL STOCK NO.	926105-00-500-4937	9G6105-00-500-0327	IHLLCF-80963
VOLTAGE	440	220	115
NUMBER OF POLES	2	2	2
TYPE OF CONNECTION	SERIES Y	PARALLEL Y	PARALLEL Y
NUMBER OF SLOTS	24	24	24
NUMBER OF COILS	24	24	24
GROUPING OF COILS	4 COILS PER GROUP	4 COILS PER GROUP	4 COILS PER GROUP
WINDING PITCH IN SLOTS	1 - 11	1 - 11	1 - 11
TURNS IN SERIES PER COIL	18	18	10
CONDUCTOR	2 - #21	2 - #21	4 - #21
CONDUCTOR INSULATION	HEAVY FORMEX	HEAVY FORMEX	HEAVY FORMEX
RESIS. BETWEEN TERM. @ 25° C	4.2 OHMS	1.18 OHMS	.30 OHMS
WEIGHT OF COPPER - POUNDS	4.8 LBS	4.8 LBS	5.3 LBS

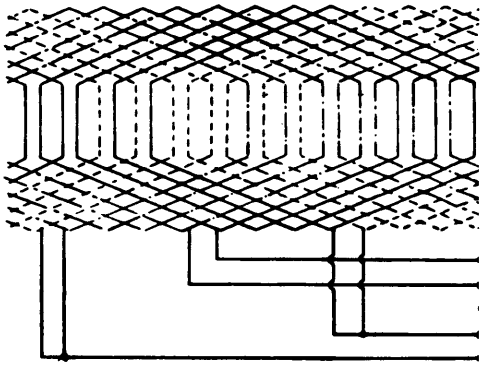

STATOR INSULATION MATERIAL		
INSULATION CLASS A AND B		
APPLICATION	MATERIAL	SPECIFICATIONS
SLOT INSULATOR	.015" BONDED FISH PAPER & MICA	MIL-I-695A & NM-I-538
SLOT MIDDLE	.015" EPOXY CTD FIBERGLASS CLOTH	ASTM D-149, H.T. ENDURANCE: CL. H
TOP WEDGE	INMANCO #DMDS 20-15-11 (.020 THK)	
INSULATION BETWEEN PHASES	.015" VARNISHED GLASS CLOTH	MIL-I-17205 GR. 0 CL. 1
INSULATION ON COIL EXTENSION	HIGH TEMP GLASS TAPE	MIL-I-15126F, TYPE GFT-AMEND. 2
INSULATION ON COIL LEADS	VARNISHED GLASS SLEEVE	MIL-I-3190 CL. B C-1
VARNISH		JAN-V-1137, GR. C. B. TYPE M
ASSY BINDER	A2940AA6 GLASS TAPE	

IMPREGNATION & BAKING SPECIFICATIONS

1.0 IMPREGNATION & BAKE

1.1 PREHEAT THE STRATOR FOR 30 MINUTES AT 295°F. HEAT RINGS AND PLUGS.
1.2 WHILE HOT (150-170°F), IMMERSE IN A VERTICAL POSITION IN ISONEL #31 VARNISH. IMMERSE SLOWLY AT A RATE OF APPROXIMATELY 12-18 INCHES PER MINUTE. THE UNITS SHOULD BE IMMERSED FOR FIVE (5) TO FIFTEEN (15) MINUTES (DETERMINED BY THE CESSATION OF RISING BUBBLES).
1.3 REMOVE FROM TANK AND DRAIN FOR THIRTY (30) MINUTES TO ONE (1) HOUR IN A VERTICAL POSITION. DRAINING OF UNITS SHOULD BE DONE IN FREE AIR ABOVE THE TANK OR A DRAINTABLE. INSTALL HOT RINGS AND PLUGS.
1.4 **FIRST BAKE:** BAKE FOR FOUR (4) HOURS AT 295°F IN A VERTICAL POSITION. REMOVE RINGS AND PLUGS WHILE HOT.
1.5 COOL TO 150-170°F.
1.6 REPEAT DIP AND DRAIN STEPS 1.2 AND 1.3, EXCEPT ALLOW FIVE (5) MINUTES IMMERSION TIME.
1.7 **SECOND BAKE:** BAKE FOR FIVE (5) HOURS AT 295°F, IN A VERTICAL POSITION.
1.8 COOL TO 150-170°F.
1.9 REPEAT DIP AND DRAIN STEPS 1.2 AND 1.3, EXCEPT ALLOW FIVE (5) MINUTES IMMERSION TIME.
1.10 **THIRD BAKE:** BAKE FOR SIX (6) HOURS AT 295°F, IN A VERTICAL POSITION.

2.0 FINISHING

2.1 CLEAN LEADS AND END COILS.
2.2 PAINT END COILS WITH INSULATING PAINT, PROSSER PART NO. A2959AA.
2.3 AIR DRY FOR TWO (2) HOURS MINIMUM.

NOTE:

CHECK VARNISH VISCOSITY AT INTERVALS OF ONE (1) WEEK MINIMUM OR BEFORE EACH DIP, IF DIP INTERVALS EXCEED ONE (1) WEEK.

RECOMMENDED THINNER: V M & P NAPTHA #66.

TO MAINTAIN THE PROPER BALANCE BETWEEN VOLATILE AND NON-VOLATILE CONTENT, EACH TIME THAT THINNER IS ADDED, AN EQUAL AMOUNT OF FRESH VARNISH MUST BE ADDED ALSO.

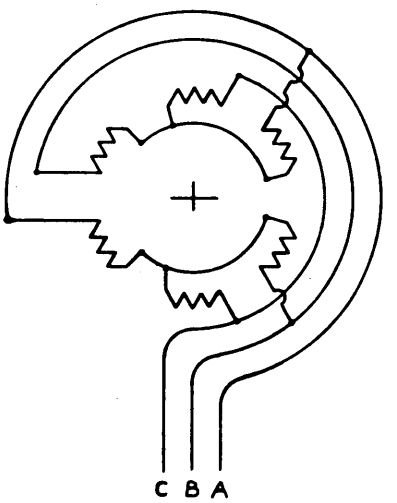

CONNECTION DIAGRAM FOR 220 & 115 VOLT STATORS
CCW ROTATION AS VIEWED FROM LEAD END

REVISIONS					
REV.	DESCRIPTION	MFR. DATE	MFR. APP'D	U.S.E. DATE	U.S.E. APP'D
B	[illegible]				
C	[illegible]				
D	SEE E.O.	[illegible]	R.F.		
E	SEE E.O.	[illegible]	SM		

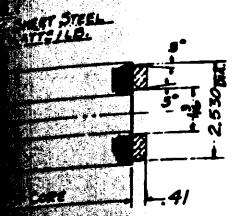

ROTOR
SEE ITEM NO. 35

NOT SERVICED SEPARATELY

	29
[illegible]	(DIE CAST)
[illegible]	(DIE CAST)

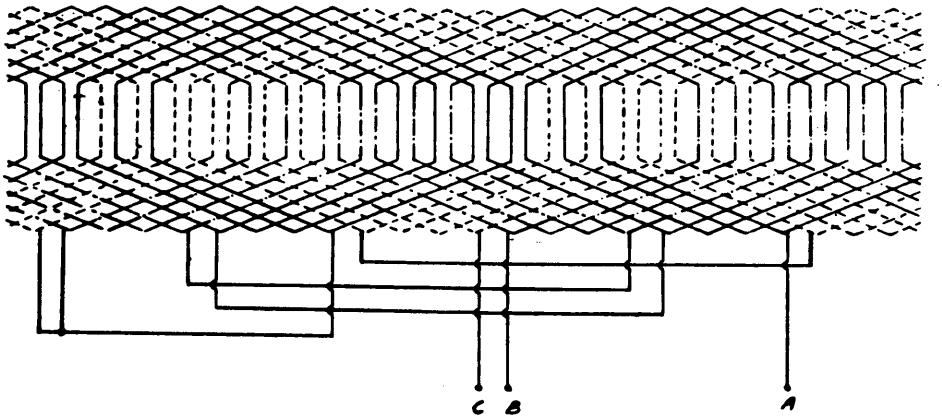

WINDING DIAGRAM 440 VOLT STATOR

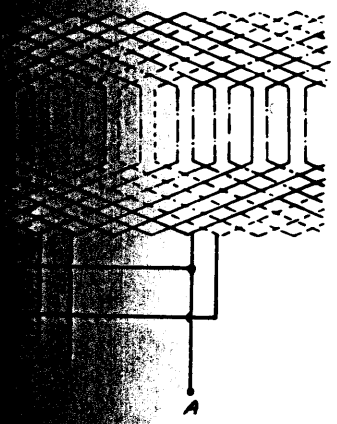

[illegible] 115 VOLT STATORS

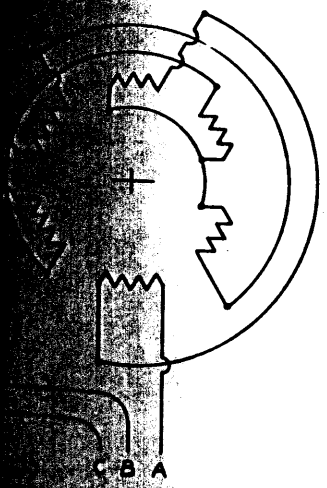

[illegible] DIAGRAM FOR 440 VOLT STATORS
[illegible] ROTATION AS VIEWED FROM LEAD END

CLASSIFICATION DATA

MFR'S. TYPE: 777H SPEED CLASS: CONSTANT
ENCLOSURE: SUBMERSIBLE
DUTY: CONTINUOUS IDLING IN AIR: CONTINUOUS
RATED H.P.: 5 RATED RPM: 3450 CYCLE 60 PH. 3
DESIGN: A. C. INDUCTION TYPE ROTOR: SQUIRREL CAGE
INSULATION: CLASS A & B NAVY SERVICE A
AMBIENT TEMP.: 40 C (AIR) 30 C (WATER)

VOLTAGE	440	220	115
FULL LOAD AMPS.	9.0	15	30
LOCK. ROTOR AMPS.	30	60	120
START. LOAD AMPS.	15	30	60
FULL LOAD P. F. %	87	87	87

MASTER DRAWING MOTOR WINDING DIAGRAM AND DATA FOR A.C. PORTABLE SUBMERSIBLE PUMP MODELS 777D, H ALUM & BRONZE	PROSSER INDUSTRIES INC. ANAHEIM, CALIFORNIA DWG. NO. 576906	
	NAVSEA NO.	REV.
	F 3,175,593	E
SCALE ____ WT. ACTUAL	CONT ON SHT. ____ SHT. NO.	

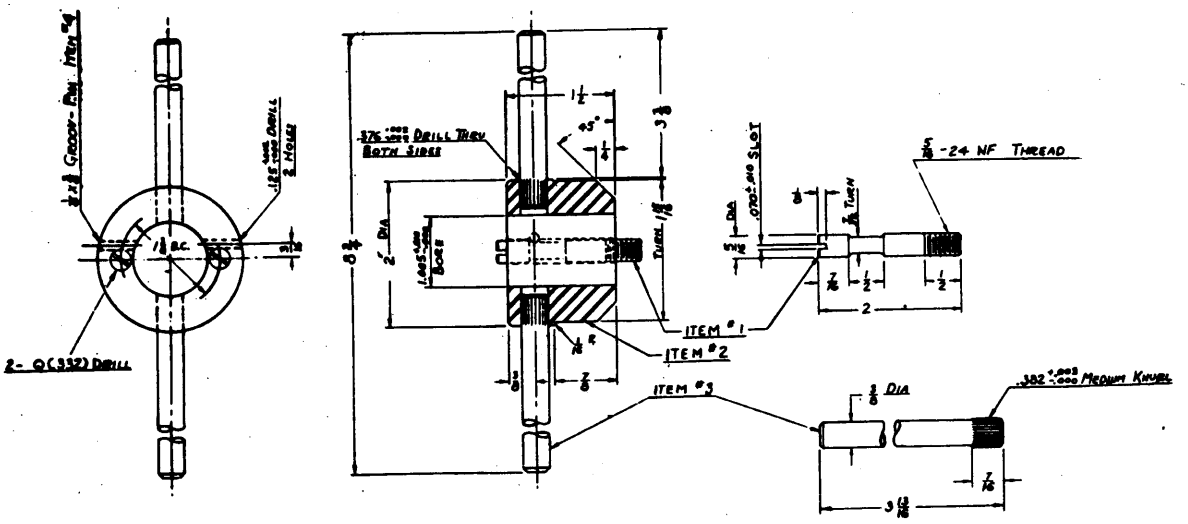

SHAFT HOLDING FIXTURE (NON-MAGNETI
ITEM NO. 3 SERVICE PART NO. 1570
NATIONAL STOCK NO. 9C4320-00-4
MATERIAL - ITEMS 1, 2 & 3 EVERDUR
ITEM NO. 4 303 STAINLES

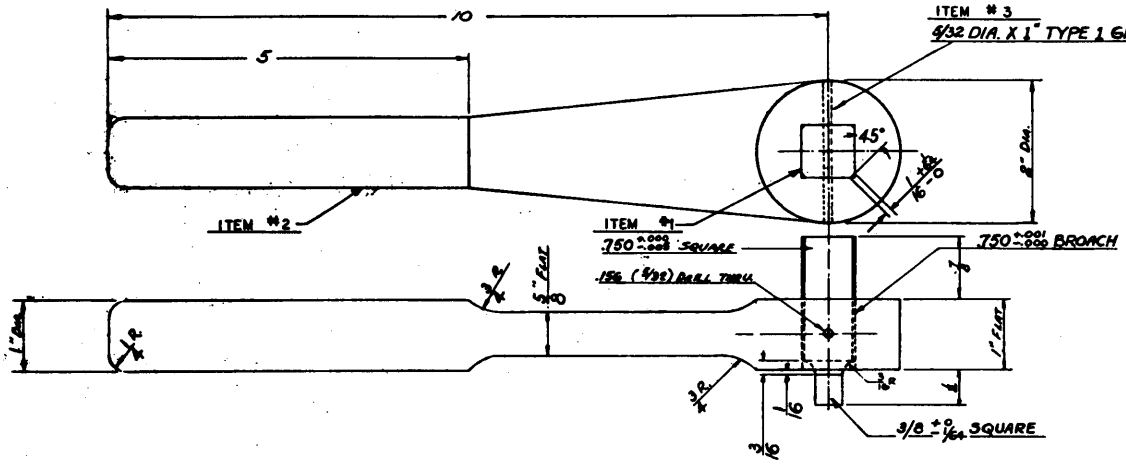

WRENCH (NON-MAGNETIC)
ITEM NO. 5 SERVICE PART NO. 5686AB
NATIONAL STOCK NO. 9G5120-00-221-795
MATERIAL - ITEMS 1 & 3 18-8 CRES
ITEM 2 ALUMINUM 356T6

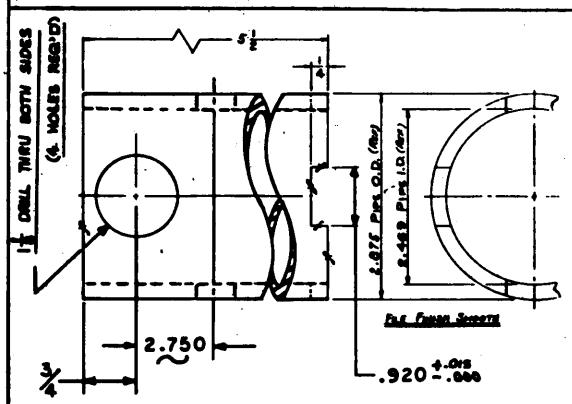

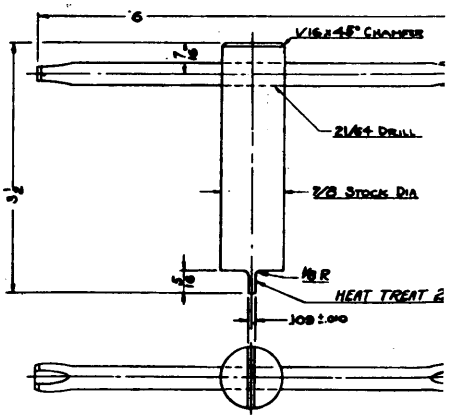

SULPHUR SEAL ROTATING WRENCH (NON-MAGNETIC)
ITEM NO. 1 SERVICE PART NO. 1487AB
NATIONAL STOCK NO. 9G5120-00-488-0916
MATERIAL - 18-8 CRES

REVISIONS					
REV.	DESCRIPTION	MFR. DATE	MFR. APP'D	U.S.N. DATE	U.S.N. APP'D
B	[illegible]				
C	[illegible]				
D	SEE E.O.			7-62	S.M.
E	SEE E.O.			5-65	S.M.

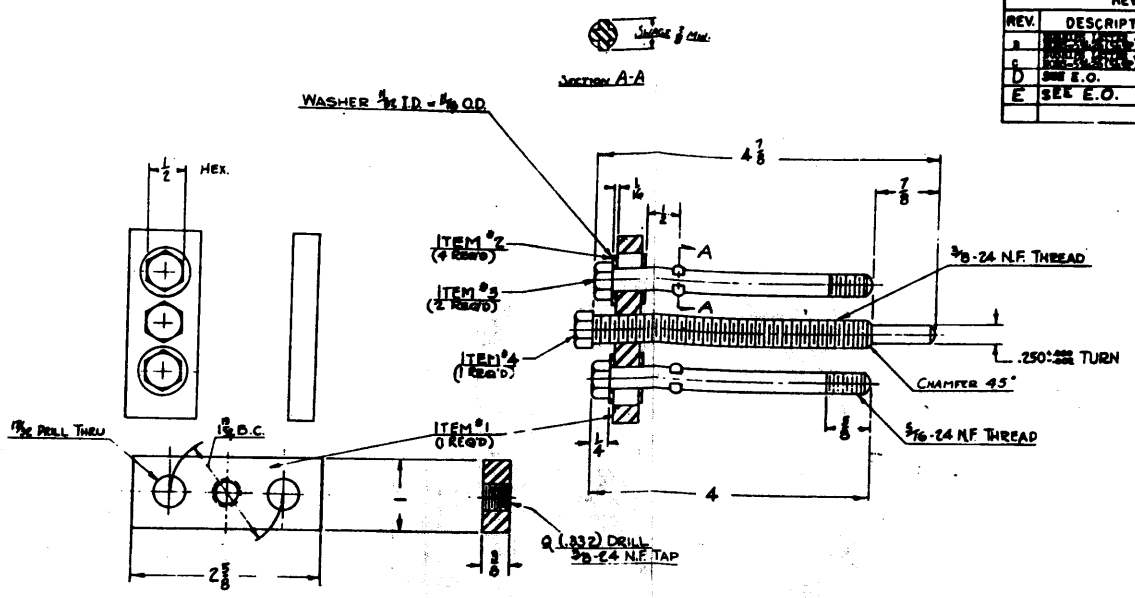

RUNNER & SPLASHER PULLER (NON-MAGNETIC)
ITEM NO. 4 SERVICE PART NO. 15703AB
NATIONAL STOCK NO. 1HS0000-LL-CE2-9845
MATERIAL - EVERDUR NO. 1012 1/2 HARD

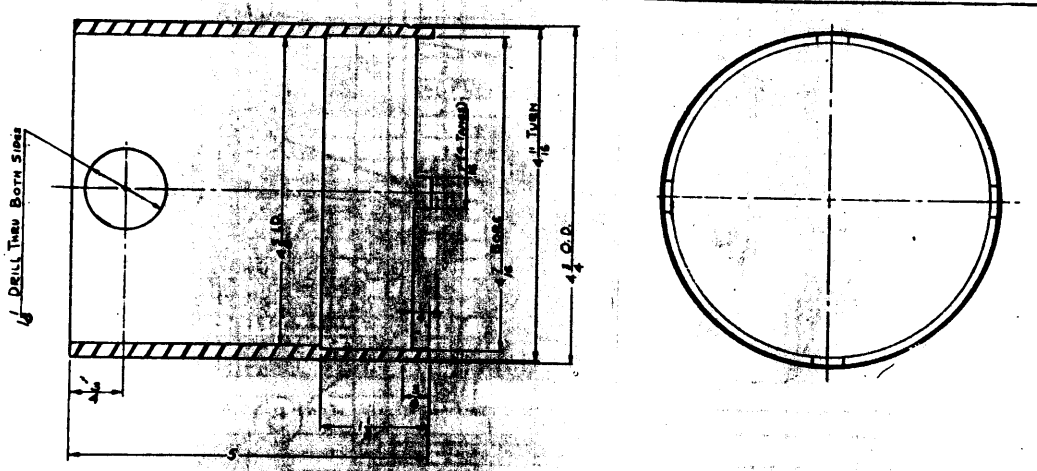

MOTOR RETAINING WRENCH (NON-MAGNETIC)
ITEM NO. 2 SERVICE PART NO. 15701AB
NATIONAL STOCK NO. 9Q5120-00-468-0917
MATERIAL - MANGANESE BRONZE

SWAGE ENDS TO PREVENT REMOVAL

275 BRINELL

RUNNER RETAINER & LOCK SCREW WRENCH (NON-MAGNETIC)
ITEM NO. 6 SERVICE PART NO. 23600AB
NATIONAL STOCK NO. 9Q5120-00-468-0920
MATERIAL - 18-8 STAINLESS STEEL

MASTER DRAWING MISCELLANEOUS DETAILS OF TOOLS FOR A.C. & D.C. PORTABLE SUBMERSIBLE PUMP MODELS 777H & D MODELS 822H & A ALUM & BRONZE	PROSSER INDUSTRIES INC. ANAHEIM, CALIFORNIA DWG. NO. 576925	
	NAVSEA NO.	REV.
	F 3,217,862	E
SCALE	WT.	CONT ON SHT. SHT. NO.

REPRODUCTION OR MANUFACTURE OF ANY ASSEMBLY, SUB-ASSEMBLY OR PART INDICATED HEREIN, OR THE USE OF THIS PROPRIETARY DESIGN, IS PERMISSIBLE ONLY IF EXPRESSLY AUTHORIZED IN WRITING BY PROSSER INDUSTRIES

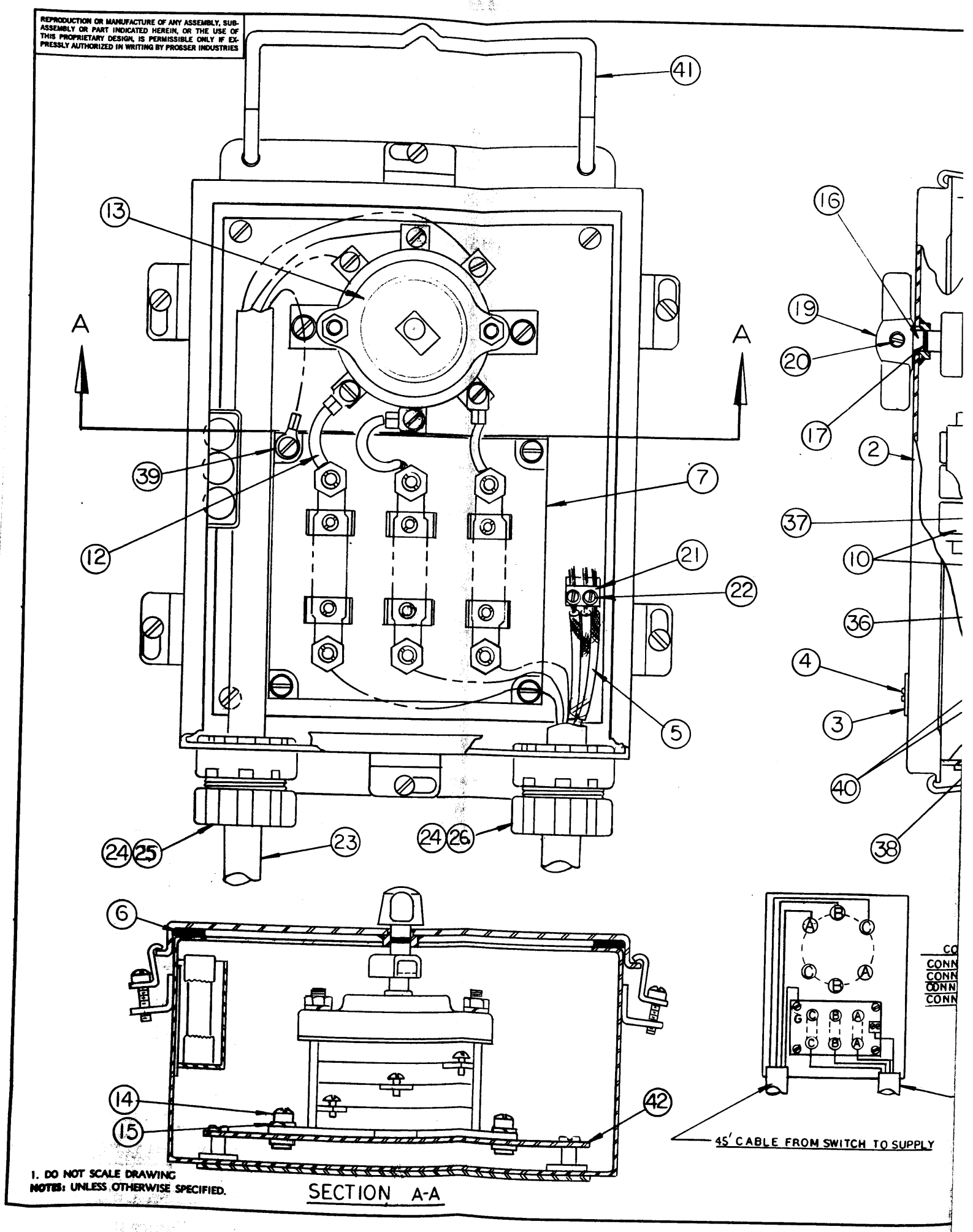

1. DO NOT SCALE DRAWING

NOTES: UNLESS OTHERWISE SPECIFIED.

INTERPRET DRAWING IN ACCORDANCE WITH STANDARDS PRESCRIBED BY MIL-STD-100

REVISIONS

LTR	DESCRIPTION	DATE	APPROVED
J	SEE E.O.	9-2-85	W.V.S.

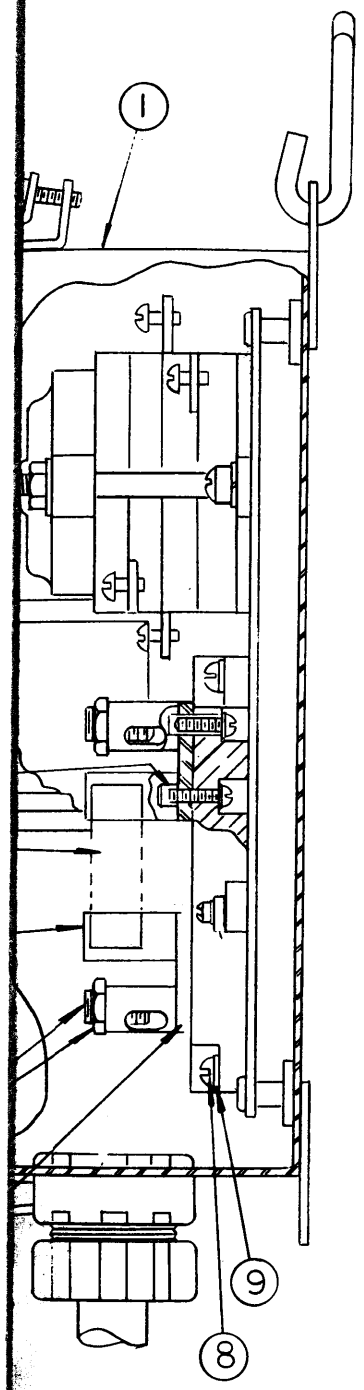

* ITEMS ALSO SUPPLIED AS REPAIR PARTS

NO.	NAME	REQ.	MATERIAL	SPECIFICATION	SERVICE PART	NAVSEA DWG. NO.	REMARKS
1	BOX ASSY.	1	STAIN STEEL	AISI 302	83681		
2	COVER ASSY.	1	STAIN.STEEL	AISI 302	83680		
3	NAME PLATE	1	BRASS	COML 20GA.032	566154-1		CADMINUM PLATE (UNDERSIDE)
4	SCREW	2	STAIN STEEL	18-8 COML.	A10632RHT3		6-32 NC-2 X 3/16 RD. HD.
5	SLEEVING	A/R	FIBERGLASS		A3551DG6		ACRYLIC COATED .166 I.D.
* 6	GASKET	1	SOLID NEOPRENE	COMMERCIAL	83683		
7	FUSE BASE	1	GLS MELAMINE	MIL PT5037A(GMG)	45655AA		
8	SCREW	4	STAIN. STEEL	18-8 COML	A11024RHT10		10-24 NC-2 x 5/8 RD.-HD
9	LOCKWASHER	4	PHOS. BRONZE	COMMERCIAL	A1553AC		#10 INTERAL SHAKEPROOF (CAD)
* 10	FUSETRON/220V		COMMERCIAL		SEE BELOW	9000-S6202-73691-5	
	" 440V		COMMERCIAL	TYPE F61	SEE BELOW	9000-S6202-73691	
	" 115V		COMMERCIAL		SEE BELOW		
12	LEAD WIRE ASSY.	3	TINNED COPPER	COMMERCIAL	73810SB-1		TYPE TW #10 AWG. 600V SERVICE
* 13	ROTARY SWITCH ASSY	1		COMMERCIAL	83661AB		
* 14	SCREW	2	STAIN STEEL	18-8 COML	A11420PHT7		1/4-20 NC-2x7/16 FIL. HD.
* 15	LOCKWASHER	2	PHOS. BRONZE	COMMERCIAL	A1441AC	9000-S6202-73691-8	CAD PLATE
16	CONN. SHAFT. ASSY.	1	NICKEL-COPP.	QQ-N-281	83670AA	9000-S6202-74089-150	
* 17	O-RING SEAL	1	NITRILE	MIL-P-5516	MS 28775-010		
19	HANDLE, SWITCH	1	BRASS	MIL-B-17668	A4108AA	9000-S6202-74089-193	
20	SCREW	1	BRASS	COMMERCIAL	A10632RHB8		6-32 NC-2x1/2 RD. HD.
21	GROUND PLATE	1	STAIN STEEL	AISI 302	83683AB		
22	SCREW	2	STAIN. STEEL	18-8 COML	A10832RHT5		8-32 NC-2 x 5/16 FIL. HD.
22A	LOCKWASHERS	2	PHOS. BRONZE		A2579		#8 INTERNAL SHAKEPROOF (CAD)
23	CABLE ASSY.	45 FT	FHOF-9	MIL-C-915	83630AA		
* 24	STUFFING ASSY. (4T)	2		MIL-S-19622/1	33249AB		
25	PACKING	1	NEOPRENE		33250AB		MIL-S-19622/19-0005
26	PACKING	1	NEOPRENE		33251AB		MIL-S-19622/19-0004
36	FUSE CLIP	6	STEEL	MIL-F-21346/1D	A1317AB		FC 21DF, COPPER CLAD.
37	FUSE CLIP NUT	6	BRASS 1/2 HARD	COMMERCIAL	33289AB	9-S-4296-L-3	
37A	FUSE CLIP SCREW	6	BRASS	COMMERCIAL	A10832RHB10		#8-32 NC-2x5/8 RD. HD.
37B	FUSE CLIP WASH	6	PHOS.BRONZ.	COMMERCIAL	A2579		#8 INTERNAL SHAKEPROOF (CAD)
38	TERMINAL ASSY.	6	BRASS	COMMERCIAL	83655AA	9000-S6202-73055-42	
38A	MOUNTING SCREW	6	BRASS	COMMERCIAL	A11024RHB8		#10-24 NC-2x1/2 RD.HD.
38B	LOCKWASHER	6	PHOS. BRONZE	COMMERCIAL	A1553AC		#10 INTERNAL SHAKEPROOF (CA
* 39	GROUND LEAD TERM.	1	SOFT COPPER	COMMERCIAL	A2926AA3	9-S-1841H-37	12-10WIRE #10 STUD T&B STAKO
40	TERM. SCREW ASSY.	6	BRASS	COMMERCIAL	83651AA	9000S6202-73055-22	
41	HANDLE, CARRYING	1	STAIN. STEEL	AISI 302	83686		
42	PANEL ASSY.	1	STAIN. STEEL	AISI 302	83684		

SWITCH ASSY.	VOLTS	ITEM NO. 10	QTY. REQ'D.
576122-10	115 V	A4053AA30	6
576122-20	220V	A4053AA20	6
576122-40	440V	A4054AA15	6

576122 J

NNECTION DIAGRAM
ECT BLACK CONDUCTOR TO Ⓐ
ECT WHITE CONDUCTOR TO Ⓑ
ECT RED CONDUCTOR TO Ⓒ
ECT GREEN CONDUCTOR TO GROUND

CONTROL SWITCH IN ACCORDANCE WITH NAVSEA STANDARD DRAWING 815-1197083

-40	-20	-10	BASIC	ITEM NO.	PART OR IDENTIFYING NO.	NOMENCLATURE OR DESCRIPTION	CODE IDENT	MATERIAL	SPECIFICATION
		1			576122-10	MOTOR START. SWITCH 115V			
	1				576122-20	MOTOR START. SWITCH 220V			
1					576122-40	MOTOR START. SWITCH 440V			

QTY REQD — LIST OF MATERIAL OR PARTS LIST

30' CABLE
FROM PUMP TO SWITCH (3 CONDUCTOR, 3 TENSION MEMBERS TO GROUND.)

BASIC DASH NO.	NEXT ASSY	FINAL ASSY	NEXT ASSY	FINAL ASSY
APPLICATION			QTY REQD	

UNLESS OTHERWISE SPECIFIED
ALL FILLET RADII .030
BREAK ALL EDGES .005/.015
TOLERANCES X ± .1, XX ± .03, XXX ± .010, ANGULARITY ± 0°30'
ALL MACHINED SURFACES 125
HEAT TREAT
PROTECTIVE FINISH

CONTRACT NO.

CHIEF ENGINEER		9/2/85
PROJECT ENGINEER		
MFG ENGINEER		12/20/83
CHECKED	E. CARTER	9/2/85
DRAWN	W.V.S.	9/2/85

PROSSER INDUSTRIES
900 EAST BALL ROAD ANAHEIM, CALIF. 92805

MOTOR STARTING SWITCH
ROTARY TYPE WITH FUSETRON
30 AMP 500 VOLTS A.C.
SYMBOL 817.1

SIZE	CODE IDENT NO.		REV
D	12439	576122	J
SCALE	WEIGHT	SHEET	OF

Page 24 Figure 10

REPAIR PARTY MANUAL ANNEX
ELECTRICAL SUBMERSIBLE PUMP OPERATIONS

Background: To provide standard procedures for complete rigging and operation of the electrical submersible pump. Due to limited use of the ESP by repair party and emergency personnel, procedures must be established to ensure safe operations and basic guidance for use.
Scope: To ensure proper and safe rigging and operation of the Electrical Submersible pump during dewatering evolutions by Repair Party personnel

RIGGING ESP

1. Repair Locker Officer will identify conditions for using a ESP for dewatering
   - Clean water, no oil, fuel or contaminates

2. Dewatering team members will lay out 440v electrical cable and handling line for electrical cable and handling line inspection, by Repair Electrician
   - If 440v extension cable is to used, then members will lay out extension cable for inspection by Repair Electrician

3. Repair Electrician will inspect 440v outlet and power available
   - If extension is required, Repair Electrician will plug 440v extension cable into 440v outlet and lay cable for connection to nearest point for final connection to ESP cable.
   - Repair electrician will energize 440v power to extension cable and verify power available at extension cable box. **(word will be passed: "STAND BY WHILE ENERGIZING 440V POWER CABLE")**

4. Repair Electrician will inspect ESP, power switchbox and plug prior to connection to 440v extension cable box. **(440V EXTENSION IS ENERGIZED TO THE CONNECTION BOX)**
   - Repair Electrician will verify that ESP power switch is in the OFF position prior to making final connection to extension cable box.

5. Upon the Scene leaders' direction and verification of ESP setup. The word will be passed (**"STAND BY WHILE ENERGIZING ESP"**)
   - Repair Electrician will make final connection to extension cable box
   - Repair Electrician will operate power switch to energize ESP
   - Scene Leader will verify pump operation.

SECURING ESP OPERATIONS

1. Scene Leader will make determination to secure dewatering operations.
   - Repair Electrician will secure ESP by operating power switch.
   - Repair Electrician will secure power at 440v outlet
   - Repair Electrician will verify 440v power is secured.