CHAPTER 2
OPERATION

2.1 INTRODUCTION.

Chapter 2 provides a description of the controls, indicators, and operating procedures for the Primary Air Supply Pack (PASP), the Reserve Air Supply Pack (RASP), and the Self-Contained Breathing Apparatus (SCBA). Appendix A is a pre-operational checklist and should be reviewed prior to operations. Procedures in this chapter are presented in the sequence of a normal operation, beginning with pre-operational inspections and ending with post-operational procedures. Emergency procedures are also provided in this chapter.

Operation of this equipment in a hazardous atmosphere considered to be Immediately Dangerous to Life or Health (IDLH) shall be conducted in accordance with NSTM S9086-CL-STM-010, Chapters 074-18 and 074-20.2

Prior to entering a hazardous space, the Commanding Officer's permission is required. All SAR/SCBA operations must be supervised by the Gas-Free Engineer (GFE) or the GFE assistant. Attendants and rescuers will be appropriately stationed nearby to respond to possible emergency situations.

The operational information in this chapter is presented as follows:

a. Controls and indicators
b. Pre-operational inspections and setup
c. Operating procedures and shutdown
d. Post-operational procedures
e. Emergency procedures

Figure 2-1 displays the general sequence of operating procedures for the SAR/SCBA.

2.2 CONTROLS AND INDICATORS.

Controls and indicators for the SAR/SCBA are displayed in Figures 2-2 through 2-5. The controls and indicators shown in each figure are identified and functionally described in Tables 2-1, 2-2, and 2-3.

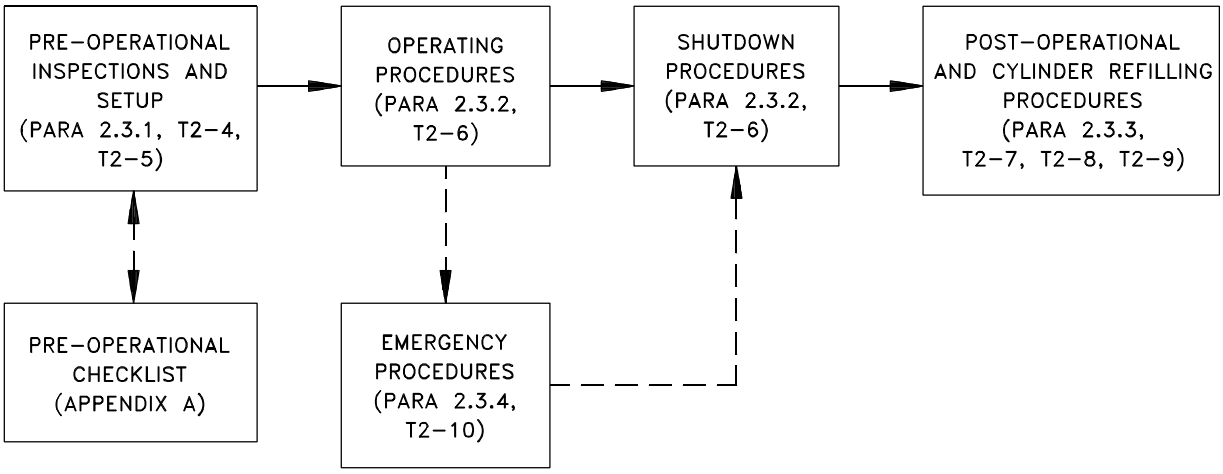

Figure 2-1. Operational Procedures Flowchart

Table 2-1. PASP Controls and Indicators (Figure 2-2)

Nomenclature	Function	Normal Operating Condition
Cylinder valve, primary HP air supply (AHP-V201) with cylinder valve pressure indicator, and rupture disk	Opens/shuts off air flow from cylinder. Indicates pressure. Provides overpressurization relief for cylinder. Connects to PASP via an HP air hose assembly.	Open (for cylinders in use or on standby)
HP air hose bleed valve (AHP-V202) for PASP cylinder (located on hose assembly)	Depressurizes hose prior to disconnecting or shutting down equipment.	Shut (spring-loaded for positive control of bleed)
Three-way ball valve (AHP-V204)	Selects cylinder to be on-line, supplying air.	Open (arrow toward on-line cylinder)
HP gauge (AHP-G201)	Displays HP air from air cylinder (0-5,000 psig).	Variable
LP gauge (ALP-G202)	Displays LP air provided to manifold (0-200 psig).	Variable
Regulator (AHP-V205)	Reduces HP air to 60-80 psig for delivery to manifold.	Open
HP gauge isolation valve (AHP-V206)	Isolates HP gauge from system in case of failure. Allows for in-place comparison calibration of HP gauge.	Open, valve stem cap installed
LP gauge isolation valve (ALP-V207)	Isolates LP gauge from system in case of failure. Allows for in-place comparison calibration of LP gauge.	Open, valve stem cap installed
LP alarm (F-024) (not shown in Fig. 2-2)	Provides audible bell signal when HP air pressure drops to 500 psig.	Silent
LP manifold bleed valve (ALP-V208)	Depressurizes system during equipment shutdown.	Shut (spring-loaded for positive control of bleed)
Quick disconnects (QDs) (F-021)	Connection points for the 75-foot, interconnecting LP air-supply hoses from PASP to SCBA.	N/A

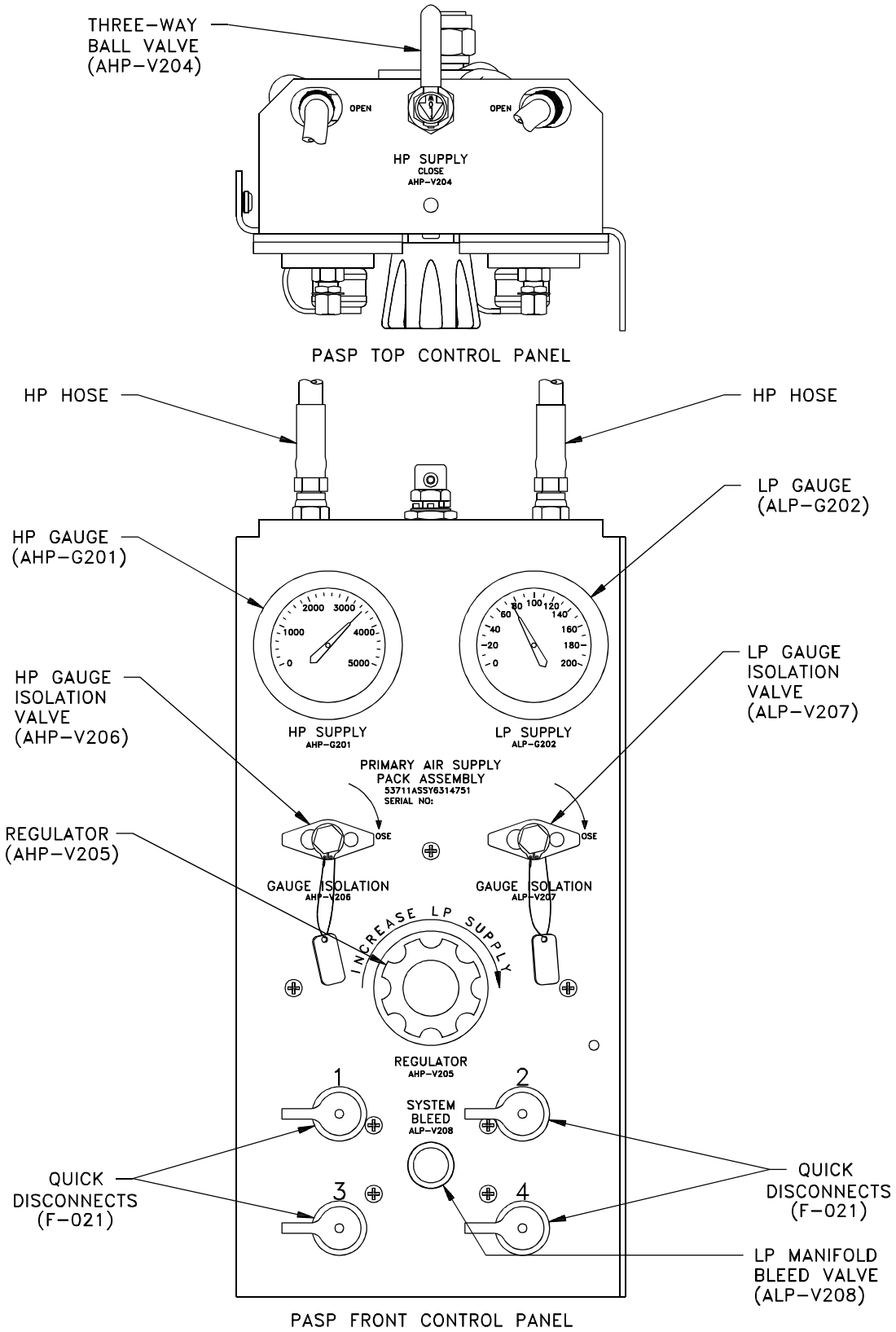

Figure 2-2. PASP Controls and Indicators (Sheet 1 of 2)

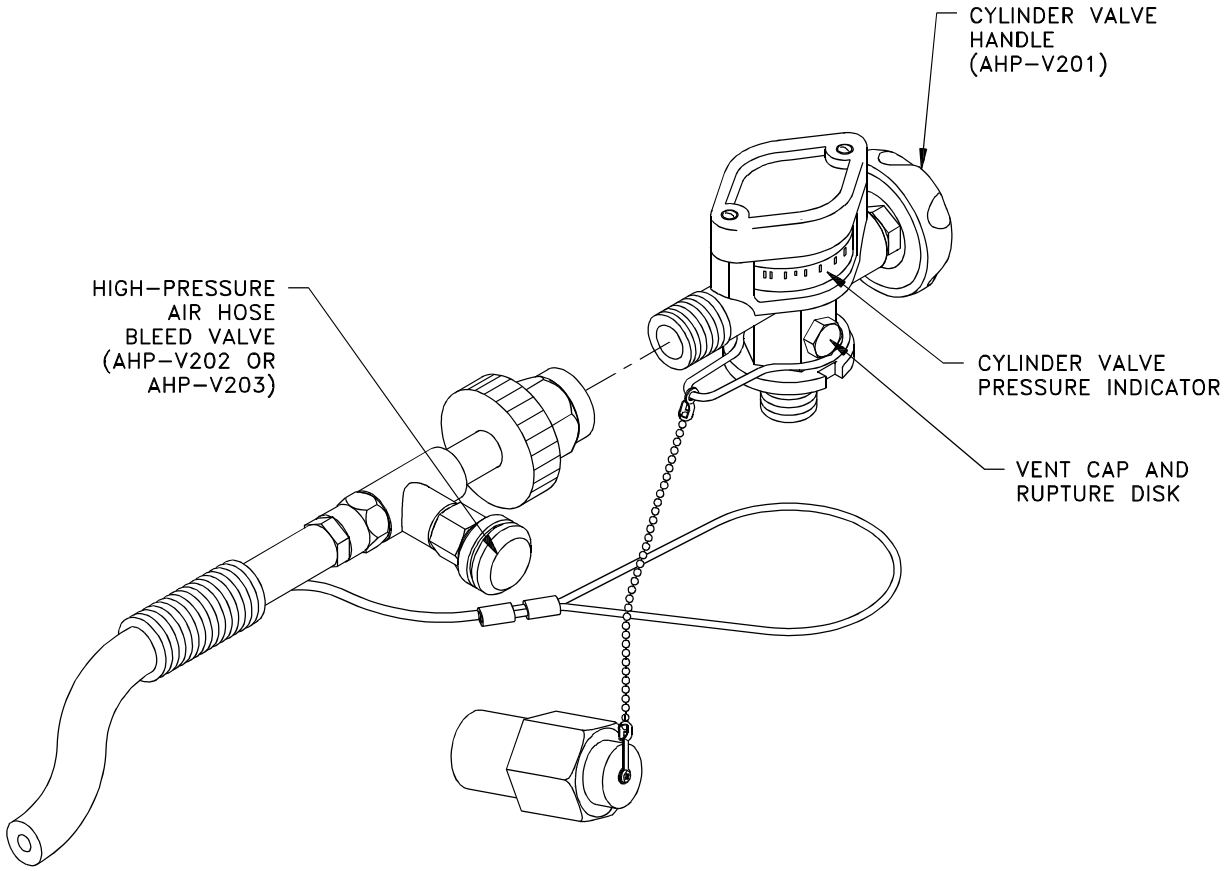

HIGH–PRESSURE AIR CYLINDER VALVE
(PASP/RASP)

Figure 2-2. PASP Controls and Indicators (Sheet 2 of 2)

Table 2-2. RASP Controls and Indicators (Figure 2-3)

Nomenclature	Function	Normal Operating Condition
Cylinder valve, primary HP air supply (AHP-V301, AHP-V302) with cylinder valve pressure indicator, handle, and rupture disk	Indicates cylinder pressure. Opens and shuts off airflow from cylinder.	Open (for cylinders in use or on standby)
HP air hose bleed valve (AHP-V203) for RASP cylinder (located on hose assembly)	Depressurizes hose prior to disconnecting or shutting down equipment.	Shut (spring-loaded for positive control of bleed)

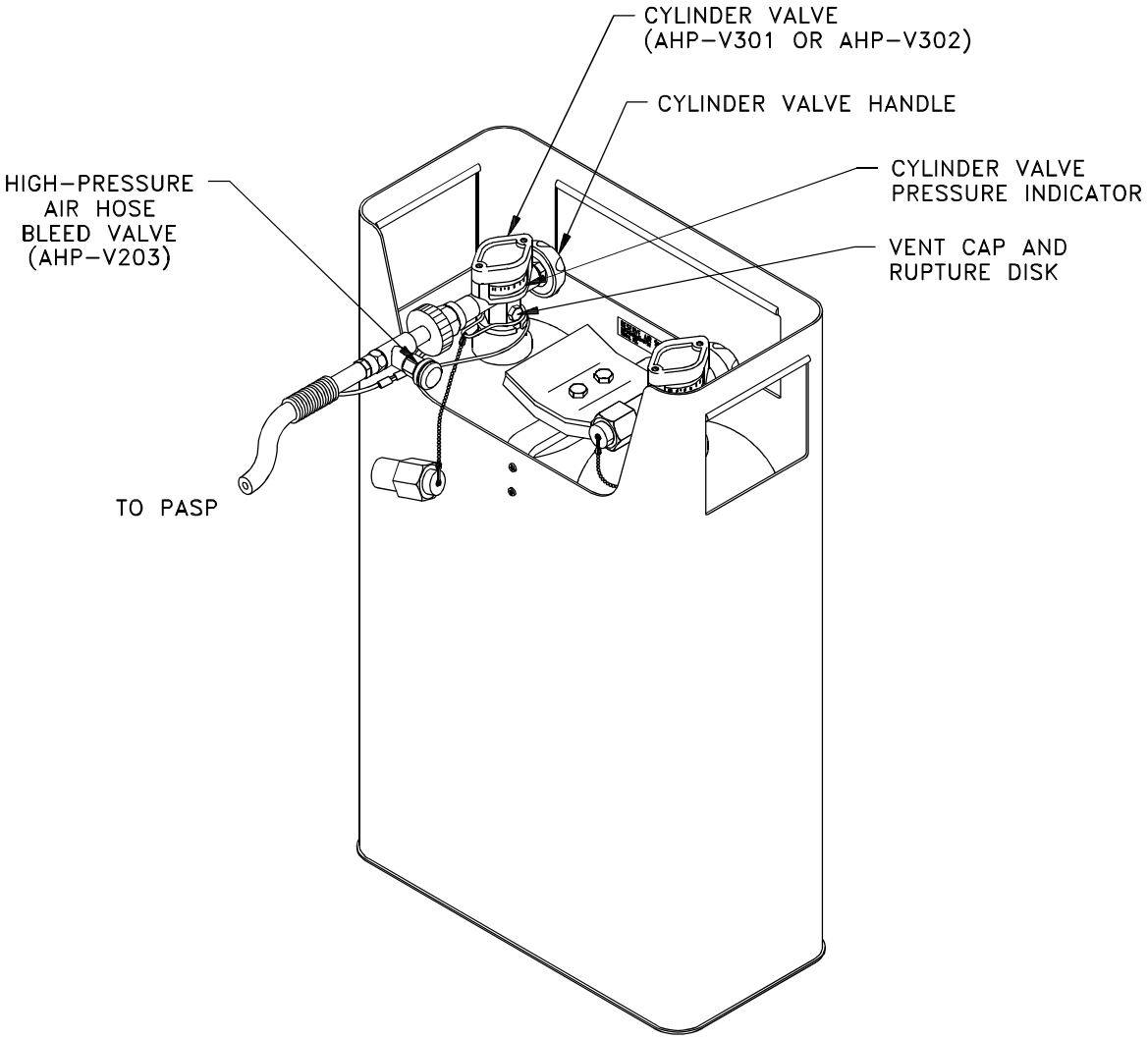

Figure 2-3. RASP Controls and Indicators

Table 2-3. SCBA Controls and Indicators (Figure 2-4)

Nomenclature	Function	Normal Operating Condition
Exhalation valve	Maintains positive pressure in facepiece. Releases exhaled air to ambient atmosphere.	Shut (except during exhalation)
Speaking diaphragm assembly	Provides a means of communication between SCBA users. Located in the facepiece.	N/A
Inlet check valve	Automatically starts airflow to the facepiece. Governs flow rate.	Open (except during exhalation)
Mask-mounted (second-stage) regulator (MMR)	Pressure-demand regulator that reduces airflow to a breathable pressure level.	Variable
Semiautomatic push button (don/doff)	Conserve air when donning and doffing the facepiece. Located on the MMR.	Open (don)
MMR nut	Allows operator to manually attach MMR to facepiece.	Tightened
First-stage regulator	Reduces HP air to 60-80 psig.	Open
Alarm	Provides audible whistle when 75-80% of air in cylinders is depleted. Alarm sounds until all air is depleted.	Silent
Cylinder valve	Allows operator to manually activate (open) the SCBA air cylinders.	Shut
Check valve	Prevents the self-contained air supply from bleeding when external air supply is disconnected or fails.	Open
CGA-346 nut	Allows operator to manually connect/disconnect first-stage regulator from manifold.	Tightened
Cylinder valve pressure indicator	Indicates air pressure levels in SCBA air cylinders.	Variable
Hydrostatic test label	Indicates date of last hydrostatic test.	Attached

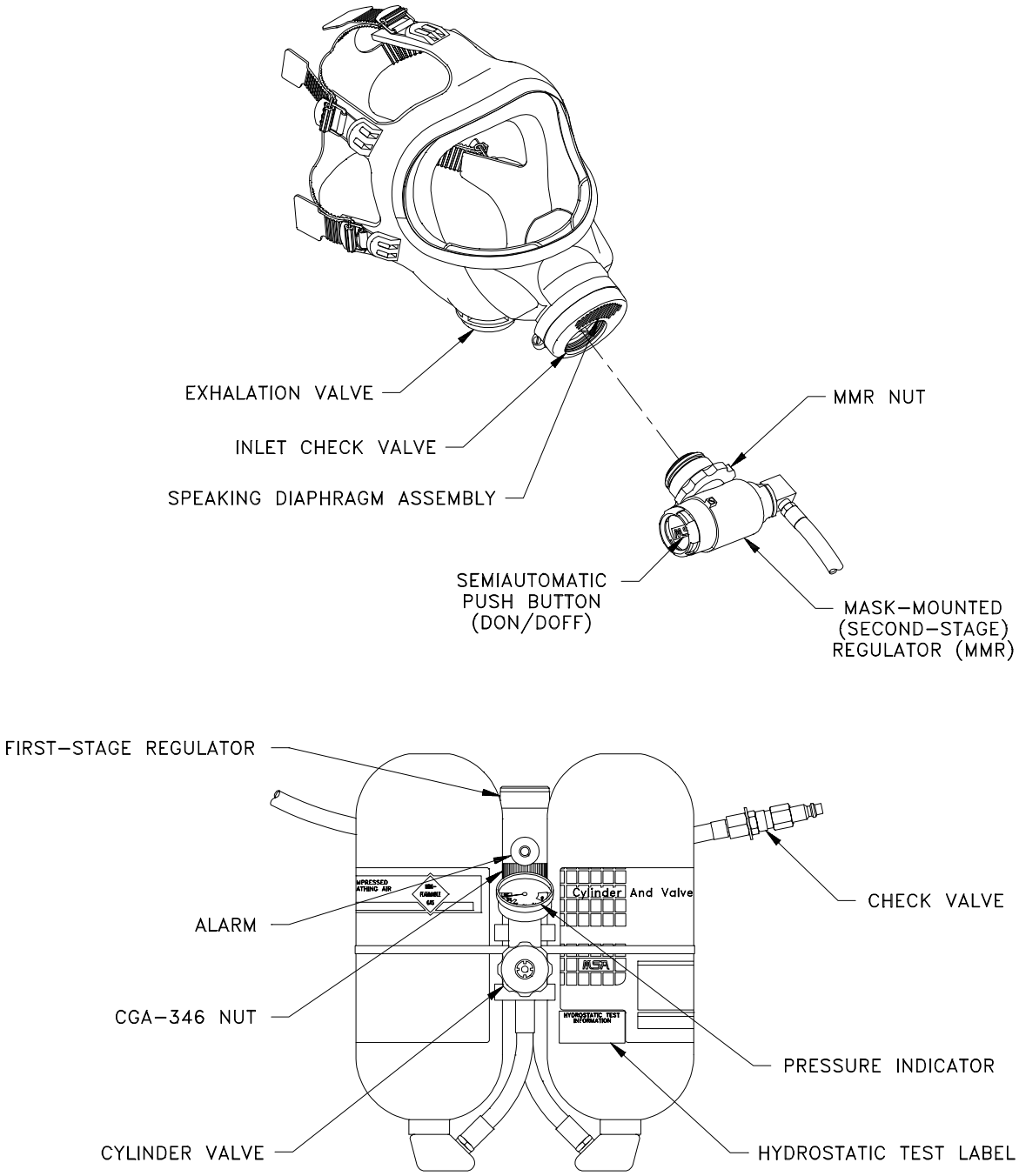

Figure 2-4. SCBA Controls and Indicators

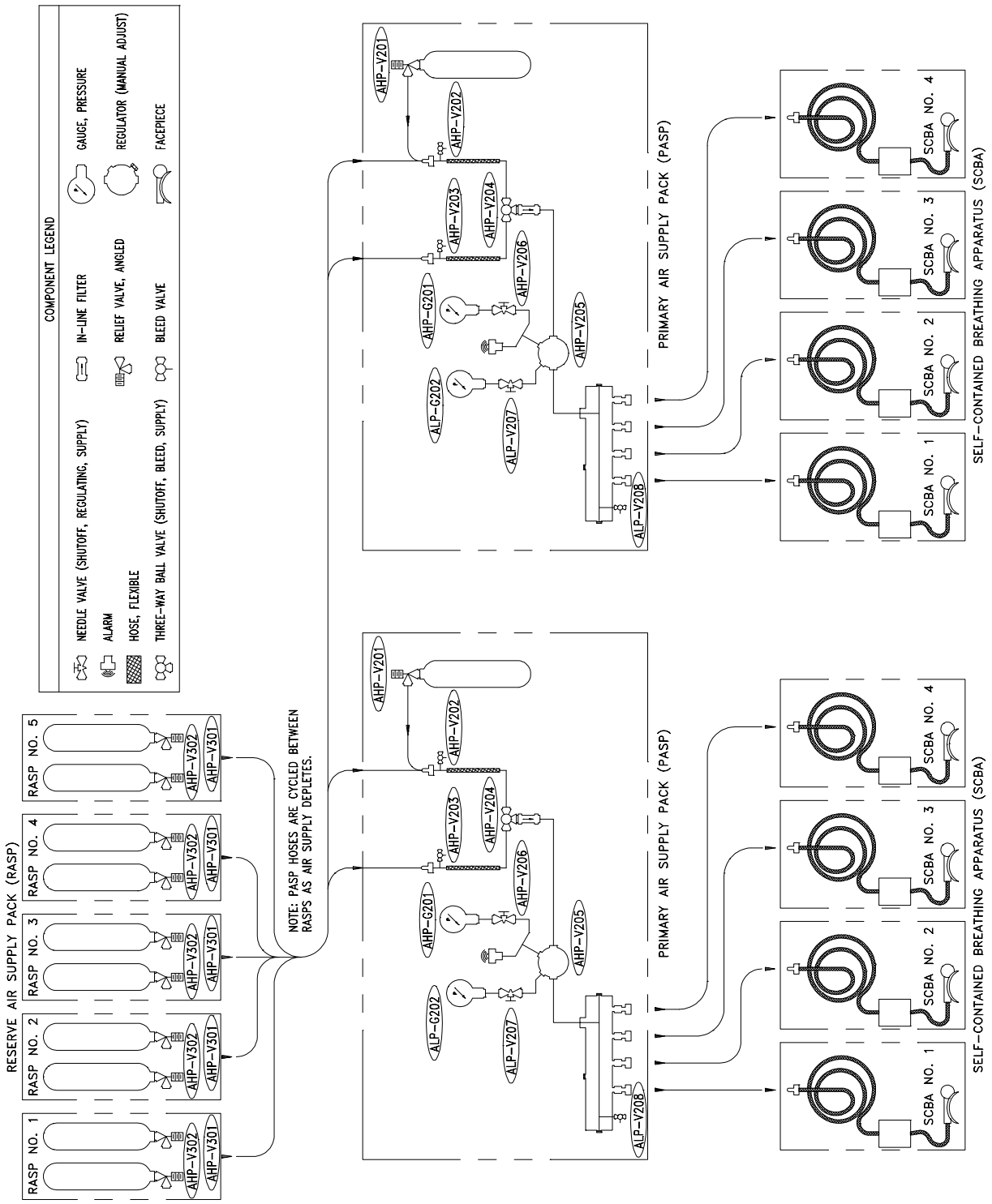

Figure 2-5. SAR/SCBA Controls and Indicators Designation

2.3 OPERATING PROCEDURES.

WARNING

PASP/RASP operators and SCBA user personnel shall perform the operating procedures presented in this manual. Failure to perform prescribed procedures may result in equipment failure, injury, or death to personnel.

The SCBA PremAire® CADET 15M Respirator will perform as designed only if used and maintained IAW this manual. Failure to follow instructions may result in damage to equipment, injury, or death to personnel.

To ensure proper protection, SCBA facepiece fit shall be checked before each operation. Ensure that facial hair, including beard, sideburns, and mustache, and articles, such as skull caps, do not prevent a proper face seal. Leakage caused by hair or caps may lead to serious injury or death.

Spectacles, if worn, must be approved for use with Oxygen Breathing Apparatus (OBA) or those recommended by the SCBA manufacturer. Accidental exposure to contaminated air can cause serious eye injuries or blindness.

Use SCBA with adequate skin protection when worn in gases and vapors that may harm skin.

2.3.1 PASP, RASP, and SCBA Pre-Operational Inspections and Setup. The pre-operational inspection and setup procedures are performed to ensure specific operational conditions are in effect prior to use of the SAR/SCBA in a potentially hazardous atmosphere. Pre-operational inspections include equipment checkout for damage and degradation and appear in Tables 2-4 and 2-5. A pre-operational checklist is provided in Appendix A.

Prior to operating any of the equipment, all PASP/RASP operators, SCBA users, and rescuers/attendants must become thoroughly familiar with its capabilities and procedures. Additionally, operators and users should ensure that the appropriate Planned Maintenance System (PMS) has been performed on the equipment prior to placing it into operation.

2.3.2 Operating Procedures. Operating procedures for the SAR/SCBA are presented in Table 2-6. The setup procedures are necessary to bring the equipment from the STANDBY condition to the operating mode. Prior to deployment, SCBA users shall test the system to ensure there is an adequate air supply to the facepiece. The shut-down procedures include all steps necessary to bring the equipment from full operation to the OFF condition.

2.3.3 Post-Operational and Air Cylinder Refilling Procedures. Upon completion of SAR/SCBA operations, all the equipment is shut down, and SCBA users separate from the system by disconnecting from the QD(s). Table 2-7 provides post-operational procedures that need to be performed prior to storage. Post-operational procedures for refilling cylinders appear in Tables 2-8 and 2-9.

NOTE

If it is anticipated that either PASP/RASP HP air cylinders or SCBA HP air cylinders will be depleted/recharged more often than every other day, on average, during the 15-year life of these cylinders, contact the SAR/SCBA In-Service Engineering Agent (ISEA) (see paragraph 4.3).

Detailed procedures for inspecting, cleaning, and testing the SAR/SCBA are provided in the PMS requirements. Procedures for preparing the equipment for storage are provided in Chapter 8, Installation.

Maintaining adequate air purity is essential when refilling SAR/SCBA cylinders. Air quality for all cylinders must meet or exceed standards established by the Compressed Gas Association (CGA). This means that air quality must be Grade D or higher. The standards require that the air contain no more than 10 parts per million (ppm) of carbon monoxide, no more than 1,000 ppm of carbon dioxide, and no more than 5 milligrams per cubic meter of oil vapor or oil particulates. Water content of compressed breathing air must be equal to or less than a dew point of -65°F. SAR/SCBA system users and operators are responsible for ensuring the cylinders are properly recharged and filled.

2.3.3.1 Refilling PASP/RASP Air Cylinders.

WARNING

Do not fill if damage to fiberglass overwrap is evident.

The PASP/RASP HP cylinders shall be refilled after the completion of each operation. Table 2-8 provides the step-by-step procedures.

2.3.3.2 Refilling SCBA Air Cylinders.

WARNING

SCBA cylinders which show evidence of exposure to high heat or flame, e.g., paint turned brown or black color, decals charred or missing, gauge lens melted, or elastomeric materials distorted, shall be removed from service and hydrostatically tested prior to recharging. Failure to follow this warning could result in serious injury or death.

Use a regulated air supply set to 3,000 psig for SCBA cylinders. Failure to use a regulated air supply set to proper pressure could result in serious injury or death.

CAUTION

Use air conforming to the ANSI/CGA Specification G-7.1-1989 for quality verification level (Grade) D air or higher (ANSI Standard Z86.1). Air delivered to LP air-supply hose must be respirable. Air must have a dew point of –65°F or lower.

Do not partially charge SCBA cylinders. Always charge to 3,000 psig. Partially charged cylinders reduce emergency air supply.

The SCBA air cylinders shall be refilled after the completion of each operation. Personnel recharging the cylinders shall read and comply with all directions on the label. Table 2-9 provides the step-by-step procedures.

Prior to recharging, the SCBA cylinders shall be examined externally for signs of exposure to high heat, corrosion, or other damage. If there is any doubt about the suitability of the cylinder for recharging, return it to a DOT-certified hydrostatic test facility for examination and retesting.

2.3.4 Emergency Procedures.

WARNING

If SCBA user experiences breathing difficulties or smells contaminants, user must immediately exit to a safe area. Failure to follow this warning could result in serious injury or death.

Contaminants can enter an air-line respirator system when air-supply hoses are reconnected in a contaminated atmosphere. User must determine potential risk and take necessary precautions, which may require that NO disconnection of air-supply hoses be permitted in a contaminated atmosphere. If in doubt, DO NOT disconnect. Failure to follow this warning could result in serious injury or death.

NOTE

The supervisor shall be immediately informed of any air supply problems.

The emergency procedures (Table 2-10) cover equipment operations during emergency conditions, such as loss of air-flow. As a final corrective action, the user may activate the SCBA cylinders by opening the cylinder valve. Use this method only for escape. When the SCBA cylinder valve is opened, the cylinders contain approximately 15 minutes of air to allow the user time to escape the work space. Once the cylinder valve is open, the SCBA user is required to exit to a safe area.

Table 2-4. PASP/RASP Pre-Operational Inspections and Setup

Step	Procedure
1. Inspect PASPs/RASPs.	a. Inspect air cylinder(s) pressure indicator reading. Air cylinder(s) pressure should be 4,500 psig. **NOTE** HP air supply requirements for the operation may allow for an initial air supply of less than 4,500 psig. b. Visually inspect PASP and RASP weldments (case assemblies) for cracks and other damage that could cause difficulty in handling the unit. c. Visually inspect PASP control panel assembly for missing hardware, including wire rope or damaged components. d. Ensure PASP and RASP HP air cylinder hold-down bracket bolts are tight. **NOTE** Cylinders marked "LUXFER X X 97 (or later year date)" are the same model as previously required, but the manufacturer has changed the outer dimensions. The cylinders are shorter in length and require a cylinder pad to allow the securing of them in PASP/RASP cases. e. Inspect HP air hose assemblies for damage to seat on male CGA-347 fittings that connect to HP air cylinder valves; frayed, damaged, or missing wire rope or nylon serving cord attaching wire rope to hose; damaged or missing caps. Ensure bleed valve turns freely and is intact.
2. Inspect PASP HP and LP gauge calibration stickers.	Do not operate PASP if calibration dates are not current. a. Check the HP gauge (AHP-G201) and the LP gauge (ALP-G202) on the PASP control panel assembly. Ensure the labels are readable and that the gauges are in calibration; i.e., the current date is earlier than the calibration due date. b. If the gauges are not in calibration, calibrate IAW ship's calibration program (METCAL).
3. Check all moving parts on PASPs/RASPs.	**CAUTION** Do not jam valves in OPEN or SHUT positions. a. On charged PASP/RASP air cylinders, leave all charged air cylinder valves shut to avoid depleting air supply. b. Cycle valves; valves should operate smoothly with moderate effort, Return valves to designated position: (1) Three-way ball valve (AHP-V204) OPEN-CLOSED-OPEN-CLOSED. (2) Regulator (AHP-V205) fully CW - fully CCW (closed). (3) HP gauge isolation valve (AHP-V206) fully CW - fully CCW (open). (4) LP gauge isolation valve (ALP-V207) fully CW - fully CCW (open).

Table 2-4. PASP/RASP Pre-Operational Inspections and Setup - Continued

Step	Procedure
3. Check all moving parts on PASPs/RASPs. **- continued**	b. (5) LP manifold bleed valve (ALP-V208) fully open CW, spring return to fully shut CCW position. (6) HP air hose assembly bleed valves (AHP-V202 and AHP-V203) fully open CW, spring return to fully shut CCW position. **NOTE** If valve(s) do not operate properly, remove and replace in accordance with Chapter 6 of SAR/SCBA technical manual.
4. Inspect all PASP/RASP HP air hoses including all end fittings.	**CAUTION** Hose and fittings shall not be painted; however, replacement is not necessary when only a few drops of paint have fallen on hose or fitting. Do not attempt to remove paint; solvents and abrasives will damage hose. a. Inspect hose and fittings for large painted area. b. Inspect fittings for pitting, cracks, and corrosion or damage, particularly to seating surfaces. c. Inspect hose for cuts, tears, gouges, cracks, or loose fittings. **NOTE** If any of these conditions are noted or, for any reason, the hose is suspected of being weak, hydrostatically test IAW PMS requirements.
5. Attach HP air hose assemblies to selected PASP/RASP cylinders.	a. Ensure three-way ball valve (AHP-V204) is in OFF (closed) position. b. Determine which HP air cylinders will supply air for initial use (PASP or RASP). c. Loop wire rope lanyard around base of air cylinder valve. d. Attach air hoses to selected primary and secondary air cylinder valves (AHP-V201 and AHP-V301 or AHP-V302) by connecting CGA-347 hand-tight nut fittings.
6. Verify that HP gauge isolation valve (AHP-V206) is open.	**WARNING** Caps on HP gauge isolation valve (AHP-V206) and LP gauge isolation valve (ALP-V207) are under pressure. Do not remove caps when system is pressurized. Operator must wear protective eyewear when opening either gauge valve. Opening caps when system is pressurized may cause injury or death. Ensure (AHP-V206) is open (fully counterclockwise (CCW)).
7. Select HP air cylinder.	Turn three-way ball valve (AHP-V204) handle to OPEN position (arrow toward HP air hose from selected cylinder).

Table 2-4. PASP/RASP Pre-Operational Inspections and Setup - Continued

Step	Procedure
8. Place HP air cylinder on-line.	a. Turn selected HP air cylinder valve (AHP-V201, AHP-V301, or AHP-V302) fully CCW. b. Ensure HP gauge (AHP-G201) reads 4,500 psig (nominal). **NOTE** (HP air supply requirements for the operation may allow for an initial air supply of less than 4,500 psig.)
9. Verify LP gauge isolation valve (ALP-V207) position, LP gauge pressure (ALP-G202), and adjust regulator (AHP-V205).	a. Ensure ALP-V207 is open (fully CCW). b. Slowly turn AHP-V205 (CW) to obtain 80 psig on LP gauge (ALP-G202).
10. Perform gross leak test of SAR.	a. Shut HP air cylinder valve (AHP-V201, AHP-V301, or AHP-V302). b. Note HP gauge (AHP-G201) reading. c. Wait 1 minute. d. Note pressure on HP (AHP-G201). e. If difference between initial reading and 1 minute reading on HP gauge is less than 50 psig, test is complete (system not leaking). If a pressure drop greater than specified above is noted, perform leak diagnostic test and applicable repairs IAW Chapter 6 of SAR/SCBA technical manual. f. Turn three-way ball valve (AHP-V204) handle to other air cylinder (arrow toward HP air hose from other air cylinder). g. Turn selected HP air cylinder valve (AHP-V201, AHP-V301, or AHP-V302) fully CCW. h. Repeat Steps 10a through 10e with the other HP air hose pressurized.
11. Turn three-way ball valve (AHP-V204) to closed position.	Turn AHP-V204 to closed position (arrow toward center).
12. Bleed down PASP and test LP alarm.	Turn AHP-V208 clockwise (CW) and hold open. This is a spring-loaded valve that will spring shut unless held open manually. Bleed down LP manifold until HP gauge (AHP-G201) reads 500 ± 50 psig at which time alarm should sound. After alarm sounds, continue bleeding air until LP gauge (ALP-G202) reads 0 psig.
13. Set regulator (AHP-V205).	Turn AHP-V205 fully CCW.
14. Place HP air cylinder(s) on-line.	Turn HP air cylinder valve(s) (AHP-V201, AHP-V301, and/or AHP-V302) fully CCW.
THE SAR (PASP/RASP) IS NOW IN THE READY CONDITION.	All PASP/RASP airflow valves are open except the three-way ball valve (AHP-V204) and the regulator (AHP-V205). Proceed to Table 2-6.

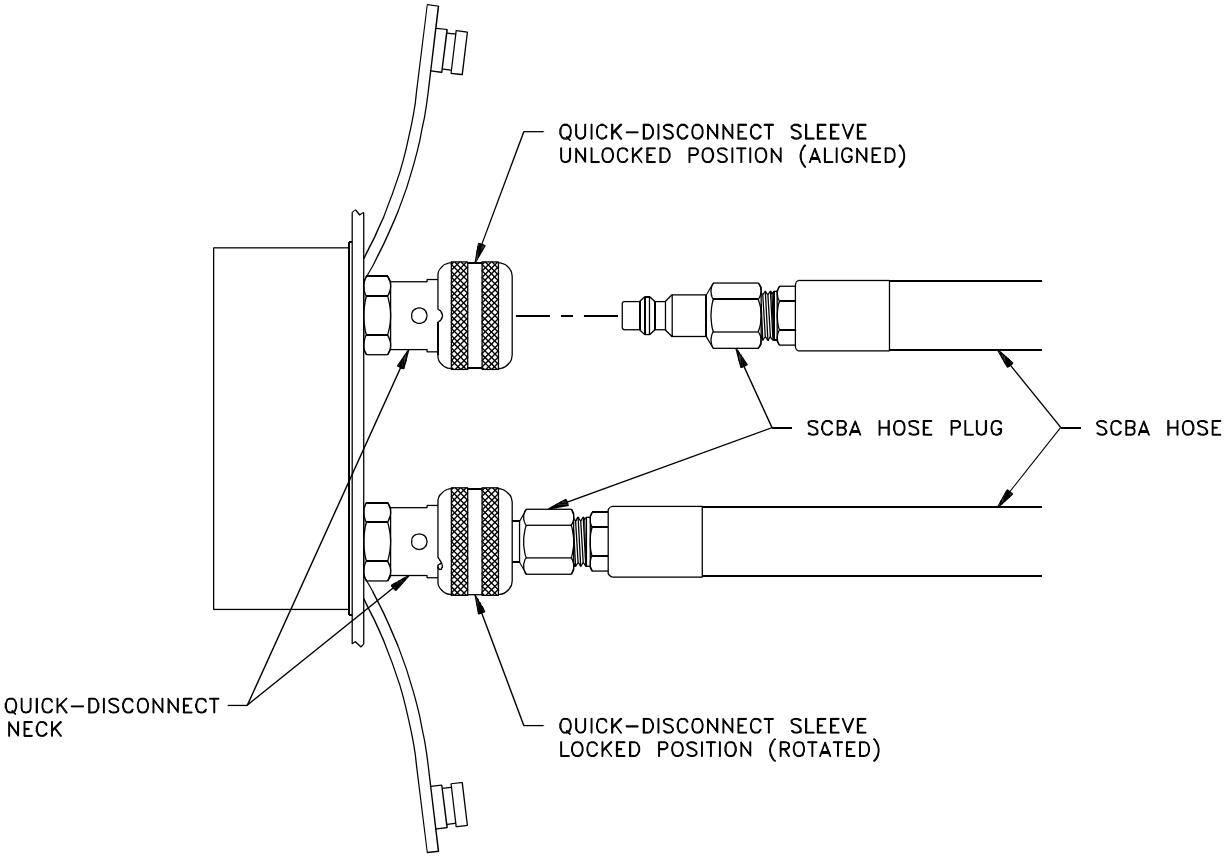

Figure 2-6. Connecting SCBA Hose to PASP Quick Disconnects (QDs)

Table 2-5. SCBA Pre-Operational Inspections and Setup

Step	Procedure
1. Inspect SCBA(s) air cylinder pressure and connections.	**CAUTION** If SCBA air cylinder pressure is below 2,500 psig, cylinder should be refilled to 3,000 psig before use. a. Inspect SCBA(s) air cylinder valve pressure indicator reading. Air cylinder pressure should be 3,000 psig. b. Inspect air cylinder hose connections for damage or abrasions.
2. Inspect SCBA breathing apparatus (the fit test for the facepiece shall be done yearly).	a. Inspect facepiece and hoses for pliability and deterioration; stretch rubber and inspect for cracks. b. Inspect head harness for cuts and tears. c. Remove MMR from facepiece. Inspect MMR O-ring between regulator and facepiece for dry rot and damage. d. Inspect Ultravue® Facepiece lens for cracks, scratches, and tight seal with facepiece rubber. e. The facepiece exhalation valve must be clean and easy to operate. To check operation, reach into facepiece and depress and release center valve stem several times. Valve must move off seat and return when released. If valve sticks, open by pushing on center of valve stem inside facepiece and flush with fresh water. Ensure valve works properly prior to stowing facepiece. f. Inspect plastic facepiece inlet assembly for damage or cracks. Check to be sure spider gasket and inhalation disk valve are present and not damaged or deteriorated. g. Inspect SCBA carry pouch, waist belt, and shoulder strap for tears or other damage.
3. Determine how many sections of 75-foot, LP air-supply hoses will be required.	**CAUTION** MSA air-supply hoses have various temperature limitations. DO NOT use the SCBA whenever ambient or inlet air temperatures are below -25°F or above 212°F. Determine how many sections of LP air hose are required per SCBA (maximum of four).
4. Inspect all LP air hoses and interconnect required LP hoses.	**CAUTION** Hose and fittings shall not be painted; however, replacement is not necessary when only a few drops of paint have fallen on hose or fitting. Do not attempt to remove paint; solvents and abrasives will damage hose. a. Inspect hose and fittings for large painted areas. b. Inspect fittings for pitting, cracks, and corrosion or damage, particularly to seating surfaces.

Table 2-5. SCBA Pre-Operational Inspections and Setup - Continued

Step	Procedure
4. Inspect all LP air hoses and interconnect required LP hoses. **-Continued**	c. Inspect hose for cuts, tears, gouges, cracks, or loose fittings. **NOTE** If any of these conditions are noted, or for any reason the hose is suspected of being weak, hydrostatically test IAW PMS requirements. **CAUTION** Failure to rotate sleeve on quick disconnect (QD) after connection is made may result in separation of couplings during use. Do not use other types of quick disconnect couplings to interconnect Model 5-1002-1 air-supply hose. d. Interconnect required number of LP air hoses. (1) To interconnect 75-foot LP air hoses, grasp female QD, align recess on QD sleeve with dimple on QD neck. Slide sleeve toward 75-foot hose. (2) Insert male plug into female QD and release sleeve on QD. (3) Rotate QD sleeve so that recess and dimple are no longer aligned. Gently pull on two sections of coupling to test connection.
5. Don personnel protective clothing, Navy-approved body harness, and SCBA unit.	**CAUTION** Users must wear suitable protective clothing, and precautions must be taken so that SCBA is not worn in atmospheres that may harm device. a. Don suitable personnel protective clothing. b. Don Navy-approved body harness. c. Don SCBA unit. (1) Grasp shoulder strap and place over head and on shoulder. (2) Connect waist strap and tighten by pulling free end through buckle. (3) Adjust shoulder strap to desired position by pulling on the adjusting strap. (4) Slide carry pouch on waist strap to position of comfort. (5) Check to make sure that pressure indicator is visible and cylinder valve is accessible.
6. Connect LP air hoses to SCBAs.	**CAUTION** Failure to rotate sleeve on SCBA QD after connection is made may result in separation of couplings during use.

Table 2-5. SCBA Pre-Operational Inspections and Setup - Continued

Step	Procedure
6. Connect LP air hoses to SCBAs. **- continued**	a. Grasp female SCBA QD and align recess on QD sleeve with dimple on QD neck. Slide sleeve toward 75-foot hose. b. Insert male plug into female SCBA QD and release sleeve on QD. c. Rotate QD sleeve so that recess and dimple are no longer aligned. Gently pull on two sections of coupling to test connection.
7. Don facepiece and conduct Air Tightness Test before each use. Perform this test any time the facepiece is donned.	a. Remove MMR from facepiece speaking diaphragm assembly by turning MMR nut CCW. b. Don facepiece. (1) Fully extend facepiece straps and don the facepiece by inserting the chin into the chin cup, then pulling headbands back over head. (2) Tighten the neck (lower) straps, then tighten the temple straps. Tighten the forehead (top) strap as needed. c. Conduct Air Tightness Test before each use of SCBA to ensure facepiece is sealed tightly. (1) Cover MMR facepiece connection with palm of hand. Inhale and hold breath for approximately 10 seconds. Facepiece should collapse and remain collapsed. (2) Remove hand from MMR facepiece connection. (3) Take a deep breath. Again place palm of hand over MMR facepiece connection, then exhale. If exhalation valve is stuck, a rush of air will be felt escaping around face-to-facepiece seal. For a stuck exhalation valve, remove facepiece and correct problem before using SCBA.
8. Check flow of air from SCBA air cylinders.	a. Turn SCBA air cylinder valve CCW to open. b. Momentarily depress and hold the don/doff button on the MMR. Check that air flows from SCBA air cylinders through MMR. c. Turn SCBA air cylinder valve CW to shut.
THE SCBAs ARE NOW IN THE STANDBY CONDITION.	SCBA air cylinder valve is shut, LP air hose(s) are connected to the SCBA, and the MMR is not connected to the facepiece. Proceed to Table 2-6.

Table 2-6. SAR/SCBA Operating Procedures

Step	Procedure
OPERATING PROCEDURES	
1. Ensure SCBA users and PASP operators have performed necessary SAR/SCBA pre-operational tests and inspections.	a. PASP operator obtain verbal confirmation to determine if the SCBA user has donned equipment and is ready to commence operations. b. SCBA user obtain verbal confirmation to determine if the PASP operator is ready to commence operations.
2. Connect the LP air-supply hose(s) to PASP QD(s) (see Figure 2-6). Up to four SCBA users may be connected (no more than four LP air hoses shall be interconnected).	**CAUTION** Failure to rotate sleeve on PASP QD after connection is made may result in separation of couplings during use. a. Remove protective dust cap from QD(s) on PASP manifold. b. Connect hose end fitting to PASP QD(s). (1) Align recess on female PASP QD sleeve with dimple on QD neck. Slide sleeve toward panel. (2) Insert male plug on SCBA hose into female, PASP QD and release sleeve on QD. (3) Rotate QD sleeve so that recess and dimple are no longer aligned. Gently pull on two sections of couplings to test connection.
3. Select HP air cylinder.	Turn three-way ball valve (AHP-V204) handle to open position (toward the HP air hose leading to the selected HP cylinder). Then ensure cylinder valve (AHP-V201, AHP-V301, or AHP-V302) is open (fully CCW) on cylinder and on next cylinder to be used.
4. Set regulator (AHP-V205).	Slowly turn regulator (AHP-V205) until pressure reads 60-80 psig on LP gauge (ALP-G202).
5. Check flow of air from PASP air cylinders to SCBA users.	a. Momentarily depress and hold the don-doff button on the MMR. Check that air flows from PASP air cylinders through MMR. (Ensure that the SCBA air cylinder valve is SHUT.) b. Screw MMR into facepiece and hand-tighten. Inhale sharply to start the airflow; the don-doff button should pop out automatically. c. Breathe on the system for 30 seconds to ensure good air quality and proper system function.
THE SAR/SCBA SYSTEM IS NOW IN THE STANDBY CONDITION.	SCBA users have confirmed airflow through the MMRs and proper function for the system. SCBA users are ready to deploy.

Table 2-6. SAR/SCBA Operating Procedures - Continued

Step	Procedure
6. Deploy SCBA users and monitor gauges. Enter work area connected to PASP. Do not open SCBA air cylinder valve unless SCBA is needed for emergency egress.	**WARNING** SCBA air cylinders must be fully charged before entering a contaminated atmosphere. Entry with less than full cylinders can result in insufficient air during escape. Do not enter contaminated atmosphere using only SCBA air cylinders. Do not enter a contaminated atmosphere that may require escape time greater than service life of cylinders, approximately 15 minutes, depending on SCBA user's respiratory rate. **Contaminants can enter an air-line respirator system when air-supply hoses are reconnected in a contaminated atmosphere. User must determine potential risk and take necessary precautions, which may require that NO disconnection of air-supply hoses be permitted in a contaminated atmosphere. If in doubt, DO NOT disconnect. Failure to follow this warning could result in serious injury or death.** FAILURE TO FOLLOW ABOVE WARNINGS COULD RESULT IN SERIOUS INJURY OR DEATH. **CAUTION** Opening SCBA air cylinder valve while in supplied-air mode will deplete cylinder's air supply prematurely. Keep valve closed until escape air supply is needed. a. PASP operator monitors LP gauge (ALP-G202) and maintains pressure at 60-80 psig by adjusting regulator (AHP-V205) as required. b. Monitor HP gauge (AHP-G201).
7. ALARM SOUNDS Audible alarm bell will sound when air pressure reaches 500 psig (as indicated by HP gauge (AHP-G201). Immediately switch to next charged HP air cylinder.	**CAUTION** PASP operator shall immediately switch to a new air cylinder. a. Turn three-way ball valve (AHP-V204) toward the HP air hose leading to next HP air cylinder. The regulator (AHP-V205) may require adjustment when next cylinder is placed on-line.

Table 2-6. SAR/SCBA Operating Procedures - Continued

Step	Procedure
7. ALARM SOUNDS **- continued** Air should be flowing from next HP air cylinder at this point.	b. Ensure HP gauge (AHP-G201) reads approximately the same as selected HP air cylinder pressure indicator.
8. Confirm regulator (AHP-V205) adjustment.	Slowly adjust regulator (AHP-V205) until pressure reads 60-80 psig on LP gauge (ALP-G202).
9. Shut down depleted HP air cylinder.	Turn HP air cylinder valve handle CW on depleted cylinder.
10. Bleed (open) HP air hose connected to depleted air cylinder.	**WARNING** Before bleeding (opening) HP air hose bleed valve (AHP-V202 or AHP-V203), ensure all personnel stand clear of area to avoid injury from flying debris. Operator shall announce "Bleeding down" to warn nearby personnel. Operator must wear protective eyewear when bleeding system to prevent eye injuries or blindness. a. Slowly turn AHP-V202/AHP-V203 valve handle CW and hold open until all air is released. b. Release HP air hose bleed valve (AHP-V202/AHP-V203). It is spring-loaded and will automatically snap shut, turning CCW.
11. Disconnect HP air hose from depleted primary HP air cylinder.	Turn CGA-347 fitting CCW to disconnect HP air hose and remove lanyard.
12. Connect HP air hose to charged air cylinder.	a. Loop wire rope lanyard around base of air cylinder valve of next air cylinder (AHP-V201, AHP-V301, or AHP-V302). b. Attach HP air hose to air cylinder valve connection; turn CGA-347 fitting CW to connect.
13. Pressurize HP air hose.	For newly attached HP air cylinder, turn HP air cylinder valve (AHP-V201, AHP-V301, or AHP-V302) CCW.
14. Replace cap on depleted HP cylinder valve air hose connection.	Replace cap by turning CW and hand-tighten.
15. Return to Step 6 to repeat cycle.	**WARNING** Ensure the HP air hose assembly connected to a depleted HP air cylinder is vented (using AHP-V202/AHP-V203) before disconnecting the CGA-347 fitting on the air cylinder.
When ready to leave the work area, proceed to an area not requiring respiratory protection.	Remain connected to air-supply hose until this "safe" area is reached.