DAMAGE CONTROL LAYOUT SKETCHES

SECTION 10 - PATCHING/PLUGGING EVOLUTION

SKETCH NO.	TITLE OF SKETCH	SHEET NO.
001	Use of Wooden Plugs and Wedges in Filling Holes	10-2
002	Plugging with Mattresses	10-3
003	Box Patch	10-4
004	Hinged Plate Patch	10-5
005	Securing Patch with Hook Bolts	10-6
006	Folding T-Patch	10-7
007	Plate Patch	10-8
008	Bucket Patch	10-9
009	Patching and Sealing Crack	10-10
010	Caulking Thin Plating and Torn Seams	10-11
011	Cloth Patch	10-12
012	Emergency Leak Plugging Using Flange Clamp	10-13

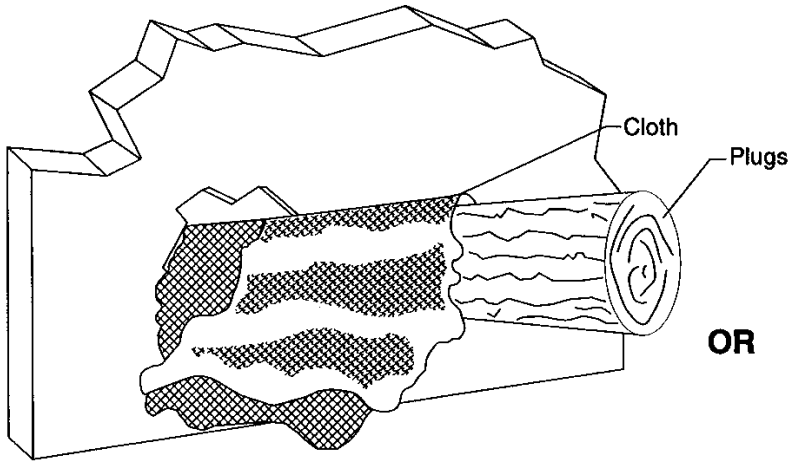

Stop jagged leaks by inserting plug camel wrapped with cloth.

OR

Stop jagged leaks using combinations of conical plugs and wedges.

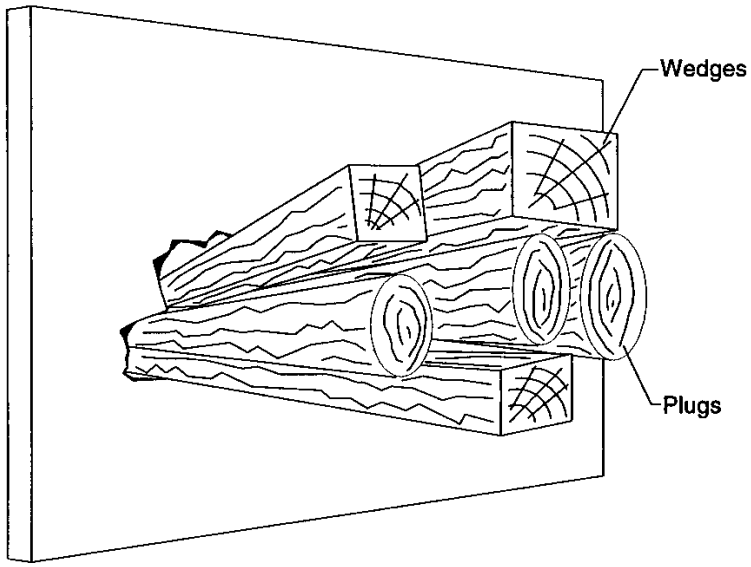

PATCHING/PLUGGING EVOLUTION - SKETCH #001
Use of Wooden Plugs and Wedges in Filling Holes

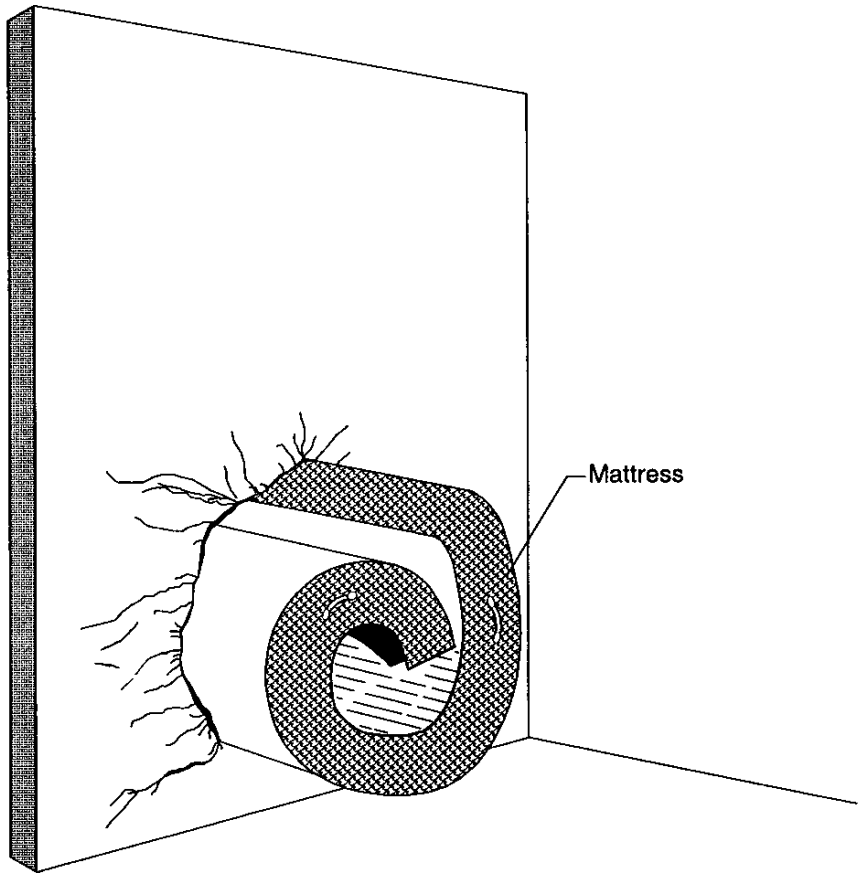

PATCHING/PLUGGING EVOLUTION - SKETCH #002
Plugging with Mattresses

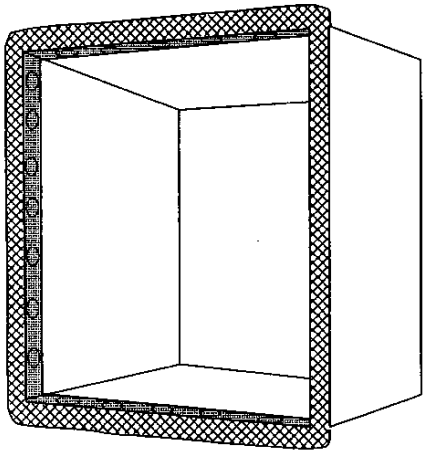

Steel box leak stopper of 1/4" plate with rubber, canvas or oakum gasket around edges.

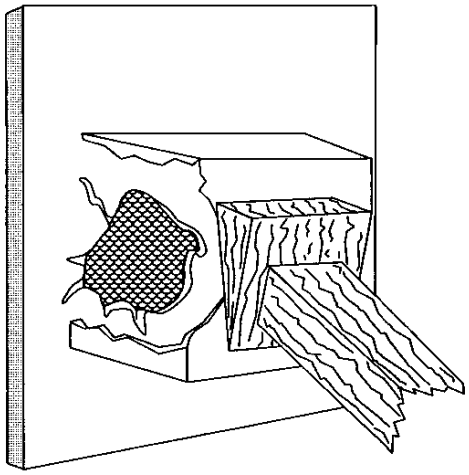

Cut-away section showing box stopper held in place with shoring.

OR

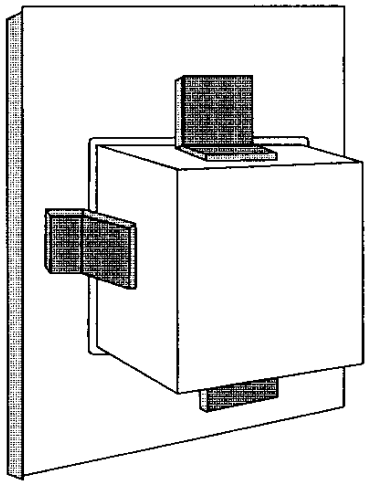

Steel box welded and placed with angle chips.

PATCHING/PLUGGING EVOLUTION - SKETCH #003
Box Patch

1

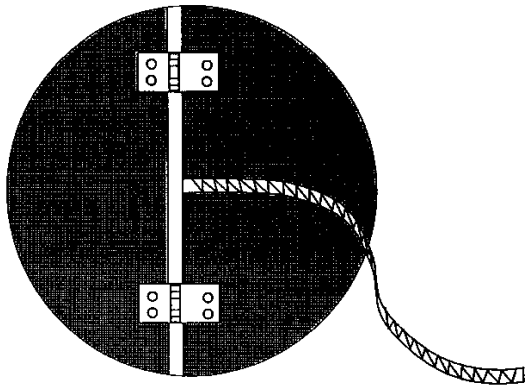

Prefabricated hinged steel plate which can be folded to go through a hole. Use with a pillow or other gasket. Recommended size up to 18" diameter. Use for patching relatively small hole.

2

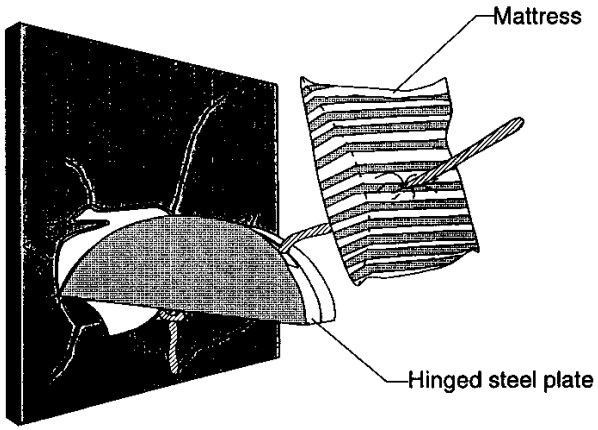

Fit line of plate through a mattress/gasket. Fold plate and push through the hole from inside of ship.

3

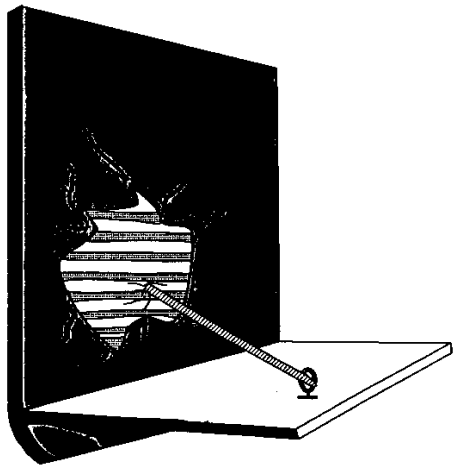

Secure line to the ship.

PATCHING/PLUGGING EVOLUTION - SKETCH #004
Hinged Plate Patch

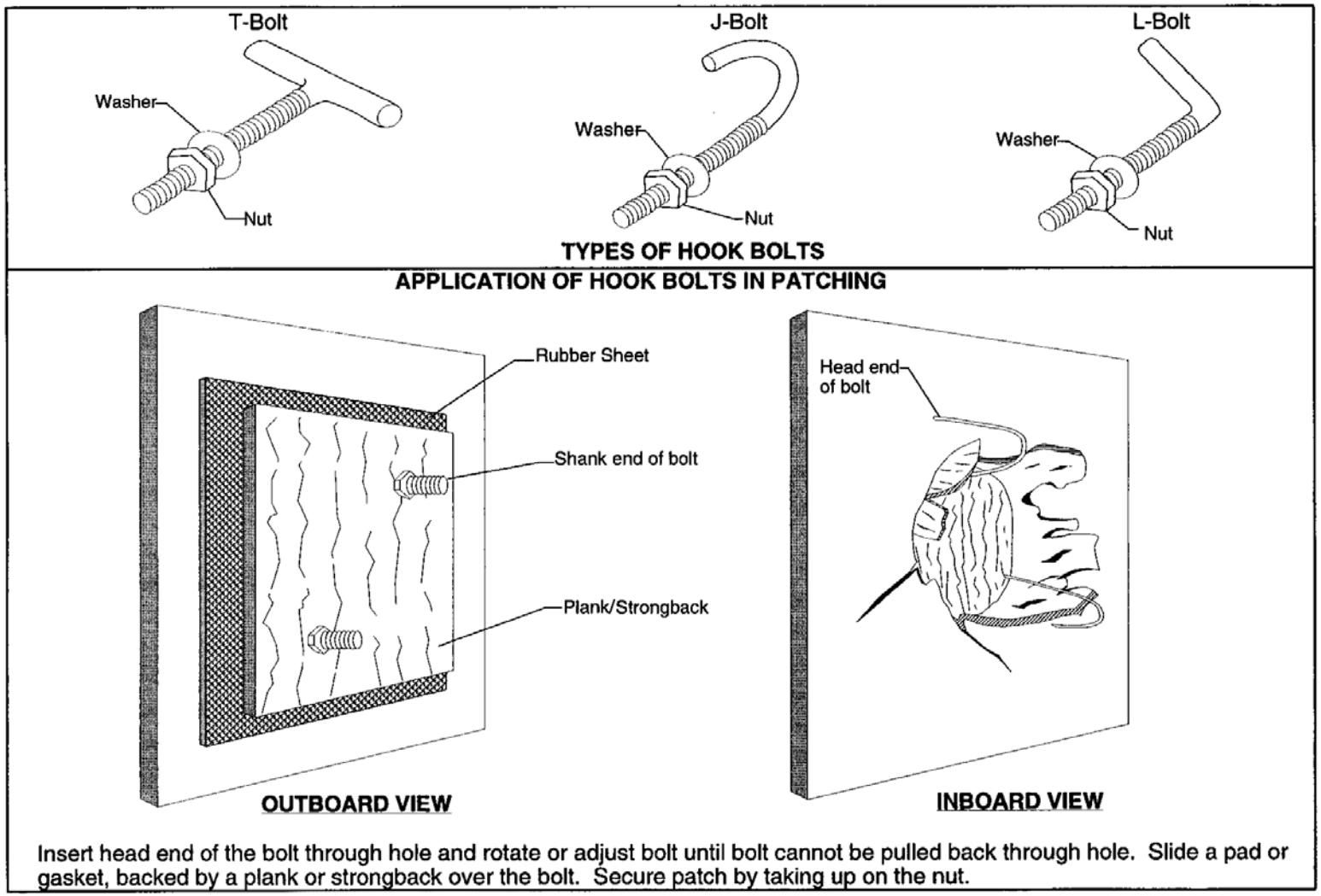

PATCHING/PLUGGING EVOLUTION - SKETCH #005
Securing Patch with Hook Bolts

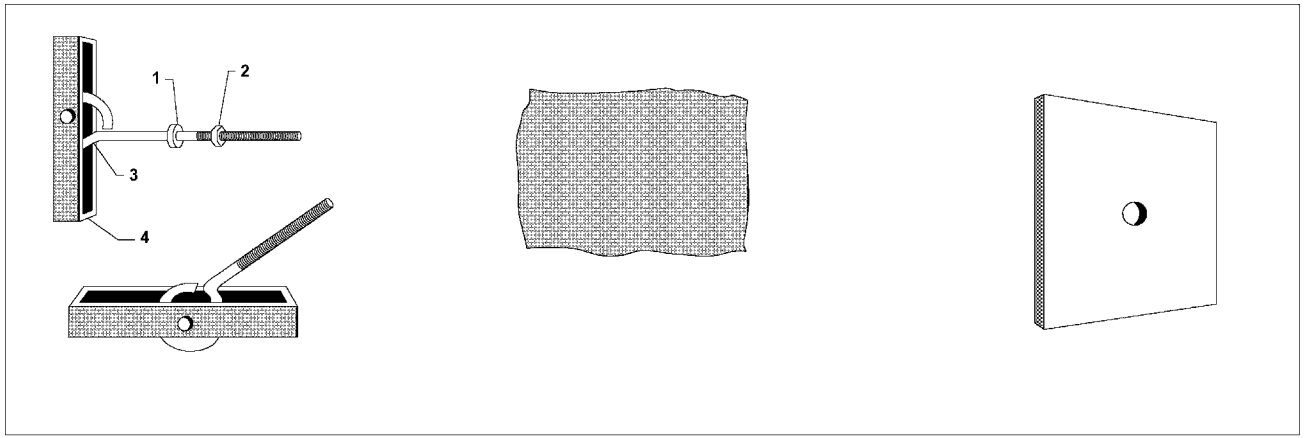

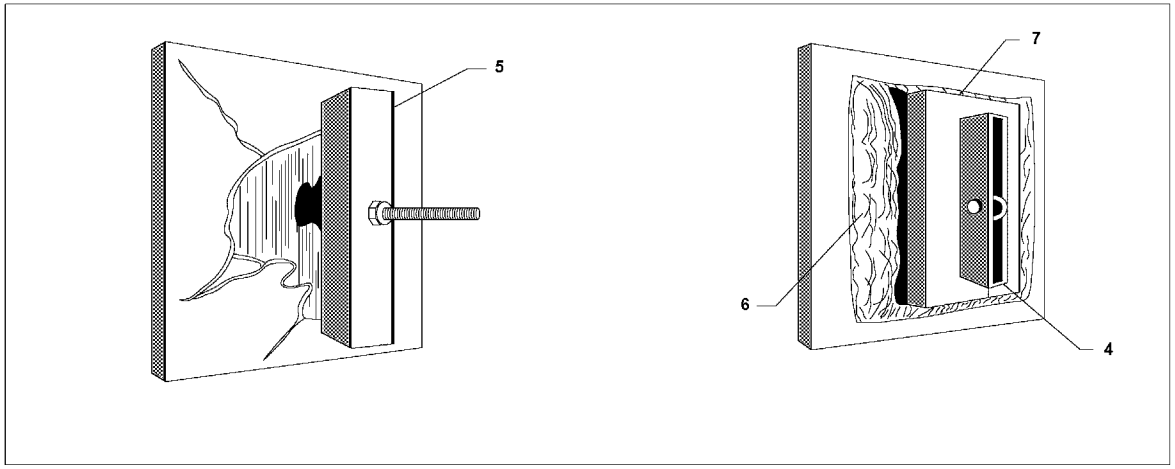

ITEM	qty	EQUIPMENT
1	1	Washer
2	1	Nut
3	1	Hinged Joint
4	1	The T
5	1	4" x 4" Strongback
6	1	Mattress, Blanket or stuffed canvas
7	1	Backing Plate

PATCHING/PLUGGING EVOLUTION - SKETCH #006
Folding T-Patch

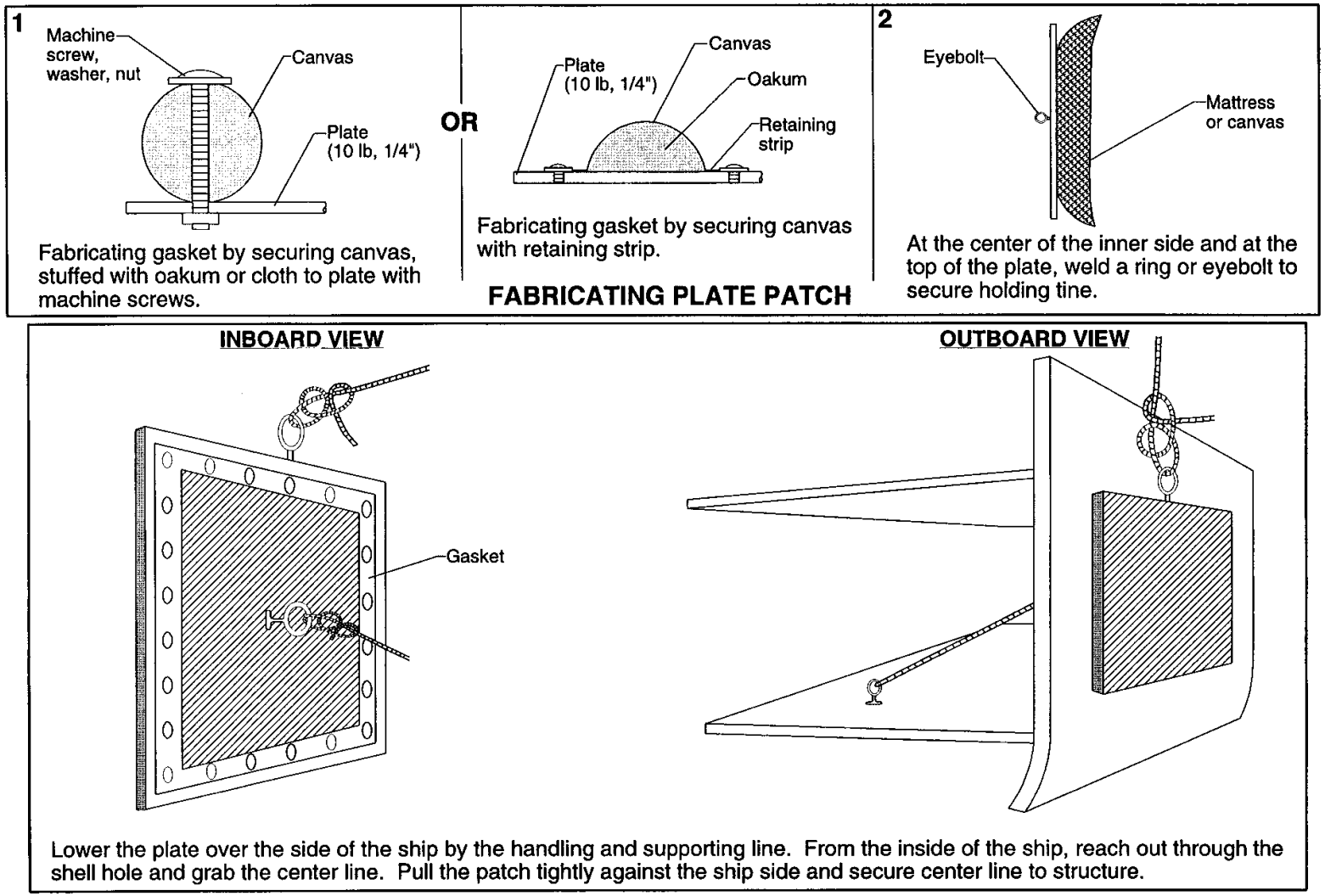

PATCHING/PLUGGING EVOLUTION - SKETCH #007
Plate Patch

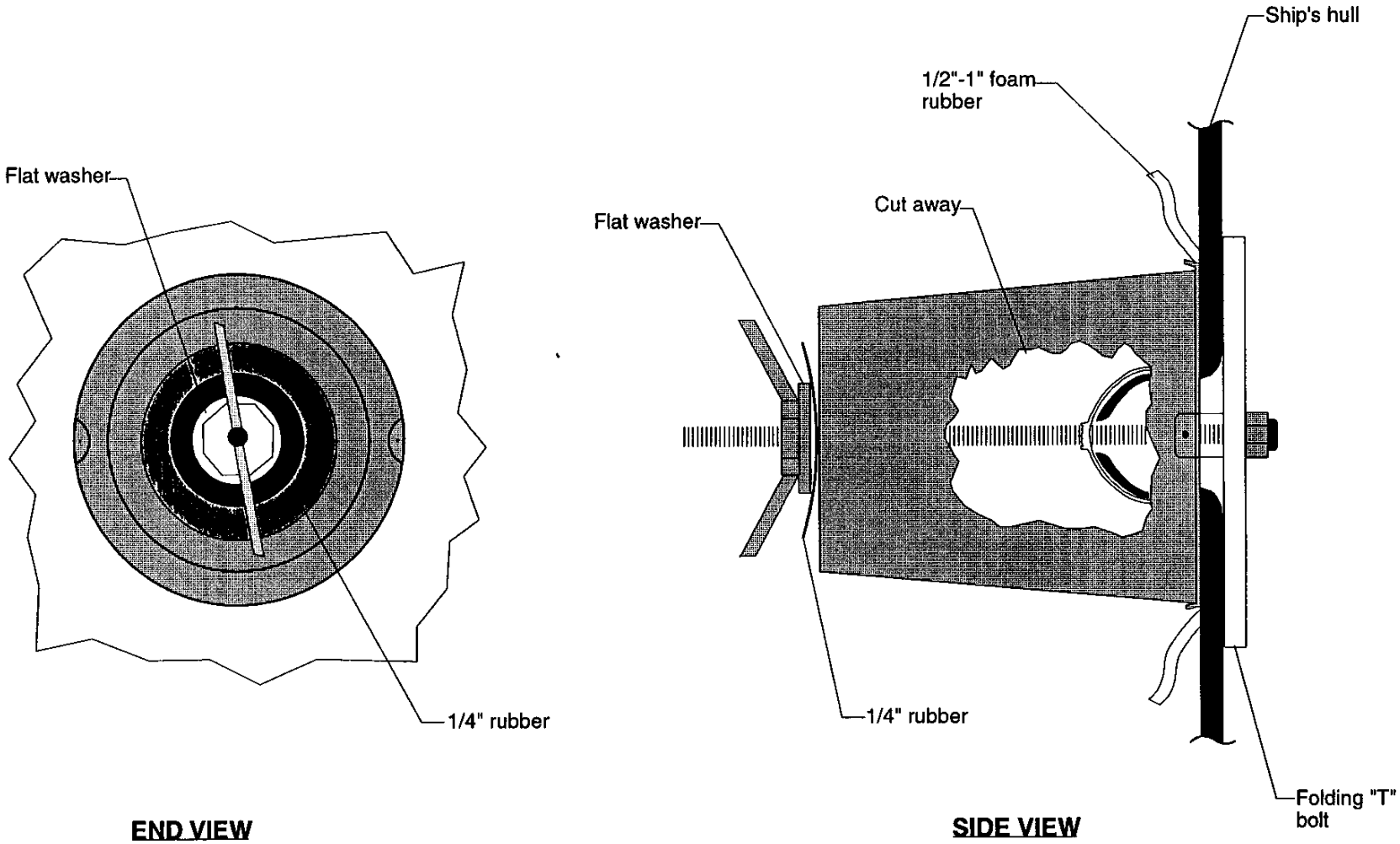

PATCHING/PLUGGING EVOLUTION - SKETCH #008
Bucket Patch

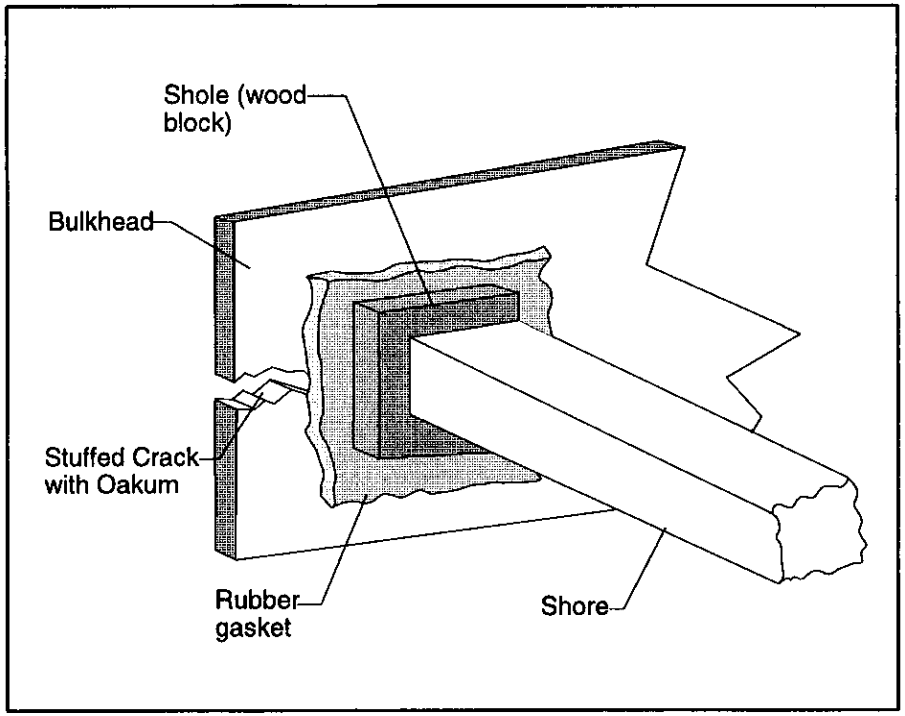

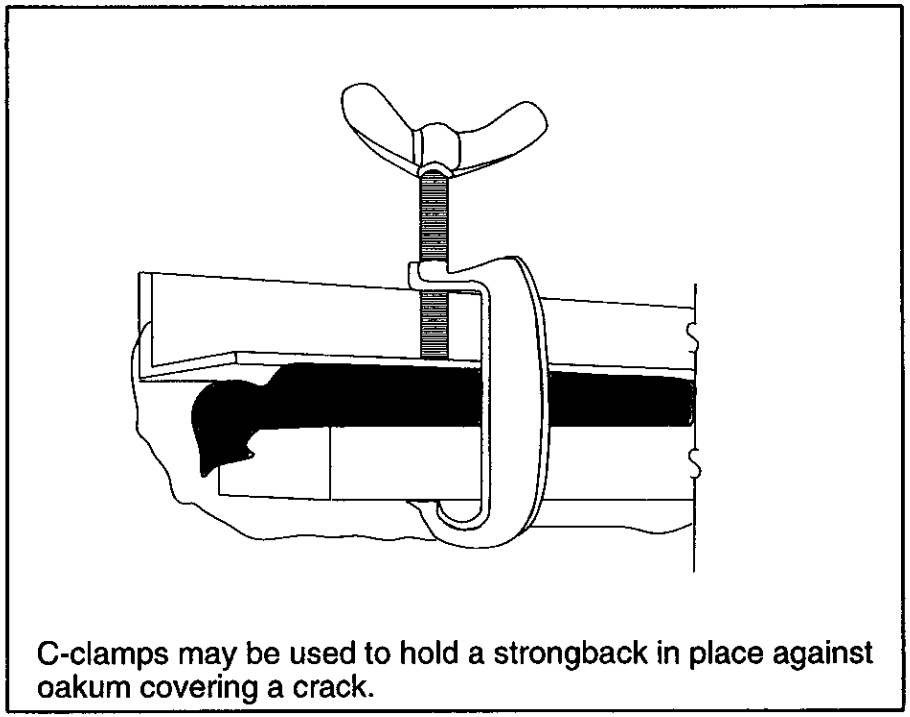

PATCHING/PLUGGING EVOLUTION - SKETCH #009
Patching and Sealing Crack

CAULKING THIN PLATING

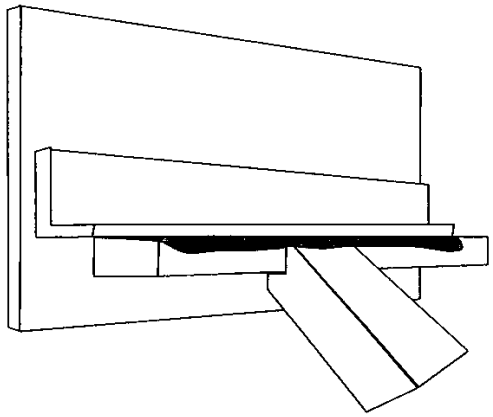

Stop leak under welded frames by bracing oakum or cloth against cracks.

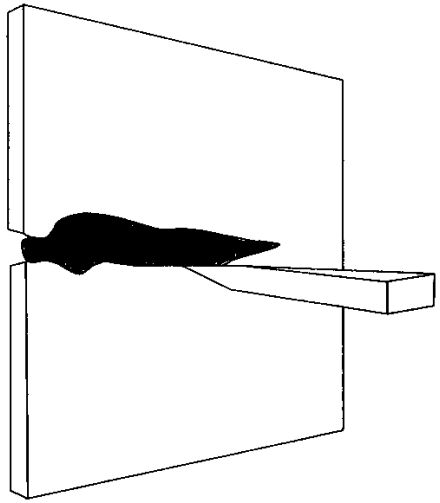

Partially stop leak by driving oakum, marline, or rags into small cracks.

CAULKING TORN SEAMS

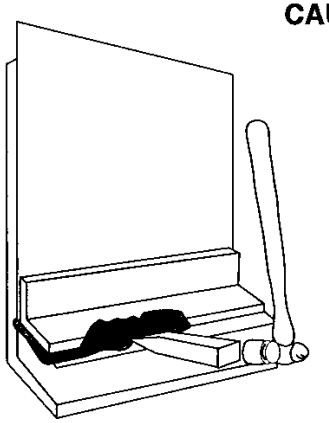

Pack oakum under angle iron to stop leak.

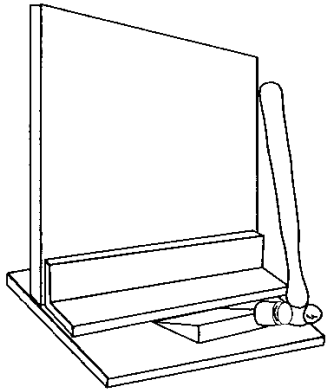

A wedge to be driven home must be of soft wood in order not to open the seam.

PATCHING/PLUGGING EVOLUTION - SKETCH #010
Caulking Thin Plating and Torn Seams

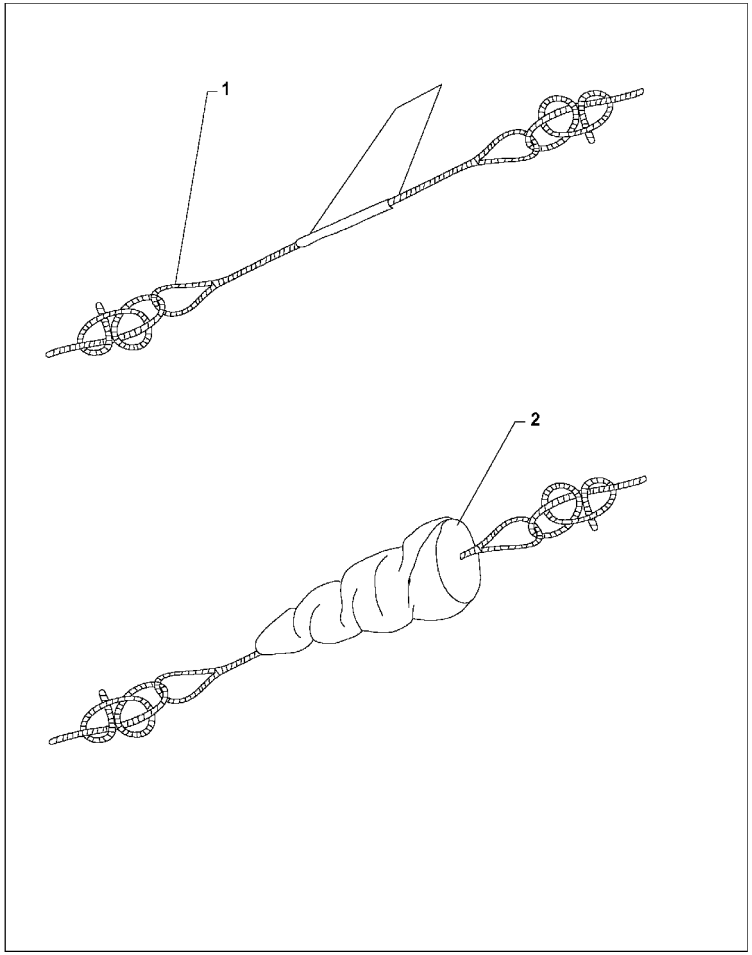

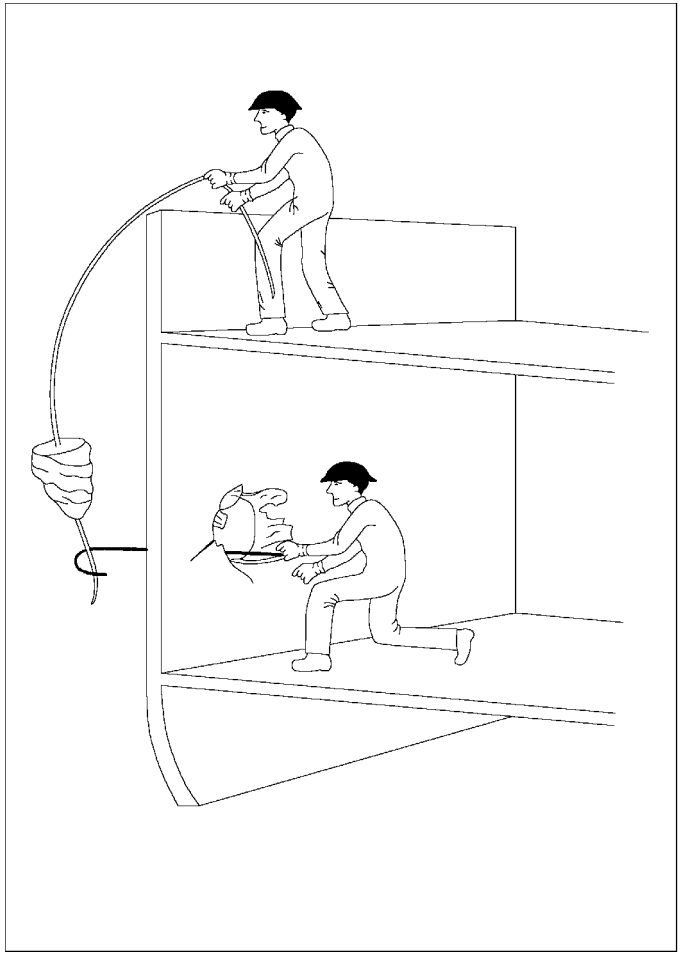

ITEM	qty	EQUIPMENT
1	1	Heavy line with eye at each end
2	1	Cloth/blanket

PATCHING/PLUGGING EVOLUTION - SKETCH #011
Cloth Patch

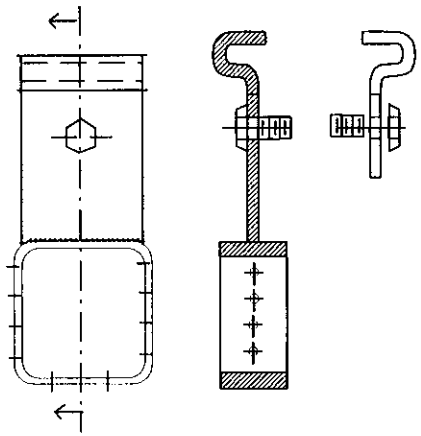

FLANGE CLAMP

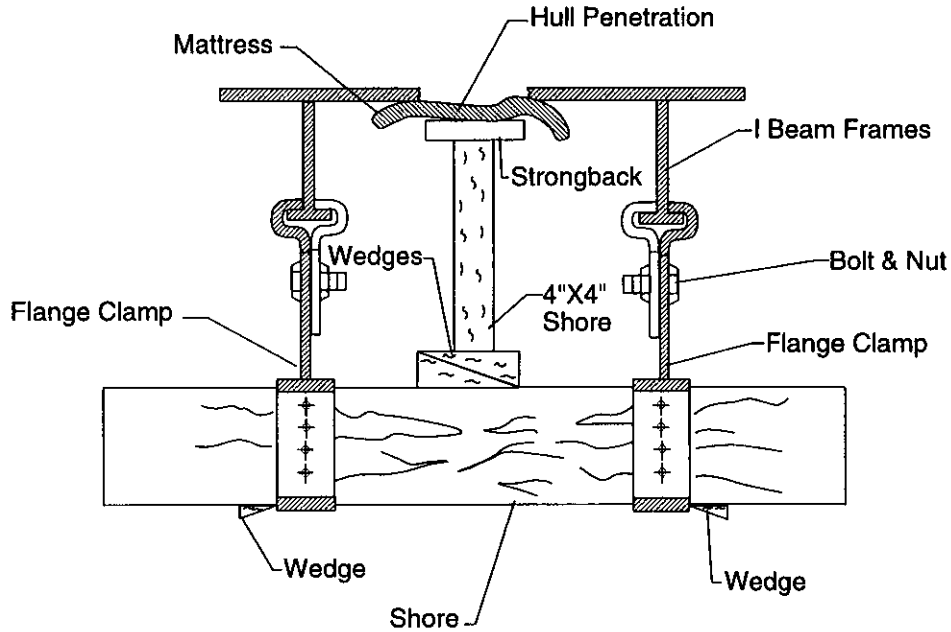

PATCHING/PLUGGING EVOLUTION - SKETCH #012
Emergency Leak Plugging Using Flange Clamp