NAVSEA S5090-B1-MMO-01B

STOWAGE AID BOOKLET

FOR

DAMAGE CONTROL EQUIPMENT

DISTRIBUTION A. APPROVED FOR PUBLIC RELEASE; DISTRIBUTION UNLIMITED.

29 NOVEMBER 1991
CHANGE B 5 SEPTEMBER 2003
NAVSEA S5090-B1-MMO-01B

CHANGE B
SUMMARY OF CHANGES
SECTIONS 2, 3 AND 4

PAGE	NAME	DESCRIPTION OF CHANGE
2-14	List of Material/Equipment for CBR-D IPE and MCU-2P Equipment	New table
2-15	CBR-D IPE Compartment Stowage; View #1 – Overhead View	New sketch
2-16	CBR-D IPE Compartment Stowage; View #2 – 3D View	New sketch
2-17	CBR-D IPE Stowage in Berthing Compartment; View #1 – Overhead View	New sketch
2-18	CBR-D IPE Stowage in Berthing Compartment; View #2 – 3D View	New sketch
2-19	MCU-2P Mass Stowage; View #1 – Overhead View	New sketch
2-20	MCU-2P Mass Stowage; View #2 – 3D View	New sketch
2-21	MCU-2P Stowage in Berthing	New sketch
2-22	MCU-2P Stowage in Decontamination Station; View #1 – Overhead View	New sketch
2-23	MCU-2P Stowage in Decontamination Station; View #2 – 3D View	New sketch
3-31	CBR-D IPE Stowage Rack System	New sketch
3-32	MCU-2P Stowage Plan; Berthing Area	New sketch
3-33	MCU-2P Stowage Plan; Workstation	New sketch

PAGE	NAME	DESCRIPTION OF CHANGE
3-34	MCU-2P Stowage Plan; Bridge Watch Station	New sketch
4-137	CBR-D IPE Stowage Rack; Track System – Vertical Mount (Deck to Overhead)	New sketch
4-138	CBR-D IPE Stowage Rack; Track System – Horizontal Mount (Bulkhead)	New sketch
4-139	CBR-D IPE Stowage Hook	New sketch
4-140	MCU-2P Stowage Rack	New sketch
4-141	MCU-2P Stowage Hook	New sketch

LIST OF EFFECTIVE PAGES

Dates of Original and Changes Pages are:

Original	0	29 November 1991
Change	A	16 November 1992
Change	B	5 September 2003

Insert latest change pages; dispose of superseded pages.

NOTE: On a changed page, the portion of the text affected by the latest change is indicated by a vertical line in the outer margin of the page. Changes to sketches are indicated by miniature pointing hands.

Total number of pages in this publication is 218 consisting of the following:

Page No.	*Change No.
Title	B
Change B Summary of Changes	B
#List of Effective Pages	B
#Record of Changes	0
#Table of Contents	B
#Executive Summary	B
#1-0	0
1-1 through 1-3	B
1-4 through #1-7	0
#2-0 through 2-1	B
2-2 through 2-13	0
2-14 through 2-23	B
#3-0 through 3-1A	B
3-2 through 3-30	0
3-31 through 3-34	B
#4-0	B
4-1	A
4-2	0
4-3	A
4-4	B
4-5 through 4-10	0
4-11	A
4-12 through 4-13	0
4-14	A
4-15 through 4-44	0
4-45	A
4-46	0
4-47	A
4-48 through 4-68	0
4-69	A
4-70 through 4-108	0
4-109	A
4-110 through 4-119	0
4-119A through 4-119B	A
4-120 through 4-126	0
4-127 through 4-128	A
4-129 through 4-136	0
4-137 through 4-141	B
#Recommendation Suggestion Form	0

#Pages are printed single-sided.
*Zero in this column indicates an original page.

STOWAGE AID BOOKLET FOR DAMAGE CONTROL EQUIPMENT

RECORD OF CHANGES

Change No.	Date of Change	Title or Brief Description	Entered By

TABLE OF CONTENTS

SECTION	TITLE	PAGE
	Summary of Changes	i
	List of Effective Pages	iii
	Record of Changes	iv
	Table of Contents	v
	Executive Summary	vi
1.0	Background Information on the New Damage Control Stowage Philosophy	1-0
	Background	1-1
	Concept of Distributive Stowage	1-4
	Functional Areas Composition	1-4
	General Notes	1-6
2.0	Plan Layout Sample Sketches	2-0
	Damage Control Deck	2-2
	Repair Locker/DCRS, Unit Locker, Passage Stowage	2-7
	CBR-D IPE Stowage	2-15
	MCU-2P Stowage	2-19
3.0	Plan Layout Sample Sketches of Damage Control Kits by Function	3-0
	Fire Fighting Dressout	3-2
	Desmoking	3-11
	Dewatering	3-18
	Personnel Protection Equipment Stowage Bag	3-26
	Portable Hydraulic Access and Rescue System (PHARS)	3-27
	CBR-D IPE	3-31
	MCU-2P	3-32
4.0	Sketches of Stowage Devices for Damage Control Equipment	4-0
	Adjustable Shelves, Brackets and Lockers	4-5
	CBR-D IPE Stowage Racks and Hooks	4-137
	MCU-2P Stowage Racks and Hooks	4-140

EXECUTIVE SUMMARY

Naval Sea Systems Command (NAVSEA) prepared this Stowage Aid Booklet for Damage Control (DC) equipment in response to an action item from the Chief of Naval Operations Damage Control/Fire Fighting/CBR Working Group. This document aids shipboard personnel in identifying possible layouts and stowage devices and provides a reference for information on DC equipment and Chemical, Biological and Radiological-Defense (CBR-D) Individual Protection Equipment (IPE) stowage. This stowage aid booklet also provides a valuable reference document for:

1. Ship Design Managers and Ship Builders - To illustrate alternatives for stowage of DC and CBR-D IPE equipment.

2. Ship Builders - To assist in the design and layout of new ships with examples of DC and CBR-D IPE stowage for equipment.

3. Various NAVSEA Technical Codes - To provide a reference tool as guidance on DC and CBR-D IPE equipment stowage alternatives.

4. Training Commands - To train personnel to effectively stow DC and CBR-D IPE equipment.

5. SIMA and Tender Activities - To provide a reference tool for work packages involving DC and CBR-D IPE equipment stowage.

The information in this booklet is presented in four sections:

1. Section 1 provides background information of DC and CBR-D IPE equipment stowage philosophy and the interrelationship within the supply system, i.e., Allowance Equipage List (AEL) and National Stock Number (NSN).

2. Section 2 describes deck plan layouts of DC Repair Stations, including the Unit Locker and Passages, Decontamination Stations and compartment stowage options for CBR-D IPE.

3. Section 3 illustrates acceptable passageway stowage of DC equipment, organized by functions such as fire fighting, dewatering and desmoking, and stowage options for CBR-D IPE.

4. Section 4 provides examples of stowage devices, brackets, racks, hooks and lockers that are currently used fleetwide for DC and CBR-D IPE equipment.

This booklet will be updated via change pages as new stowage devices are developed and to reflect new equipment and equipment improvements. Recommendations are welcome and encouraged and will be presented annually to the Damage Control/Fire Fighting/CBR Working Group.

Section 1

**BACKGROUND INFORMATION
ON THE NEW DAMAGE CONTROL
STOWAGE PHILOSOPHY**

BACKGROUND

This Stowage Aid Booklet provides recommended Damage Control (DC) equipment and Chemical, Biological and Radiological-Defense (CBR-D) Individual Protection Equipment (IPE) stowage information and includes options that should be considered for particular ship configurations.

Shipboard fires, smoke, flooding and CBR agents can threaten crew safety and the ultimate survival of the ship. Damage control tactics, training, equipment and stowage are the tools used to combat these threats to a ship's ability to fight.

Distribution of equipment is an important element of damage control to improve reaction time, reduce injury to personnel and increase survivability of the ship.

Lessons learned from past casualties and DC scenarios have led to improvements and additions to repair party equipment. However, proper distribution and stowage of DC equipment has not received the attention it deserves.

Today, there is a renewed emphasis on how and where to stow DC equipment to improve the response time of repair teams and thus reduce loss of life and ship damage. Shipboard casualties on USS STARK (FFG 31), USS SAMUEL B. ROBERTS (FFG 58), USS PRINCETON (CG 59), USS TRIPOLI (LPH 10) and USS COLE (DDG 67) have proven that when the command disperses equipment and personnel within a repair station's area of responsibility, improved reaction time and survivability are achieved.

Elements of the DC equipment stowage philosophy are as follows:

1. The DC deck is designed to be the primary staging area for DC repair parties. The damage control organization disperses equipment within the repair station's area or zone of responsibility according to the equipment's function, i.e., fire fighting, desmoking and dewatering. Functionally grouped and stowed equipment provides immediate access so that repair teams can respond quickly and positively to a casualty.

2. Equipment currently crammed inside the repair locker, such as fire extinguishers, casualty power cables, general quarters gear, oxygen breathing apparatus, portable fans and canisters, should be relocated to the passageways in a functionally organized and logical manner.

3. Large DC equipment should be located in the passageway with its functional group near power and exhaust sources.

4. Teams and equipment are dispersed port and starboard, fore and aft and above and below deck (Refer to section 2, sketch 001). This allows flexibility, survivability and improved response by repair party personnel to combat the casualties as soon as they are reported.

5. Adjustable shelving in repair station stowage bins will increase space for new equipment.

6. Use "dead areas" of the ship for stowage shelving and brackets. Examples include areas behind doors and hatches, storerooms, voids and bulkheads in berthing areas.

7. Use stowage devices that are flexible enough to accommodate equipment improvements and changes.

Implementation of the concepts within this booklet will:

1. Decrease the possibility of a single weapon hit destroying an entire repair party organization.

2. Minimize the amount of initial confusion since equipment is already strategically dispersed.

3. Eliminate the bottleneck of personnel at the repair locker compartment entrance when General Quarters is sounded.

4. Improve the equipment setup and response times of repair party teams combating casualties.

5. Limit the extent of damage to a ship.

Damage control in the Navy is exceptional. With personnel and material at risk, we must continuously seek improvement and eliminate all potential hazards. Our training is outstanding and our equipment is first rate. The stowage features presented herein will distribute DC and CBR-D IPE equipment most effectively throughout the ship, thus allowing repair party personnel to respond more quickly to casualties.

Additional resources for information on DC/fire fighting/CBR-D IPE equipment include the following:

1. NWP 3-20.31, Surface Ship Survivability

2. NSTM Chapter 074, Volume 3, Gas Free Engineering

3. NSTM Chapter 079, Volume 2, Practical Damage Control

4. NSTM Chapter 555, Volume 1, Surface Ship Fire Fighting

5. NSTM Chapter 555, Volume 2, Submarine Fire Fighting

6. NSTM 077, Personnel Protection Equipment

7. Training Aid Booklet for Damage Control Equipment

8. Safety and Survivability Video, "The Value of Proper Damage Control Equipment Stowage”

9. Damage Control Allowance Equipage Lists (AEL), 2-880044200 through 2-880044299 series.

NAVSEA's approach to achieving the goal of effectively stowing DC equipment and CBR-D IPE encompasses the following steps:

1. DC AELs have been reorganized by the number of repair stations (the "Parent AELs") and then subdivided into kits ("Kit AELs"), which are organized by equipment function.

2. NWP 3-20.31, Surface Ship Survivability, invoked the requirement for distributive stowage of DC kits throughout repair stations, resulting in the stowage of equipment by function in passageways or other suitable locations within a repair station's zone of responsibility.

3. The Navy has published the "Training Aid Booklet for Damage Control Equipment." This publication describes equipment in the DC inventory with illustrations, stock numbers and uses.

4. Photoluminescent marking has been successfully used to identify equipment and egress routes during DC and fire fighting operations.

The Navy is continually striving to improve DC capabilities through conferences, such as the Surface Warfare Commanders Maintenance Conferences, and the Chief of Naval Operations Damage Control/Fire Fighting/CBR Working Group.

Improvements are not limited to better equipment. One example is the development of a software package, Damage Control Action Management Software (DCAMS). This was developed primarily to provide shipboard DC personnel with an automated means of tracking the location and status of portable and consumable DC equipment. A secondary purpose is to allow shipboard and shore-based personnel to evaluate proposed changes in stowage locations for DC equipment and to ensure rapid and effective reaction to emergency conditions.

The Surface Warfare Officers School Damage Control Training Department completed a mockup of a DC repair station and passageways. The mockup illustrates distributive stowage to new damage control assistants, chief engineers and prospective commanding officers.

The display ship ex-USS BARRY (DD 933) at the Washington Navy Yard has a DC repair station mockup that design teams of new ship construction can study. The Navy tests and fine-tunes tactics for effective use of new DC equipment onboard ex-USS SHADWELL (LSD 15) in Mobile, Alabama.

CONCEPT OF DISTRIBUTIVE STOWAGE

1. Improve Repair Party Response Time

   a. Disburse priority equipment from within the repair locker into surrounding area to prevent bottlenecks and confusion.
   b. Disburse the following functional areas:
      (1) Fire Fighting Dressout
      (2) Dewatering
      (3) Desmoking
      (4) Fire Fighting Extinguishers
      (5) Shoring
      (6) Casualty Power
      (7) General Quarters Gear

2. Increase Survivability

   Disbursal of equipment diminishes consequences from loss of repair locker to damage.

FUNCTIONAL AREAS COMPOSITION

1. Fire Fighting Dressout

   a. Fire Fighting Ensemble (six per station)
      (1) Fire Fighter's Coveralls
      (2) Fire Fighter's Boots
      (3) Fire Fighter's Gloves
      (4) Flash Gear
      (5) MK II Helmets
      (6) Fire Fighter's helmet lights
   b. OBAs (6 Min)
   c. OBA Canisters (36 Min)

2. Dewatering

   a. P-250 Pump
   b. Two or more Submersible Pumps
   c. Peri-Jet and S-Type Eductors
   d. Associated Fire, Suction, and Exhaust Hoses

3. Desmoking

   a. Two Red Devil Blowers and/or Water-driven Blowers
   b. Two 8-in Expandable Vent Ducts and/or 10-in Expandable Vent Ducts
   c. One Tube Axial Fan
   d. Three Smoke Curtains
   e. Two OBAs (Min)
   f. Twelve OBA Canisters (Min)

4. Fire Fighting Extinguishers

    a. Two $C0_2$ Extinguishers
    b. One PKP Extinguisher

5. Shoring

    a. Steel Shoring
    b. Wooden Shoring
    c. Wedges
    d. Patches, Box

6. Casualty Power

    Cables and Racks

7. General Quarters Gear (Repair Party Personnel)

    a. Gas Mask
    b. Life Jacket with Antiflash Hood and Gloves

STOWAGE AID BOOKLET FOR DAMAGE CONTROL EQUIPMENT

GENERAL NOTES

1. All dimensions are in inches unless otherwise noted.

2. All stowage installations shall be as level as possible and parallel to the baseline of the ship unless noted otherwise.

3. All sharp or ragged edges shall be ground or sanded smooth to prevent damage to equipment and injury to personnel.

4. Each installation is unique. Detailed drawings shall be drawn and equipment templates developed and checked for fit on paper prior to fabrication of stowage equipment or modification of spaces.

5. For painting and deck covering, see ships painting schedule.

6. Material lists are provided as necessary.

7. Stowage arrangement dimensions may vary according to the geometry of spaces available.

Section 2

PLAN LAYOUT SAMPLE SKETCHES

- **Damage Control Deck**
- **Repair Locker/DCRS**
- **Unit Locker**
- **Passage Stowage**
- **CBR-D IPE Stowage**
- **MCU-2P Stowage**

DAMAGE CONTROL EQUIPMENT STOWAGE SKETCHES

SECTION 2 SKETCH NO.	TITLE OF SKETCH
001	Typical Damage Control Repair Station (DC Deck Layout)
002	Typical Damage Control Repair Station (Plan View) Version 1
002	Typical Damage Control Repair Station (Plan View) Version 2
002	Typical Damage Control Repair Station (Plan View) Version 3
002	Typical Damage Control Repair Station (Plan View) Version 4
002	Typical Damage Control Repair Station (Plan View) Version 5
003	Typical Damage Control Unit Locker
004	Typical DCRS Passage Stowage
005	CBR-D IPE Compartment Stowage View #1 – Overhead View
006	CBR-D IPE Compartment Stowage View #2 – 3D View
007	CBR-D IPE Stowage in Berthing Compartment View #1 – Overhead View
008	CBR-D IPE Stowage in Berthing Compartment View #2 – 3D View
009	MCU-2P Mass Stowage View #1 – Overhead View
010	MCU-2P Mass Stowage View #2 – 3D View
011	MCU-2P Stowage in Berthing
012	MCU-2P Stowage in Decontamination Station View #1 – Overhead View
013	MCU-2P Stowage in Decontamination Station View #2 – 3D View

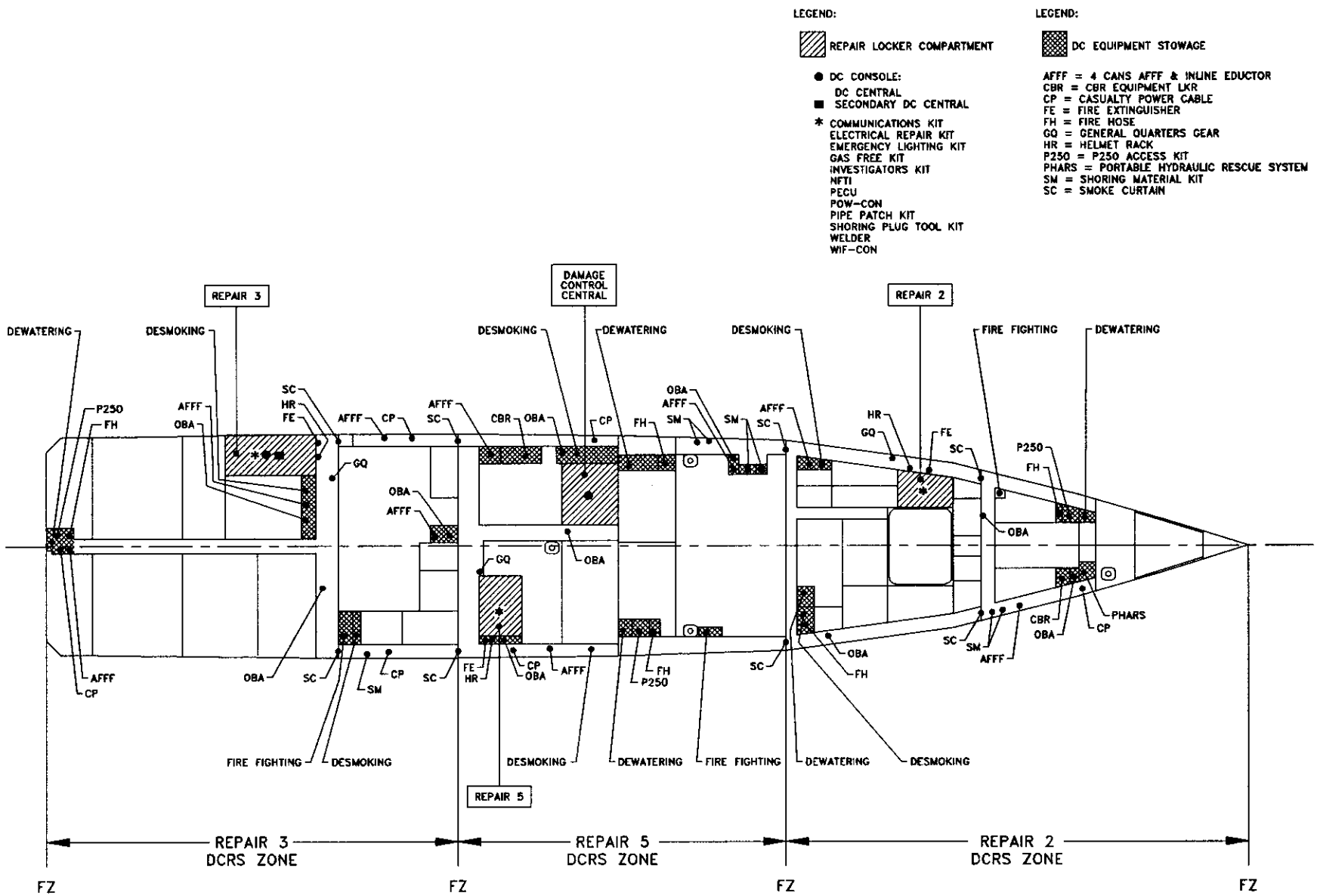

DAMAGE CONTROL EQUIPMENT STOWAGE SKETCH # 001

TYPICAL DAMAGE CONTROL REPAIR STATION (DC DECK LAYOUT)

DCESSAAA

TYPICAL THREE (3) DAMAGE CONTROL REPAIR STATION (DCRS) SHIP CONFIGURATION

LIST OF MATERIAL / EQUIPMENT				
Location No.	**Typical No. Req'd** Per Space	**Description**	**Dwg or Spec No.**	**Remarks**
1	4	Type "A" Bin	804-4563098	Size: (36"W x 54"H x 24"D) Repair 2, 3 & 5 and DCEL
2	3	Type "B" Bin	804-4563098	Size: (24"W x 60"H x 24"D) Repair 2, 3 & 5 and DCEL
3	1	Bins		Repair 2, 3 & 5 and DCEL
4	4	Cabinet, Housing with Bins Over		Repair 2, 3 & 5 and DCEL
5	1	Gas Free Equipment Locker	DC Stowage Sketch Sec. 4 Version 1, #047 Version 2, #048	Repair 2, 3 & 5 only Passage
6	1	General Quarters Gear	DC Stowage Sketch Sec. 4 - #049, #050, #051	DC Sketch No. 050 Holds 20 Sets each, Life Jackets, Gas Mask, Anti Flash Gear in Passage (DC Sketch No. 049, 051 Holds 8 Sets)
7	4	OBA Rack	DC Stowage Sketch Sec. 4 - #070, #071	1 OBA, Anti Flash Gear, FF Helmet Passageway, 2 only inside DCEL
8	3	OBA Canister Stowage Rack	DC Stowage Sketch Sec. 4 - #067, #068	3 Permanent, 36 Canisters, Passage
9	1	Portable Hydraulic Rescue System (PHARS)	DC Stowage Sketch. Sec. 4 - #079 (Stowage Brackets)	DC Sketch No (3-26, 3-27-3-28-3 29) 1 Per ship
10	2	OBA Canister Stowage Rack	DC Stowage Sketch Sec. 4 - #067, #068	2 Portable, 6 Canisters, Passage
11	1	Locker, OBA, FFBA, PPE Stowage	DC Stowage Sketch Sec. 4 - #077 Version 2	(Personnel Protection) 6 OBAs Repair 2, 3 & 5 only
12	1	Locker, OBA, FFBA, PPE Stowage	DC Stowage Sketch Sec. 4 - #078 Version 2	(Personnel Protection) 4 OBAs, 2 cases of canisters (Reserve) Repair 2, 3 & 5 only

LIST OF MATERIAL / EQUIPMENT				
Location No.	**Typical No. Req'd** Per Space	**Description**	**Dwg or Spec No.**	**Remarks**
13	1	DC WIF-COM		Repair 2, 3 & 5 only (under table #15)
14	6	OBA Stowage Locker, Single Unit	DC Stowage Sketch Sec. 4 - #069	Repair 2, DCC 3 & 5 only Passage
15	1	Table, Damage Control	805-0921930	Repair 2, 3 & 5 only
16	1			Repair 2, 3 & 5 only
17	1	Locker, Tall	MIL-F-243	18"W x 12"D x 7'-2"H and DCEL Repair 2, 3 & 5 only
18	2	Rack, Fire Fighters' Helmet Stowage	DC Stowage Sketch Sec. 4 - #042, #043, #044	Repair 2, 3 & 5 only, 1 inside DCEL
19	1	Clock, 24 Hour	MIL-C-1 194	Repair 2, 3 & 5 only
20	1	Clinometer, Heel	MIL-C-20061	Repair 2 only or Secondary DCC
21	1	Clinometer, Trim	MIL-C-2261	Repair 2 only or Secondary DCC
22	1	Ladder, Scaling	DC Stowage Sketch Sec. 4 - #062, #063	Repair 2, 3 & 5 and DCEL
23	2	Lantern, Hand, w/Relay		Repair 2, 3 & 5 only Damage Control Eqpt Locker lone lantern only)
24	1	Dewatering Kit	DC Stowage Sketch Sec. 4 - #021 through #026	Repair 2, 3 & 5 only, Divided in Passage Port/STBD DC Sketch Nos. 3-17 through 3-24
25	1	Firemain Pressure Gage		Repair 2, 3 & 5 only
26	1	Desmoking Kit	DC Stowage Sketch Sec. 4 - #027 through #034	Repair 2, 3 & 5 only, Divided in Passage Port/STBD DC Sketch Nos. 3-11 through 3-16
27	3	Fire Hose Stowage	DC Stowage Sketch Sec. 4 - #046, #053 through #061	Repair 2, 3 & 5 and DCEL
28	1	CBR Equipment Locker	DC Stowage Sketch Sec. 4 - #007	Repair 2, 3 & 5 only Passage
29	1	Radiac Equipment		Repair 2, 3 & 5 only
30	1	Hydraulic Jack		Repair 2, 3 & 5 only

LIST OF MATERIAL / EQUIPMENT				
Location No.	Typical No. Req'd Per Space	Description	Dwg or Spec No.	Remarks
31	2	Emergency Comms Reels		Repair 2, 3 & 5 and DCEL
33	3	Smoke Curtains	DC Stowage Sketch Sec. 4 - #090, #091, #092	Repair 2, 3 & 5 and DCEL Passage. Pre-hung above W.T. door or on each side
108	2	Investigator/Tender Kit		Repair 2, 3 & 5 only
109	1	Navy Fire Fighters Terminal Hanger (NFTI)	DC Stowage Sketch Sec. 4 - #065	Repair 2, 3 & 5 and DCEL
150	1	Extinguisher, Fire, Chemical	MIL-E-24091	Passageway except DCEL
158	6	Fire Fighters' Ensemble	DC Stowage Sketch Sec. 4 - #039, #040, #041	6 sets stowed in passage except 4 in DCEL, DC Sketch Nos. 3-39 through 3-41
159	24	Fire Retardant Coveralls		24 sets stowed inside DCRS, 12 in DCEL
160	18	Fire Fighters' Boots	DC Stowage Sketch Sec. 4 - #034, #035, #036 Rack	Repair 2, 3 & 5, 16 in DCEL)
195	2	Extinguisher, Fire, Carbon Dioxide	MIL-E-24269	Repair 2, 3 & 5 Passage, inside DC Equipment Locker
227	1	Pipe Patching Kit		Repair 2, 3 & 5 and DCEL
228	1	Plugging Kit		Repair 2, 3 & 5 and DCEL
251	1	Cable, Assy, Casualty Power	DC Stowage Sketch Sec. 4 - #008	Repair 2, 3 & 5 only in Passage
302	2	Strainer, Suction, Firehose		Repair 2, 3 & 5 Passage, inside DCEL
327	2	Pump, Centrifugal, Submersible Portable	MIL-D-17454 DC Stowage Sketch Sec. 4 - #081	Repair 2, 3 & 5 Passage, inside DCEL
332	3	Rope, Nylon DBL BRD/	MIL-R-17343	Repair 2, 3 & 5 only (2" x 50' Length)
359	1	Welding Machine, Stowage Rack	DC Stowage Sketch Sec. 4 - #097	Repair 2 & 3 only
360	1	Port Exothermic Cutting Unit (PECU)	DC Stowage Sketch Sec. 4 - #074, #075	Repair 2, 3 & 5 only Rod Stowage/Rack Foundation
384	1	Chain Hoist		Repair 2, 3 & 5 only

LIST OF MATERIAL / EQUIPMENT				
Location No.	**Typical No. Req'd** Per Space	**Description**	**Dwg or Spec No.**	**Remarks**
385	1	Block and Fall Assy		Repair 2, 3 & 5 only
435	1	Shoring & Plugging Tool Kit		Repair 2, 3 & 5 and DCEL
436	1	Shoring Rack, Wood	DC Stowage Sketch Sec. 4 - #088, #089 Horizontal	Repair 2, 3 & 5 only, Passageway
437	1	Shoring Rack, Metal	DC Stowage Sketch Sec. 4 - #083 through #087	Repair 2, 3 & 5 only Vertical/Horizontal Stowage Racks
600	1	Control Console		Repair 2 only or Secondary DCC

DC STOWAGE SKETCH SEC. # - #000: DAMAGE CONTROL EQUIPMENT STOWAGE SKETCH #000

DCRS: DAMAGE CONTROL REPAIR STATION

DCEL: DAMAGE CONTROL EQUIPMENT LOCKER

NOTES:

1. The sketches in Section 2, illustrate options for distributive stowage within DCRS and the DCRS (Locker) and zone of responsibility (passages).
2. The Damage Control Equipment Locker (DCEL) topside reentry is also illustrated.
3. Shock requirements must be complied with.
4. The sketches (plan layouts) are intended as general guidance to provide options for defining distributive stowage.

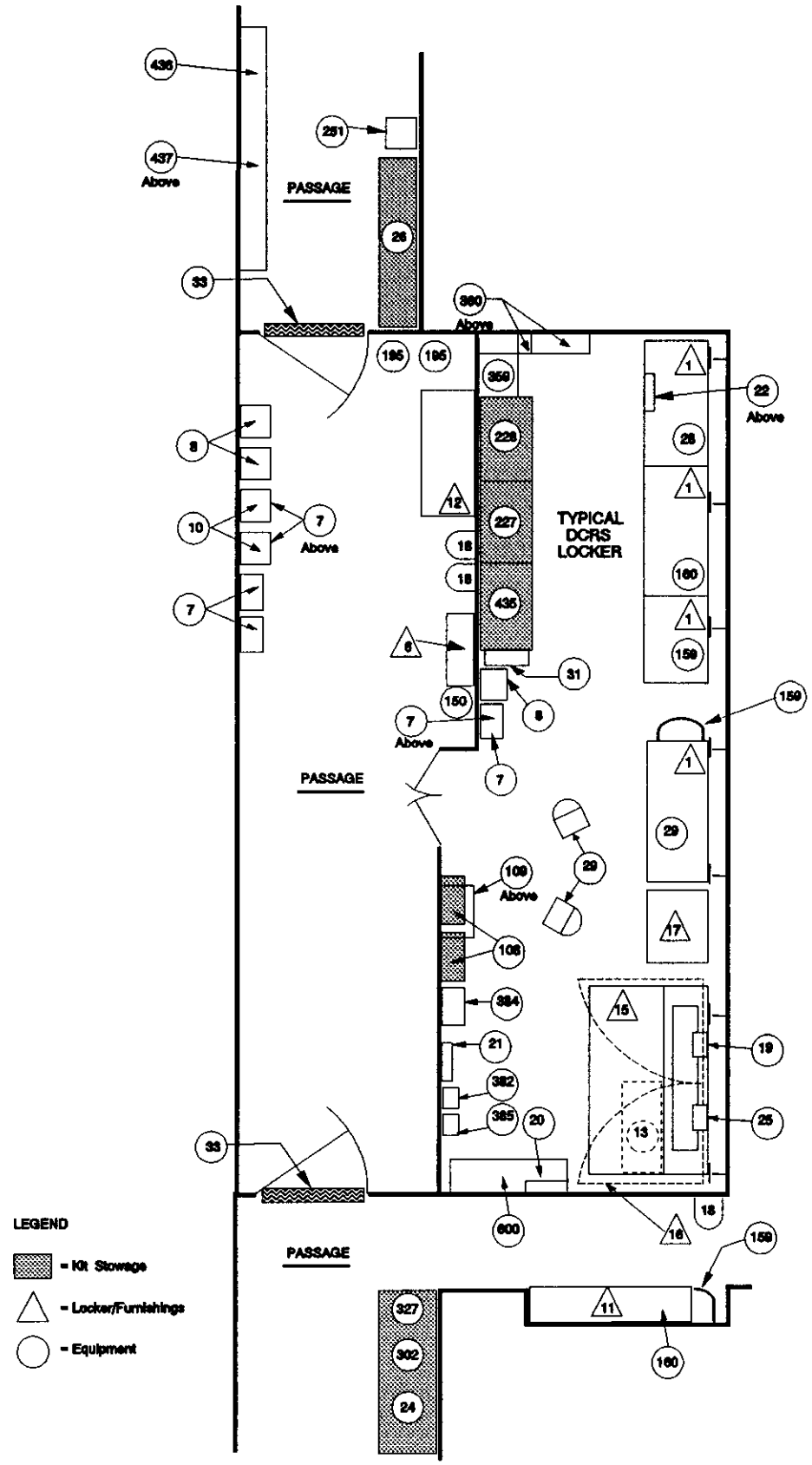

DAMAGE CONTROL EQUIPMENT STOWAGE SKETCH #002

TYPICAL DAMAGE CONTROL REPAIR STATION (PLAN VIEW)

Version 1

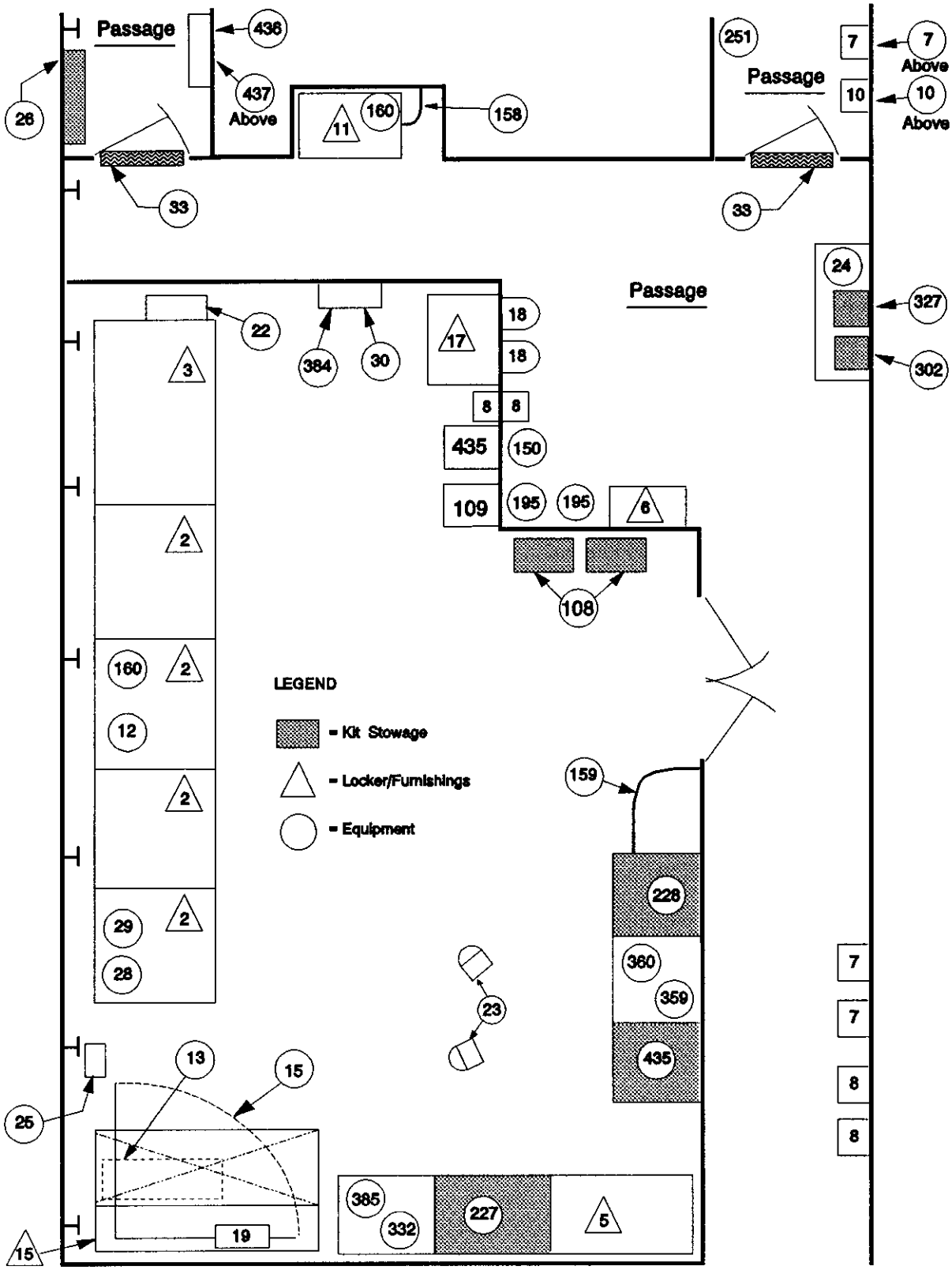

DAMAGE CONTROL EQUIPMENT STOWAGE SKETCH #002

TYPICAL DAMAGE CONTROL REPAIR STATION (PLAN VIEW)

Version 2

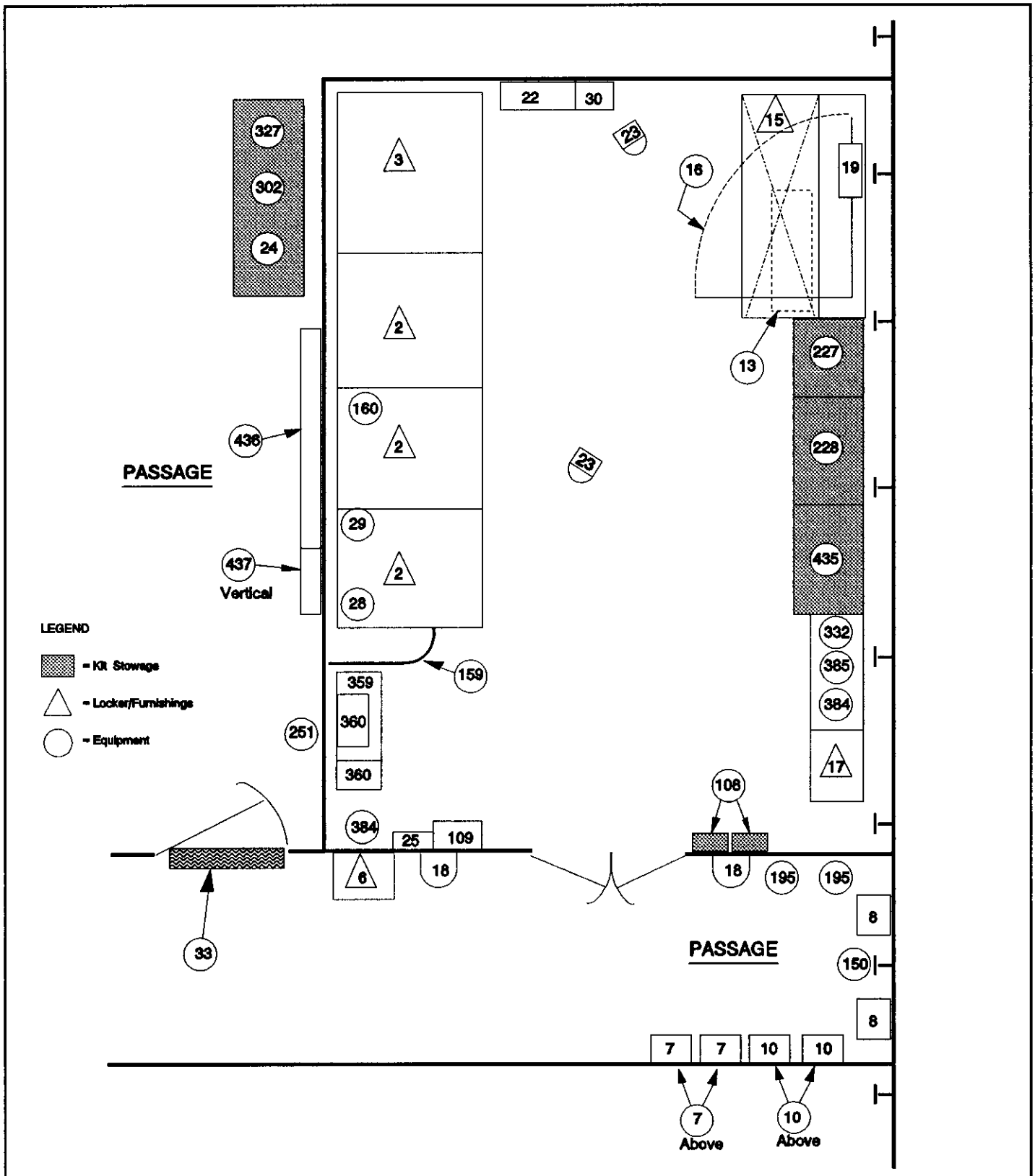

DAMAGE CONTROL EQUIPMENT STOWAGE SKETCH #002

TYPICAL DAMAGE CONTROL REPAIR STATION (PLAN VIEW)

Version 3

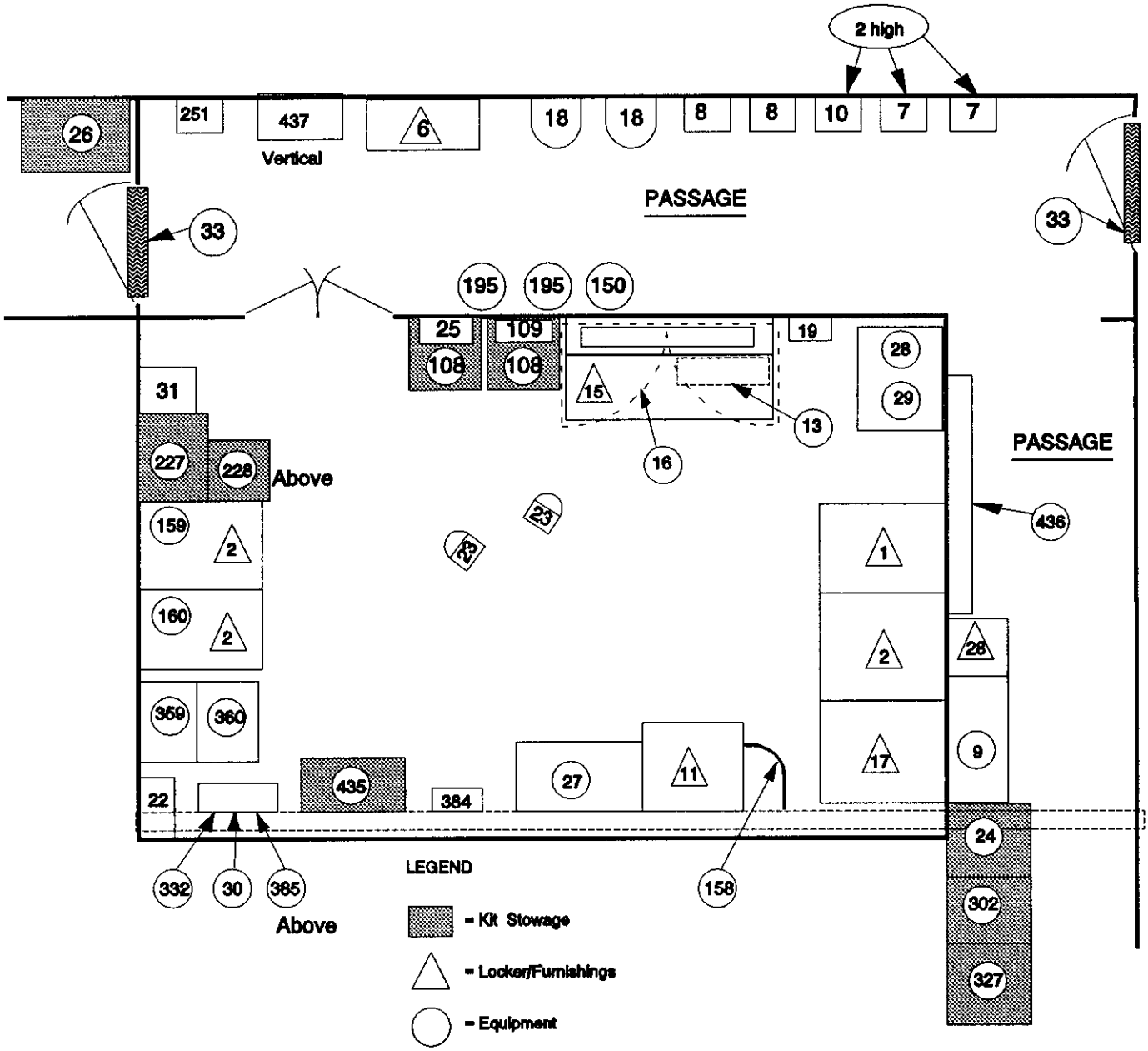

DAMAGE CONTROL EQUIPMENT STOWAGE SKETCH #002

TYPICAL DAMAGE CONTROL REPAIR STATION (PLAN VIEW)

Version 4

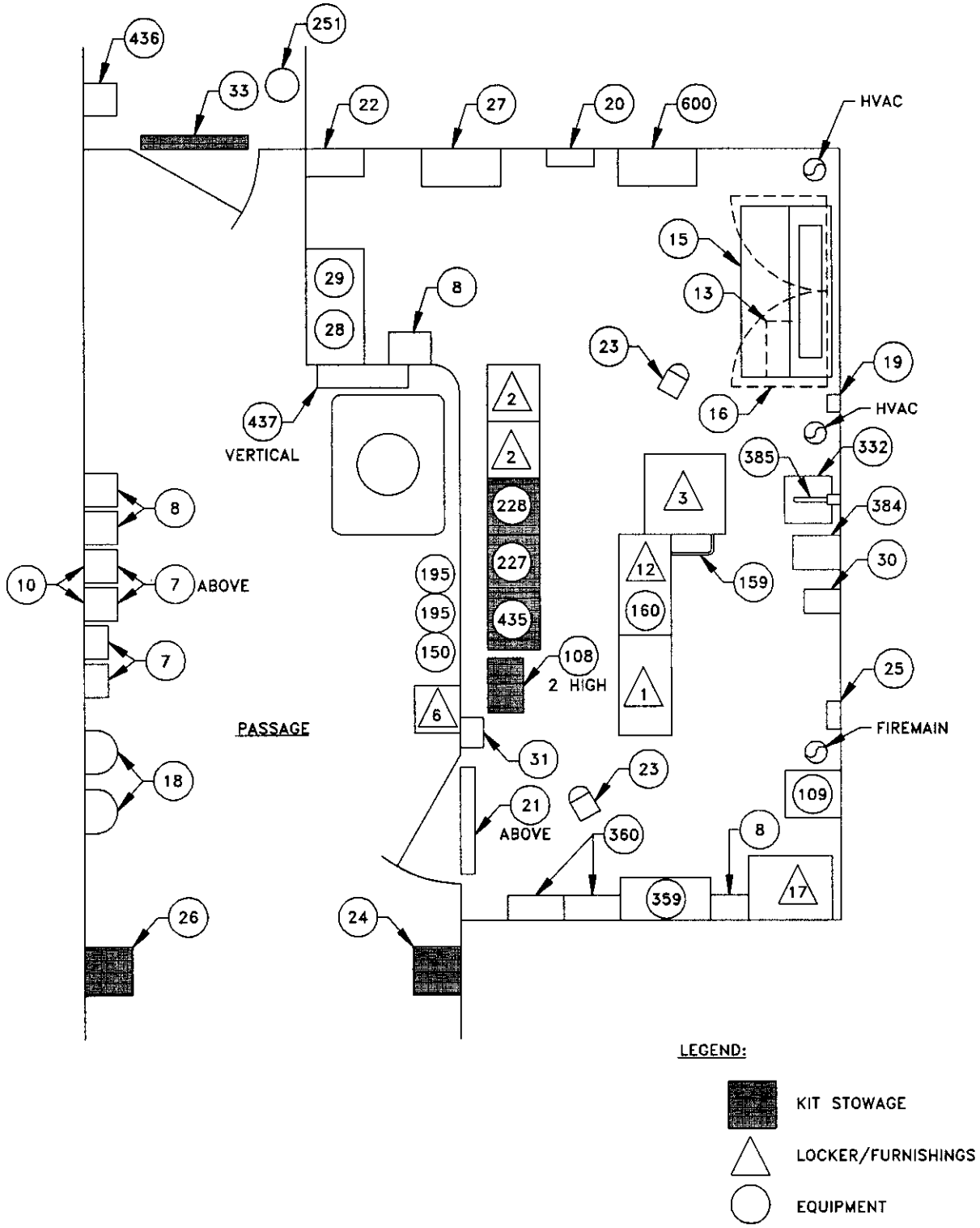

DAMAGE CONTROL EQUIPMENT STOWAGE SKETCH # 002

TYPICAL DAMAGE CONTROL REPAIR STATION (DCRS) SECONDARY DCC, VERSION 5

DCESS62

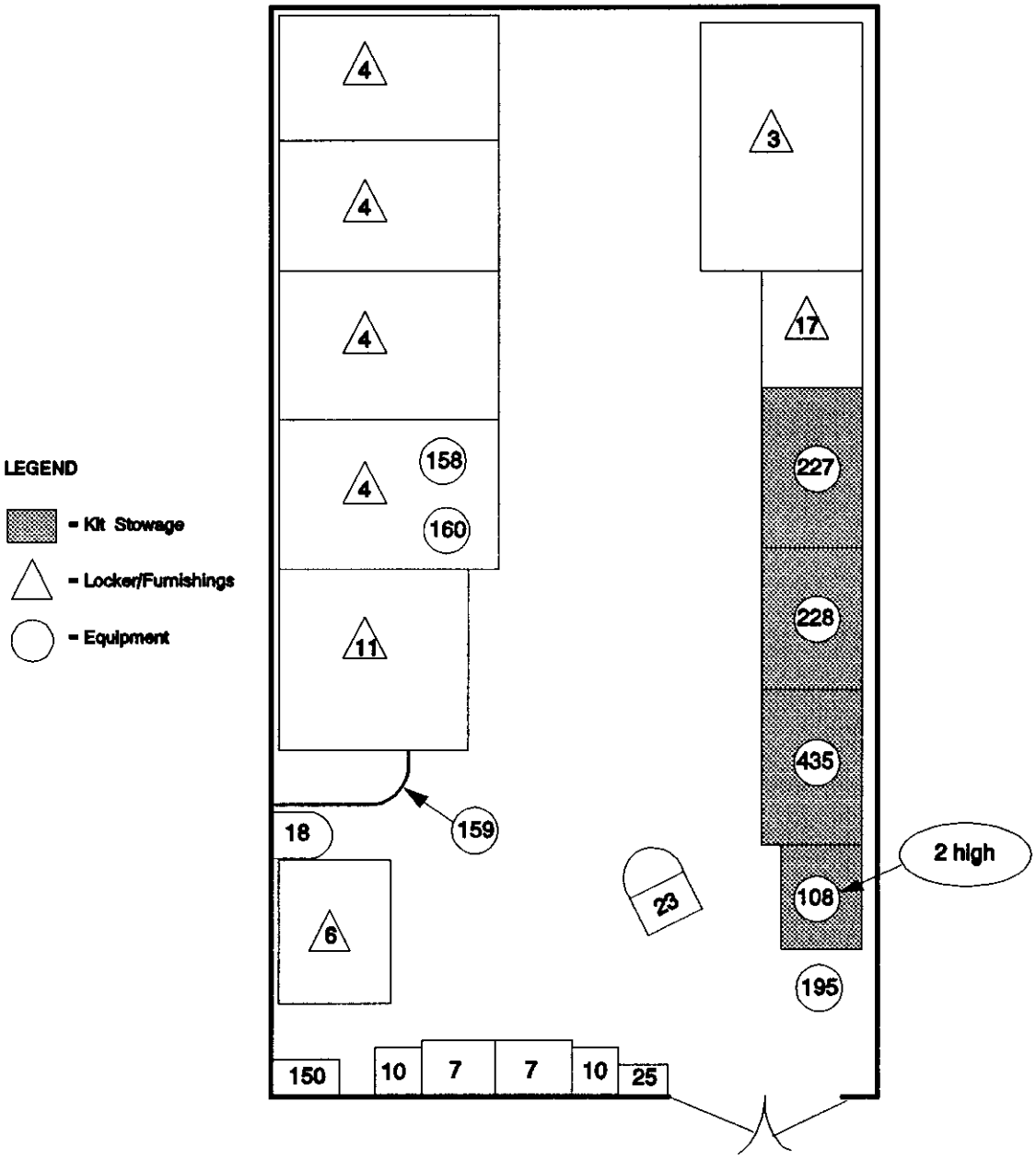

DAMAGE CONTROL EQUIPMENT STOWAGE SKETCH #003

TYPICAL DAMAGE CONTROL REPAIR STATION (PLAN VIEW)

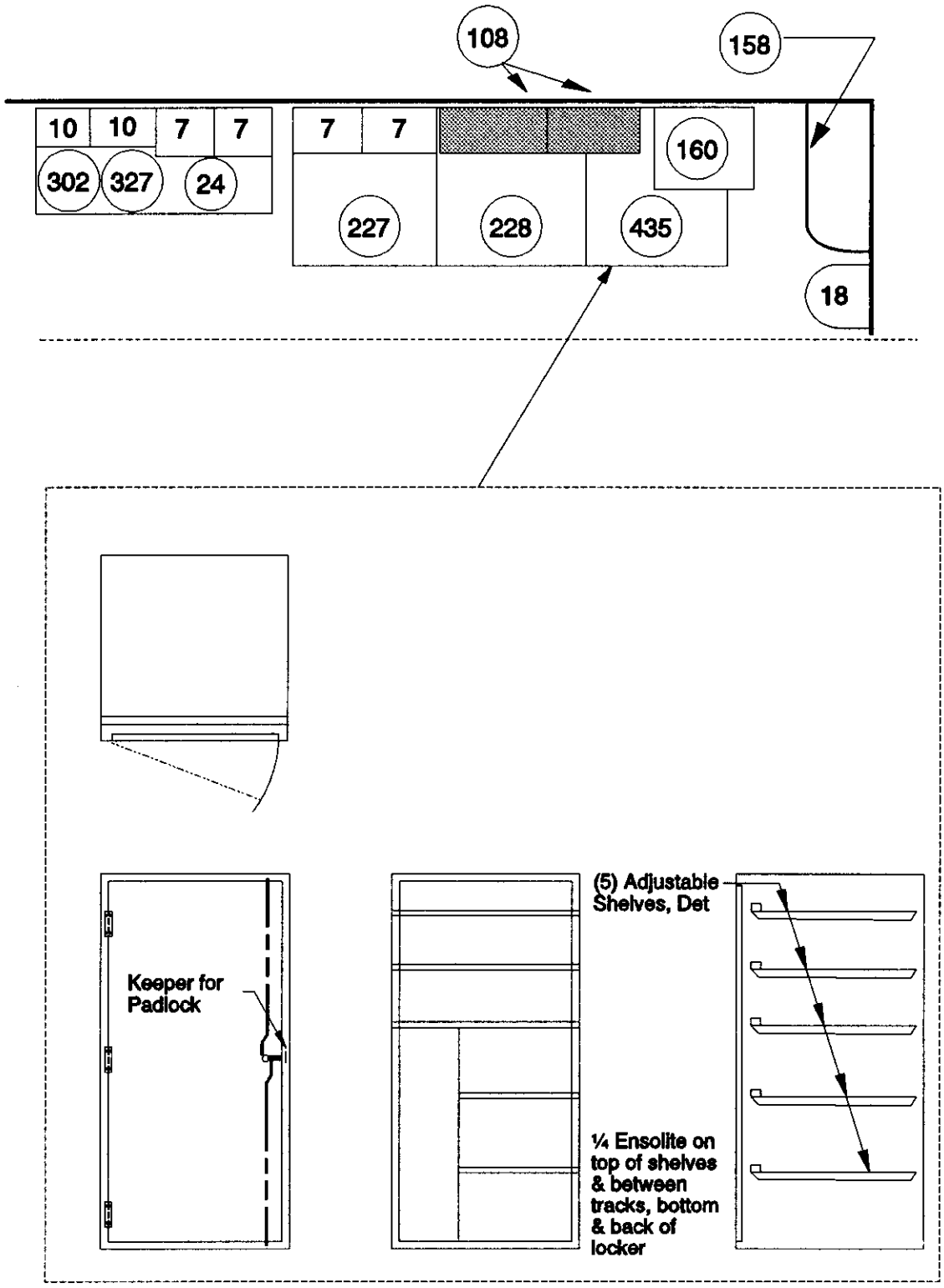

DAMAGE CONTROL EQUIPMENT STOWAGE SKETCH #004

TYPICAL DAMAGE CONTROL REPAIR STATION (PLAN VIEW)

Passage Stowage

LIST OF MATERIAL/EQUIPMENT			
Location No.	**Description**	**Dwg or Spec No.**	**Remarks**
1	CBR-D IPE Rack System	DC Equipment Stowage Sketch Sec. 4 #098, #099	The number of racks in a space is dependent on the size of the space.
2	MCU-2P Rack System	DC Equipment Stowage Sketch Sec. 4 #101	The number of racks in a space is dependent on the size of the space.
3	CBR-D IPE Kit	DC Equipment Stowage Sketch Sec. 4 #098	The number of racks in a space is dependent on the size of the space.
4	MCU-2P Kit	DC Equipment Stowage Sketch Sec. 4 #101	The number of racks in a space is dependent on the size of the space.
5	Berth		
6	Locker (Personal)		

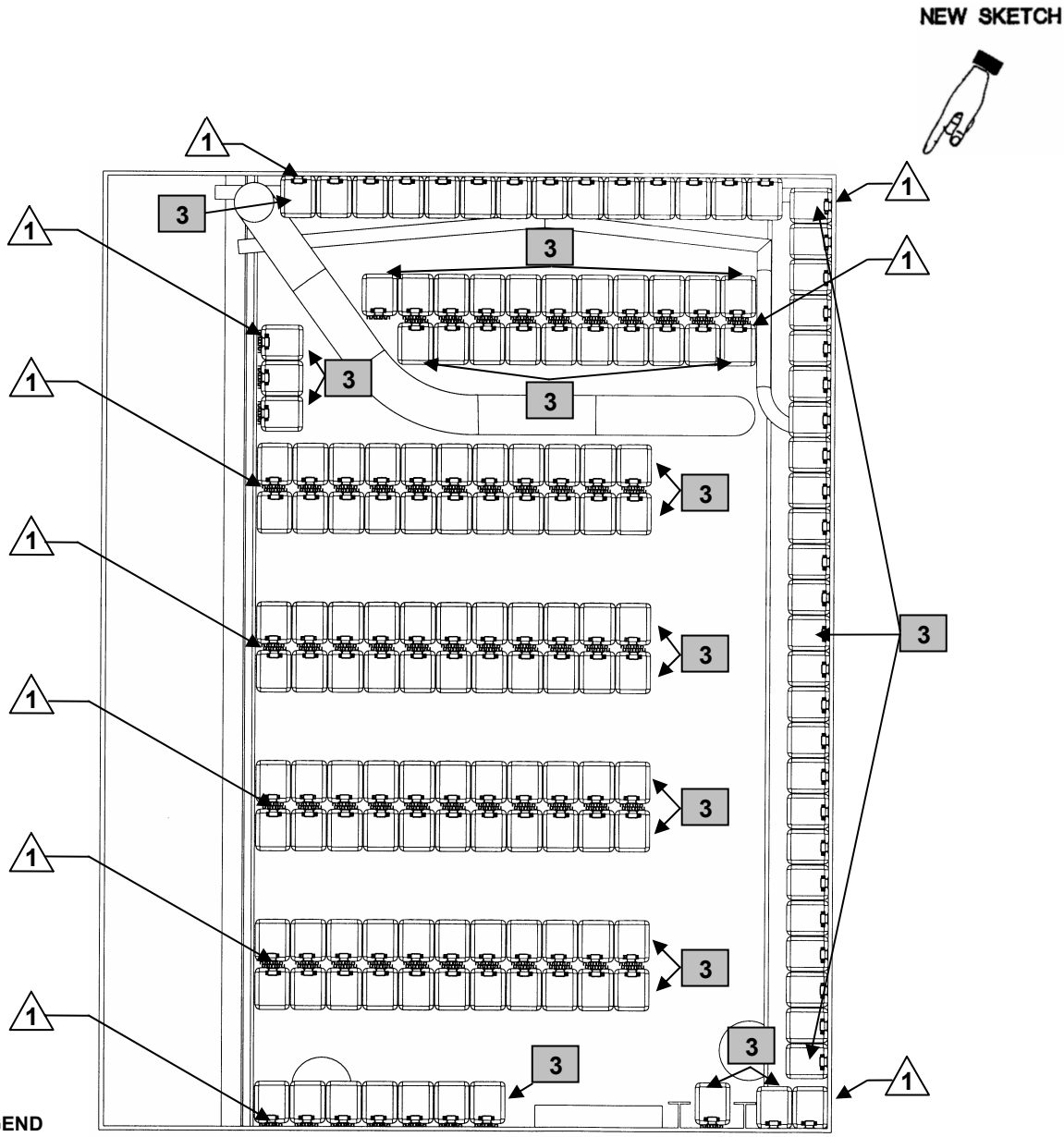

LEGEND

- Kit Stowage
- Locker/Furnishings

NOTE: 1. CBR RACK SYSTEMS ONLY CONTAIN INDIVIDUAL CBR-D IPE KITS.

2. CBR-D IPE KITS ARE STORED ON RACK SYSTEMS. EACH RACK CONTAINS 3 CBR-D IPE KITS ON INDIVIDUAL HOOKS.

DAMAGE CONTROL EQUIPMENT STOWAGE SKETCH #005

CBR-D IPE COMPARTMENT STOWAGE

VIEW #1 – OVERHEAD VIEW

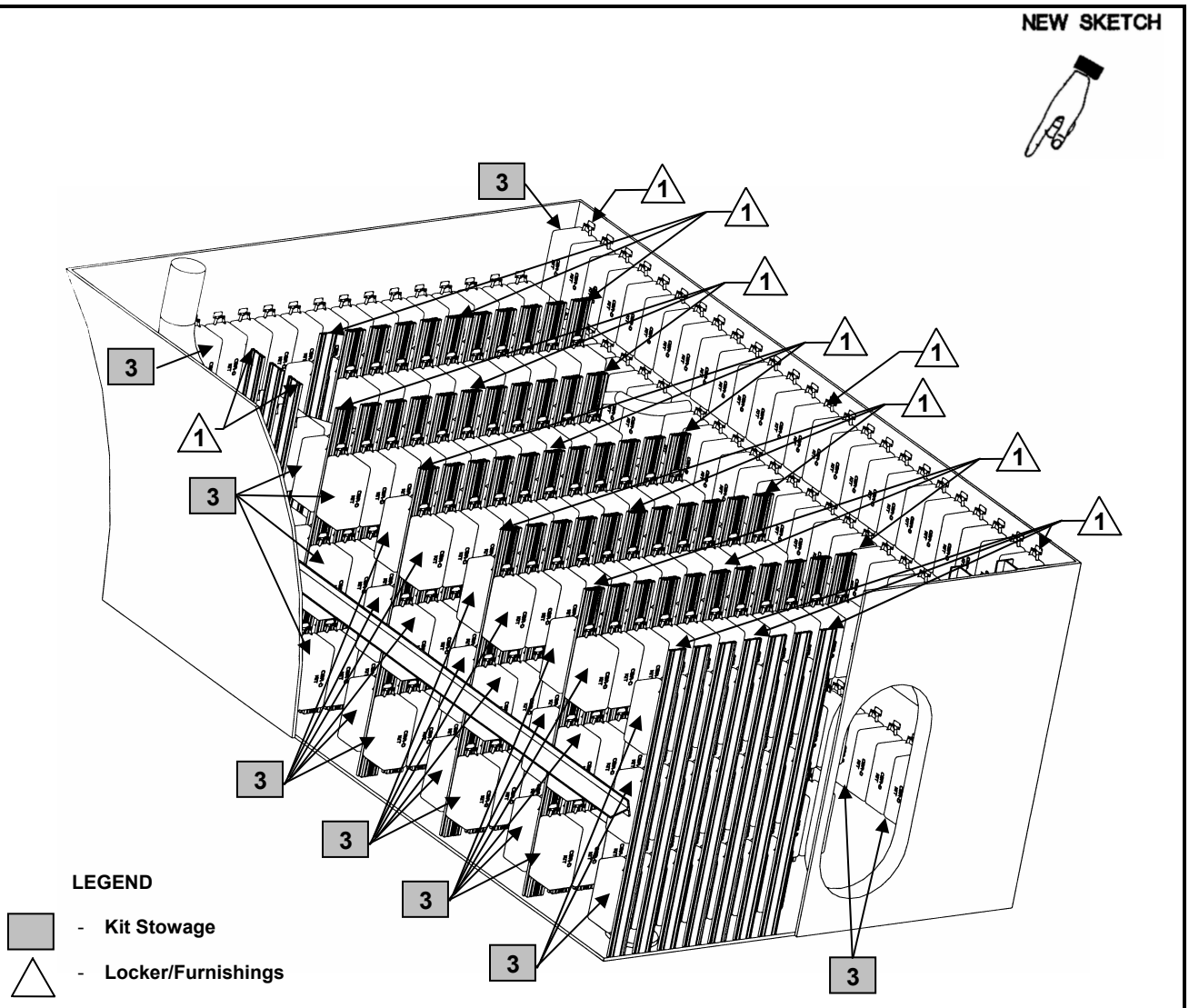

NOTE: 1. CBR RACK SYSTEMS ONLY CONTAIN INDIVIDUAL CBR-D IPE KITS.

2. CBR-D IPE KITS ARE STORED ON RACK SYSTEMS. EACH RACK CONTAINS 3 CBR-D IPE KITS ON INDIVIDUAL HOOKS.

DAMAGE CONTROL EQUIPMENT STOWAGE SKETCH #006

CBR-D IPE COMPARTMENT STOWAGE

VIEW #2 – 3D VIEW

NEW SKETCH

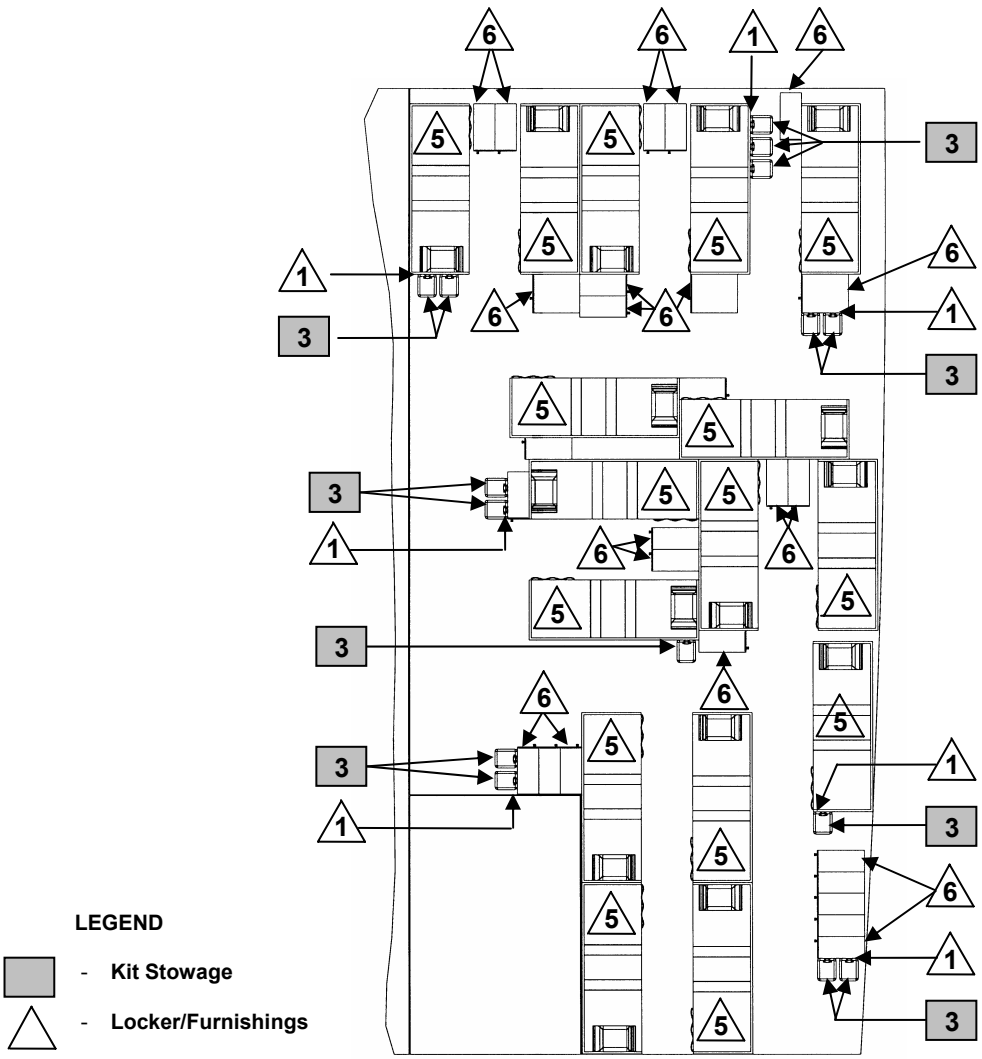

NOTE: 1. CBR RACK SYSTEMS ONLY CONTAIN INDIVIDUAL CBR-D IPE KITS.

2. CBR-D IPE KITS ARE STORED ON RACK SYSTEMS. EACH RACK CONTAINS 3 CBR-D IPE KITS ON INDIVIDUAL HOOKS.

DAMAGE CONTROL EQUIPMENT STOWAGE SKETCH #007

CBR-D IPE STOWAGE IN BERTHING COMPARTMENT

VIEW #1 – OVERHEAD VIEW

NEW SKETCH

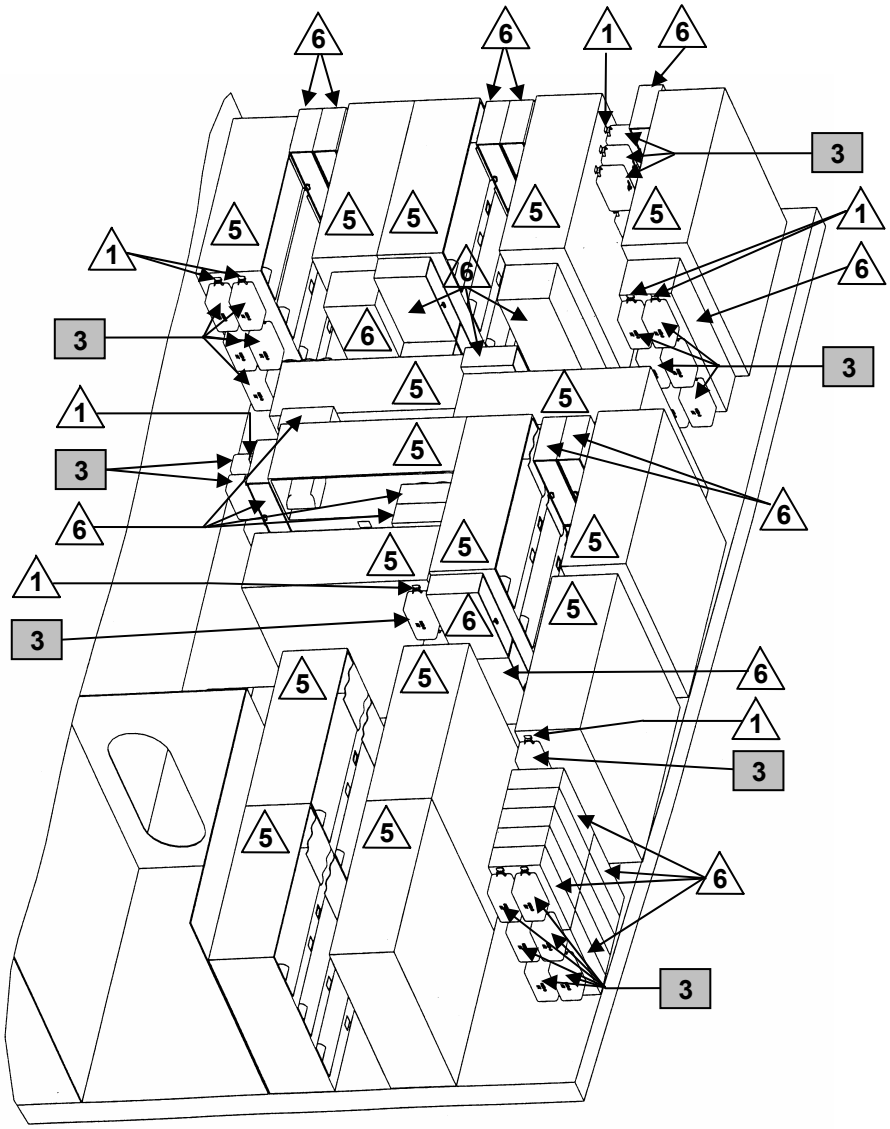

LEGEND

- **Kit Stowage**
- **Locker/Furnishings**

NOTE: 1. CBR RACK SYSTEMS ONLY CONTAIN INDIVIDUAL CBR-D IPE KITS.

2. CBR-D IPE KITS ARE STORED ON RACK SYSTEMS. EACH RACK CONTAINS 3 CBR-D IPE KITS ON INDIVIDUAL HOOKS.

DAMAGE CONTROL EQUIPMENT STOWAGE SKETCH #008

CBR-D IPE STOWAGE IN BERTHING COMPARTMENT

VIEW #2 – 3D VIEW

NEW SKETCH

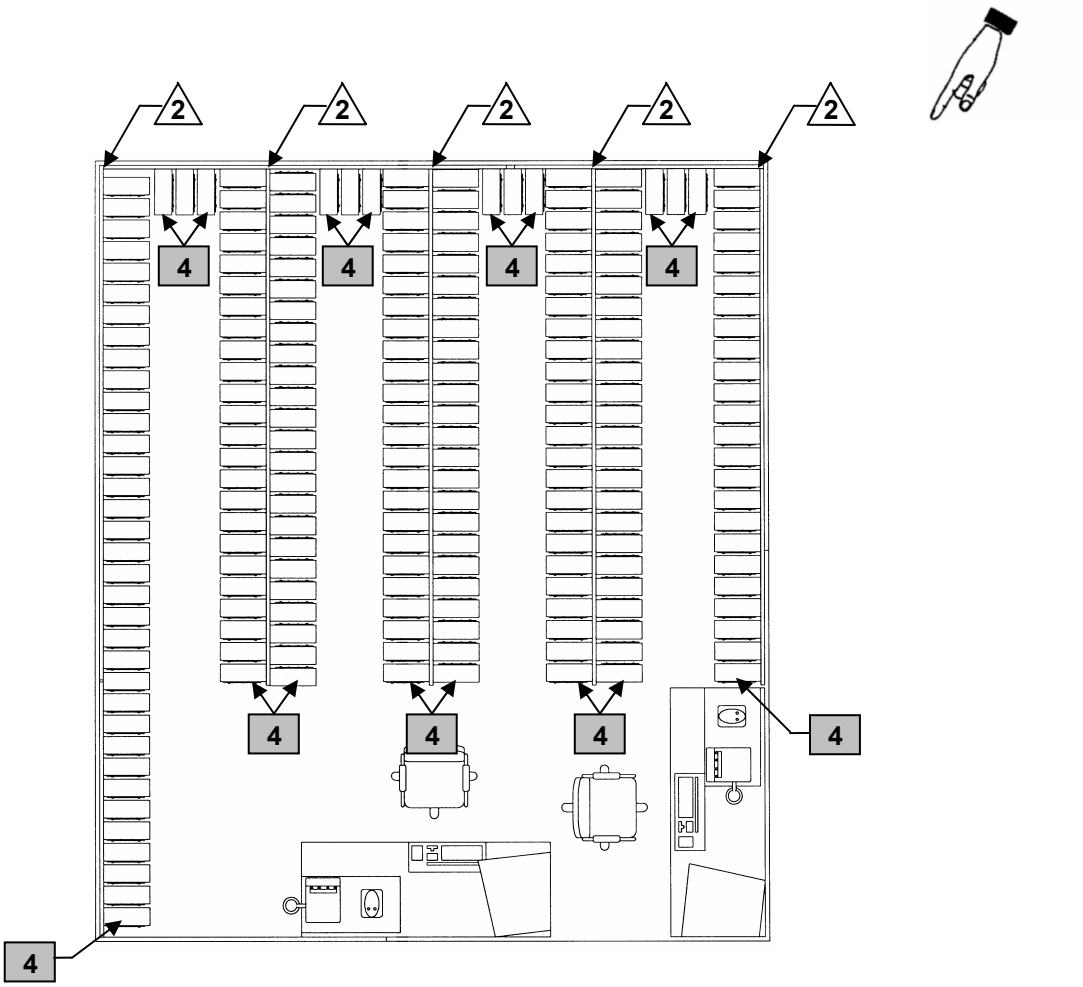

LEGEND

- **Kit Stowage**
- **Locker/Furnishings**

NOTE: 1. MCU-2P RACK SYSTEMS ONLY CONTAIN INDIVIDUAL MCU-2P KITS.

2. MCU-2P KITS ARE STORED ON RACK SYSTEMS. EACH RACK CONTAINS 7 MCU-2P KITS ON INDIVIDUAL HOOKS.

DAMAGE CONTROL EQUIPMENT STOWAGE SKETCH #009

MCU-2P MASS STOWAGE

VIEW #1 – OVERHEAD VIEW

NEW SKETCH

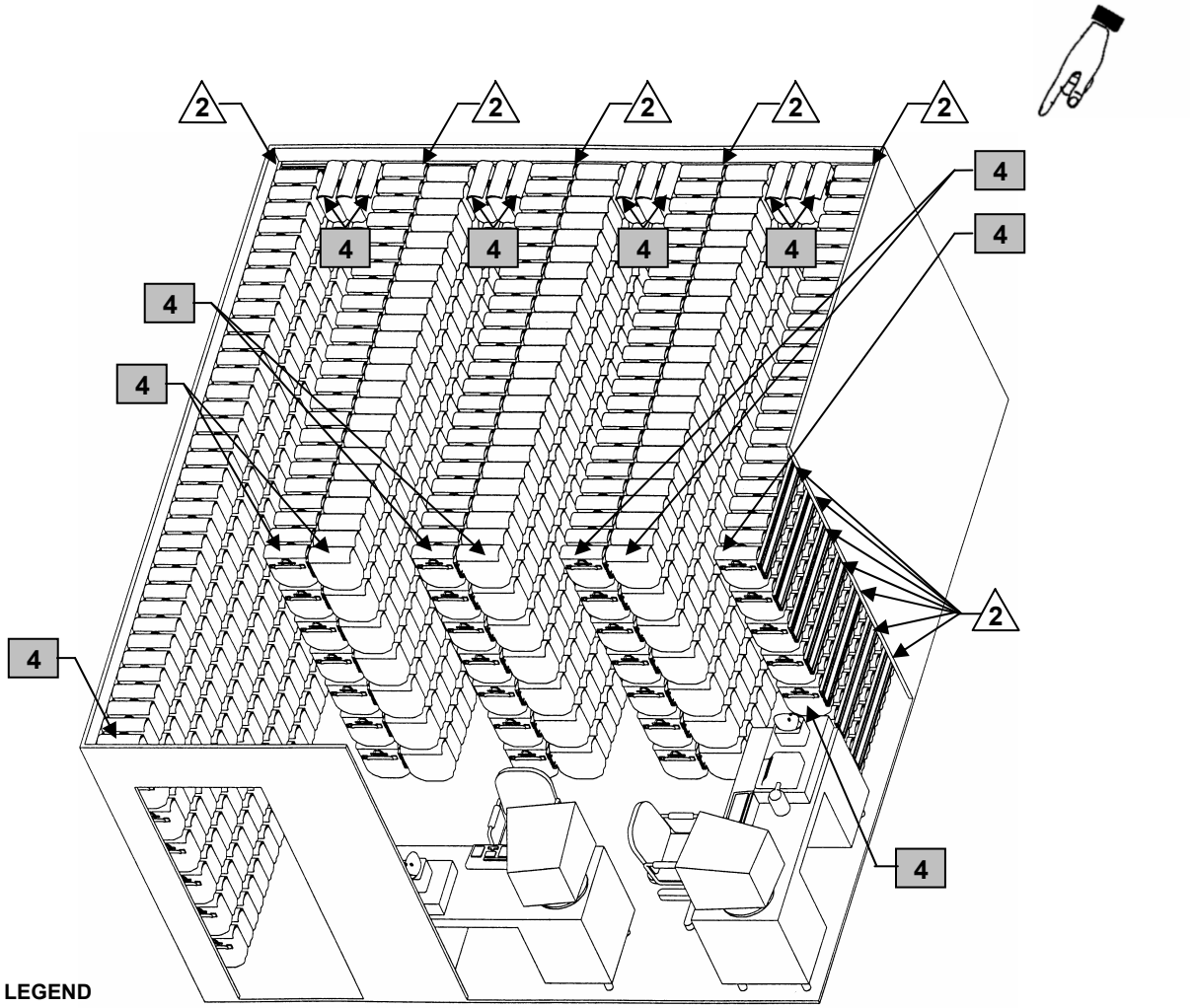

LEGEND

- Kit Stowage
- Locker/Furnishings

NOTE: 1. MCU-2P RACK SYSTEMS ONLY CONTAIN INDIVIDUAL MCU-2P KITS.

2. MCU-2P KITS ARE STORED ON RACK SYSTEMS. EACH RACK CONTAINS 7 MCU-2P KITS ON INDIVIDUAL HOOKS.

DAMAGE CONTROL EQUIPMENT STOWAGE SKETCH #010

MCU-2P MASS STOWAGE

VIEW #2 – 3D VIEW

NEW SKETCH

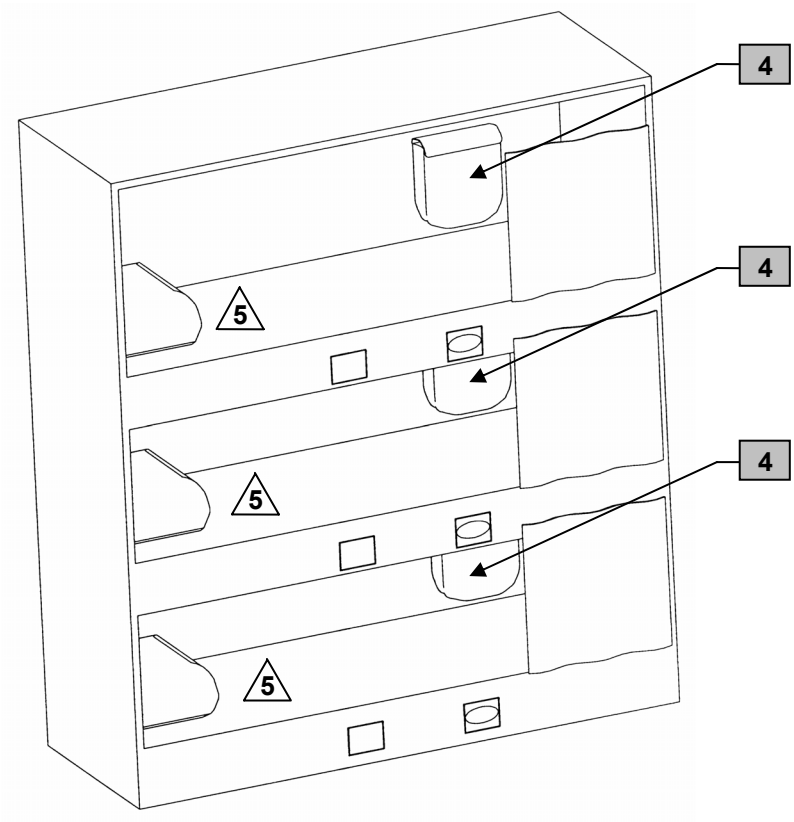

LEGEND

- **Kit Stowage**
- **Locker/Furnishings**

NOTE: 1. MCU-2P RACK SYSTEMS ONLY CONTAIN INDIVIDUAL MCU-2P KITS.

DAMAGE CONTROL EQUIPMENT STOWAGE SKETCH #011

MCU-2P STOWAGE IN BERTHING

NEW SKETCH

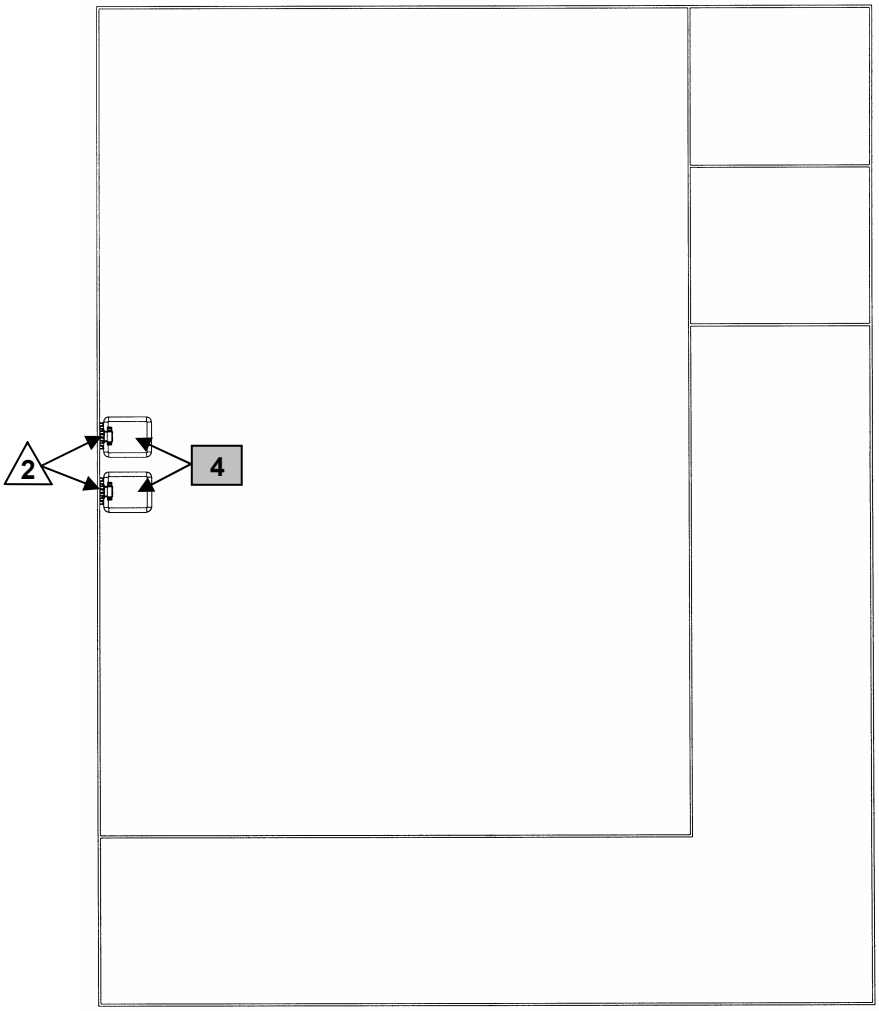

LEGEND

- **Kit Stowage**
- **Locker/Furnishings**

NOTE: 1. MCU-2P RACK SYSTEMS ONLY CONTAIN INDIVIDUAL MCU-2P KITS.

2. MCU-2P KITS ARE STORED ON RACK SYSTEMS. EACH RACK CONTAINS 3 MCU-2P KITS ON INDIVIDUAL HOOKS.

DAMAGE CONTROL EQUIPMENT STOWAGE SKETCH #012

MCU-2P STOWAGE IN DECONTAMINATION STATION

VIEW #1 – OVERHEAD VIEW

NEW SKETCH

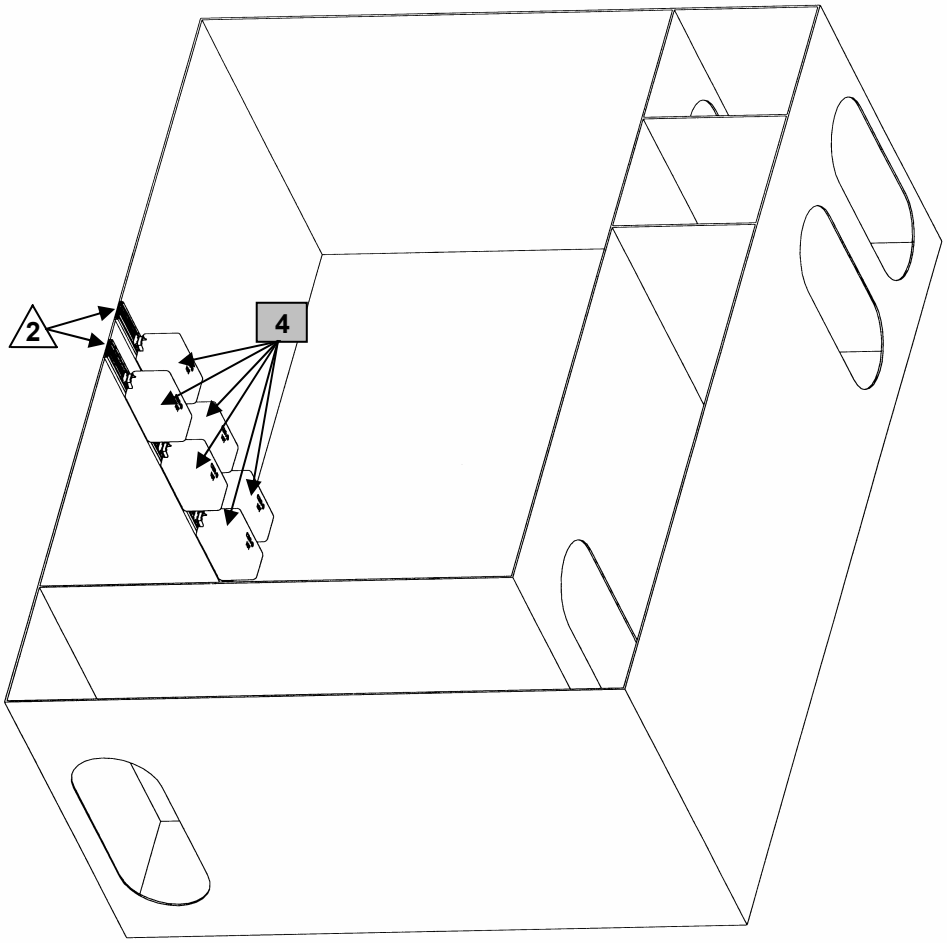

LEGEND

- **Kit Stowage**
- **Locker/Furnishings**

NOTE: 1. MCU-2P RACK SYSTEMS ONLY CONTAIN INDIVIDUAL MCU-2P KITS.

2. MCU-2P KITS ARE STORED ON RACK SYSTEMS. EACH RACK CONTAINS 3 MCU-2P KITS ON INDIVIDUAL HOOKS.

DAMAGE CONTROL EQUIPMENT STOWAGE SKETCH #013

MCU-2P STOWAGE IN DECONTAMINATION STATION

VIEW #2 – 3D VIEW

Section 3

PLAN LAYOUT SAMPLE SKETCHES OF DAMAGE CONTROL KITS BY FUNCTION

- **Fire Fighting Dressout**
- **Desmoking**
- **Dewatering**
- **Personnel Protection Equipment Stowage Bag**
- **Portable Hydraulic Access and Rescue System (PHARS)**
- **CBR-D IPE**
- **MCU-2P**

DAMAGE CONTROL EQUIPMENT STOWAGE SKETCHES

SECTION 3 SKETCH NO.	TITLE OF SKETCH
001	Fire Fighter Dress Out Area Plan #1A
002	Fire Fighter Dress Out Area Plan #1B
003	Fire Fighter Dress Out Area Plan #1C
004	Fire Fighter Dress Out Area Plan #1D
005	Fire Fighter Dress Out Area Plan #1E
006	Fire Fighter Dress Out Area Plan #1F
007	Fire Fighter Dress Out Area Plan #1G
008	Fire Fighter Dress Out Area Plan #1H
009	Fire Fighter Dress Out Area Plan #1I
010	Desmoking Equipment Plan #2A
011	Desmoking Equipment Plan #2B
012	Desmoking Equipment Plan #2C
013	Desmoking Equipment Plan #2D
014	Desmoking Equipment Plan #2E
015	Desmoking Equipment Plan #2F
016	Desmoking Equipment Plan #2G
017	Dewatering Equipment Plan P-250 Pump and Accessories Plan #3A
018	Dewatering Equipment Plan P-250 Pump and Accessories Plan #3B
019	Dewatering Equipment Plan P-250 Pump and Accessories Plan #3C
020	Dewatering Equipment Plan #3D
021	Dewatering Equipment Plan #3E
022	Dewatering Equipment Plan #3F
023	Dewatering Equipment Plan #3G
024	Dewatering Equipment Plan #3H
25	Personnel Protection Equipment Stowage Bag
025	Portable Hydraulic Access and Rescue System (PHARS) Plan #1
026	Portable Hydraulic Access and Rescue System (PHARS) Plan #2
027	Portable Hydraulic Access and Rescue System (PHARS) Plan #3
028	Portable Hydraulic Access and Rescue System (PHARS) Plan #3A

SECTION 3 SKETCH NO.	TITLE OF SKETCH
029	CBR-D IPE Stowage Rack System
030	MCU-2P Stowage Plan – Berthing Area
031	MCU-2P Stowage Plan – Workstation
032	MCU-2P Stowage Plan – Bridge Watch Station

(a) 1 PERSONNEL LOCKER, 27" x 21" x 74"

1 BAG, FIREMANS
6 PAIRS BOOTS (SEL SIZE)
6 PAIRS COVERALL (SEL SIZE)
6 OBA CANISTERS (READY SERVICE)
6 PAIRS GLOVES

(b) 2 HELMET RACK, 16" x 13" x 48" (10 PCS)
(c) 4 CANISTER RACK, 8" x 8-1/8" x 42" (36 EACH)
(d) 2 OBA CANISTER, PORTABLE PACK (DC 0004)
(e) 6 FF COVERALL (ENSEMBLE) (3 HUNG ON EACH SIDE OF LOCKER)

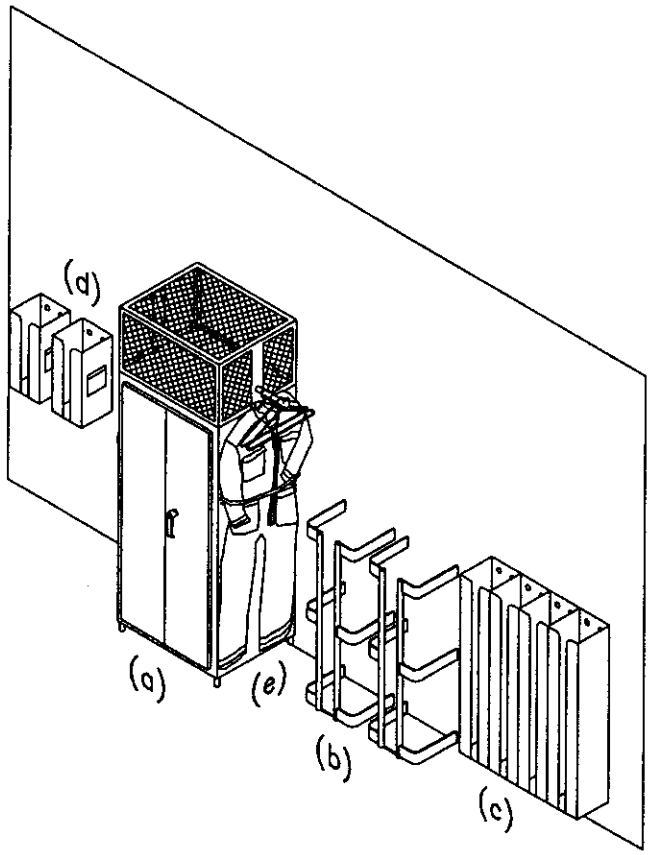

DAMAGE CONTROL EQUIPMENT STOWAGE SKETCH # 001

FIREFIGHTER DRESS OUT AREA PLAN # 1A

DCESS001

(a) BOOTS LOCKER
(b) ABT
(c) HELMET RACK, 16" x 13" x 48" (10 PCS)
(d) OBA LOCKER
(e) OBA CANISTER, PORTABLE PACK (6 CANISTER)
(f) 6 ENSEMBLES

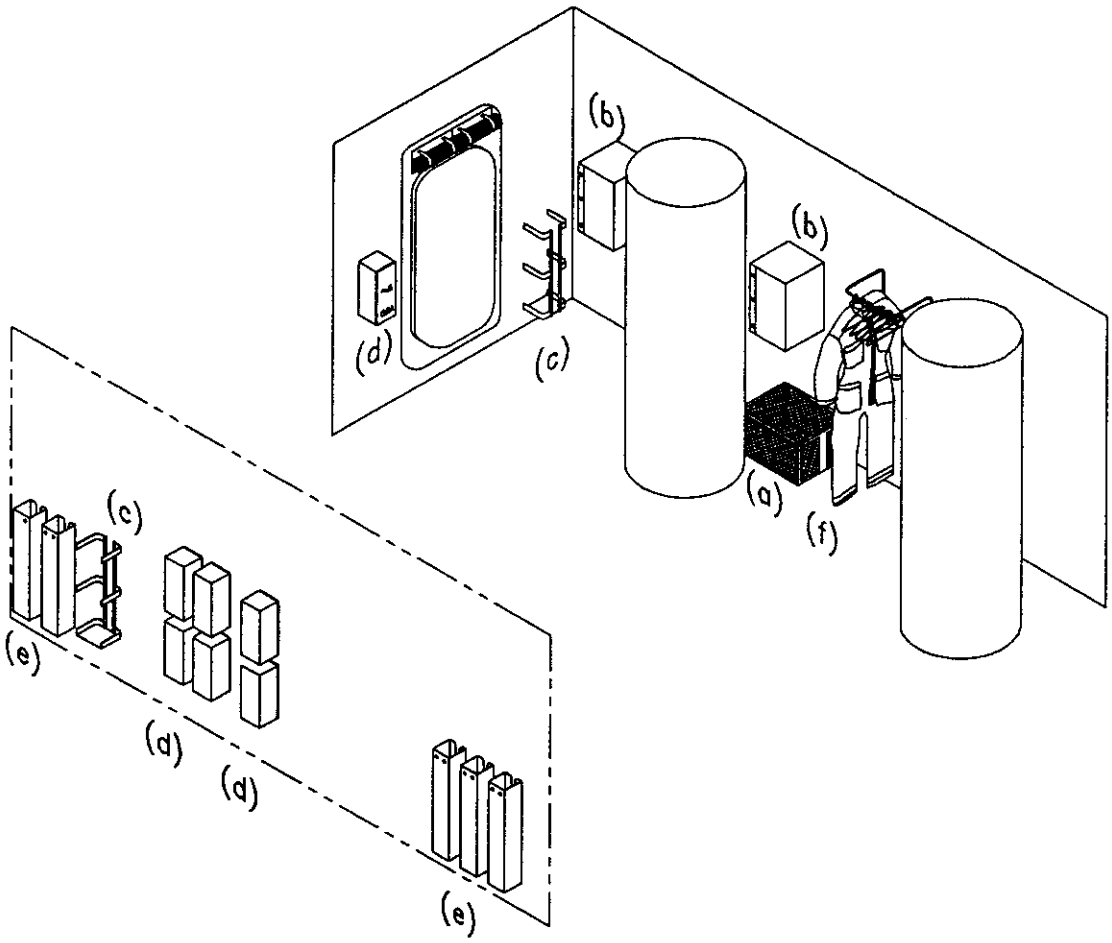

DAMAGE CONTROL EQUIPMENT STOWAGE SKETCH # 002

FIREFIGHTER DRESS OUT AREA PLAN #1B

DCESS002

(a) 1 BOOTS LOCKER
(b) 6 CANISTER RACKS, (6 PACK)
(c) 6 OBA LOCKER
(d) 3 ENSEMBLES

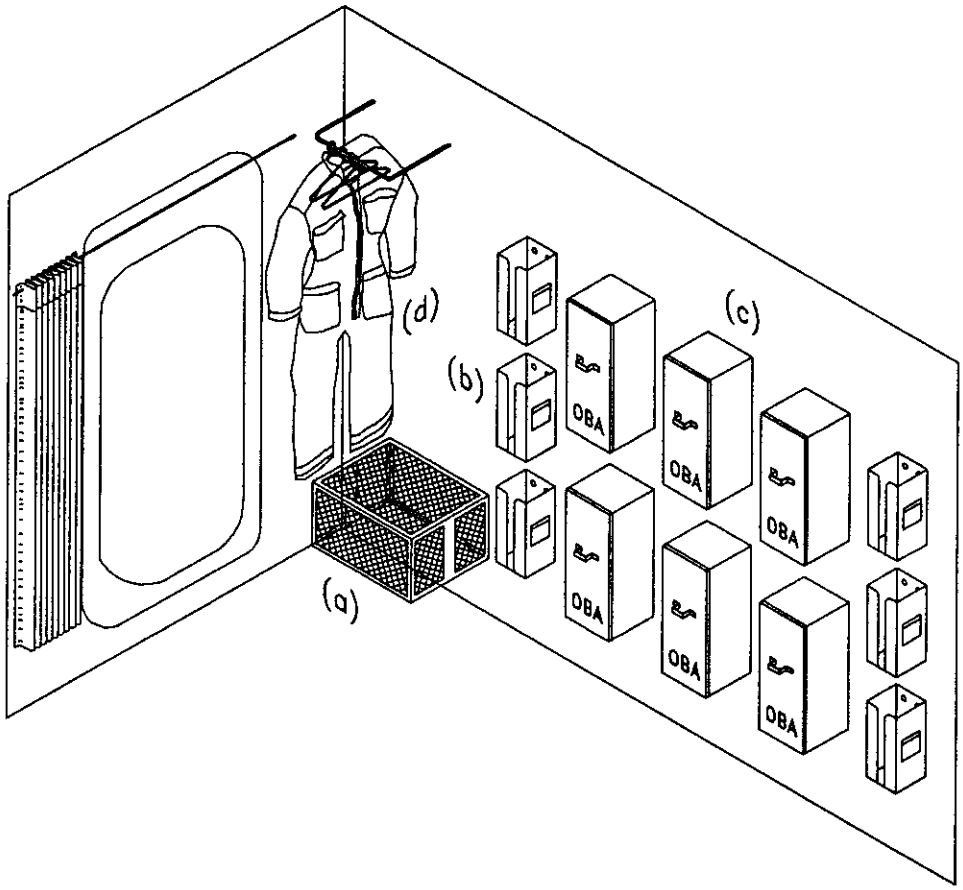

DAMAGE CONTROL EQUIPMENT STOWAGE SKETCH # 003

FIREFIGHTER DRESS OUT AREA PLAN #1C

DCESS003

(a) 1 BOOTS LOCKER
(b) 6 CANISTER RACKS, (6 PACK)
(c) 6 OBA LOCKER
(d) 6 HELMETS
(e) 6 ENSEMBLES

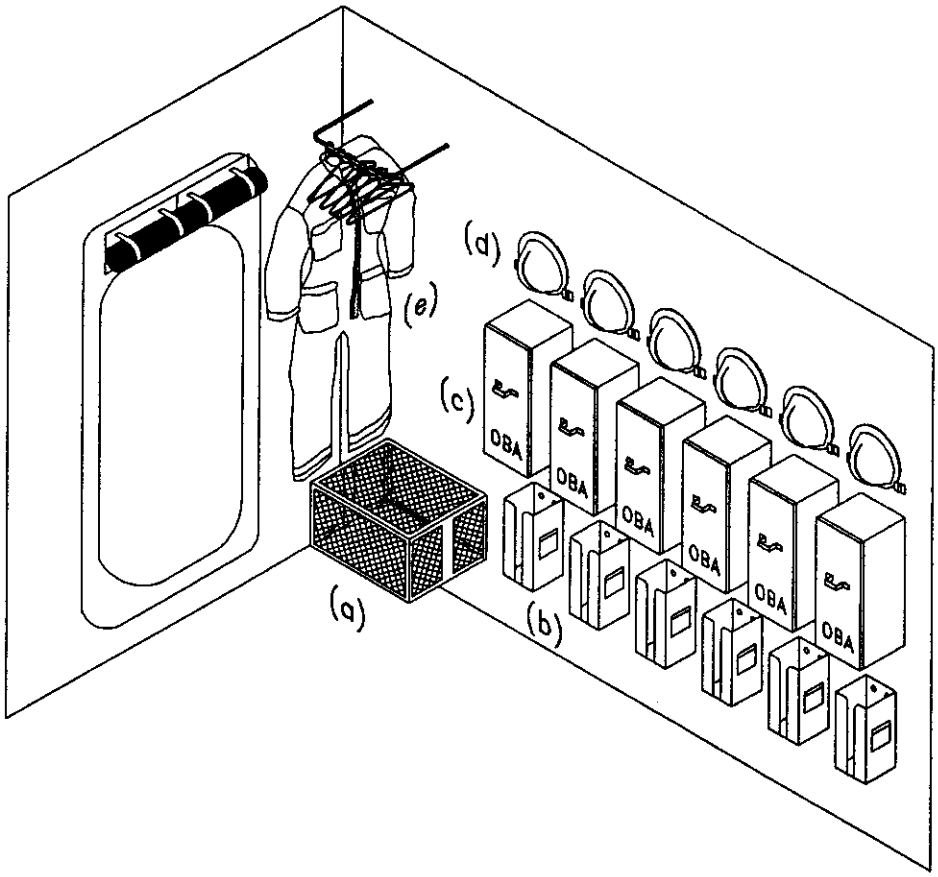

DAMAGE CONTROL EQUIPMENT STOWAGE SKETCH # 004

FIREFIGHTER DRESS OUT AREA PLAN #1D

DCES5904

(a) 1 CANISTER RACK, 8" x 8-1/8" x 42" (36 EACH)
(b) 6 HELMET
(c) 6 OBA RACKS WITH BOOTS
(d) 6 ENSEMBLES

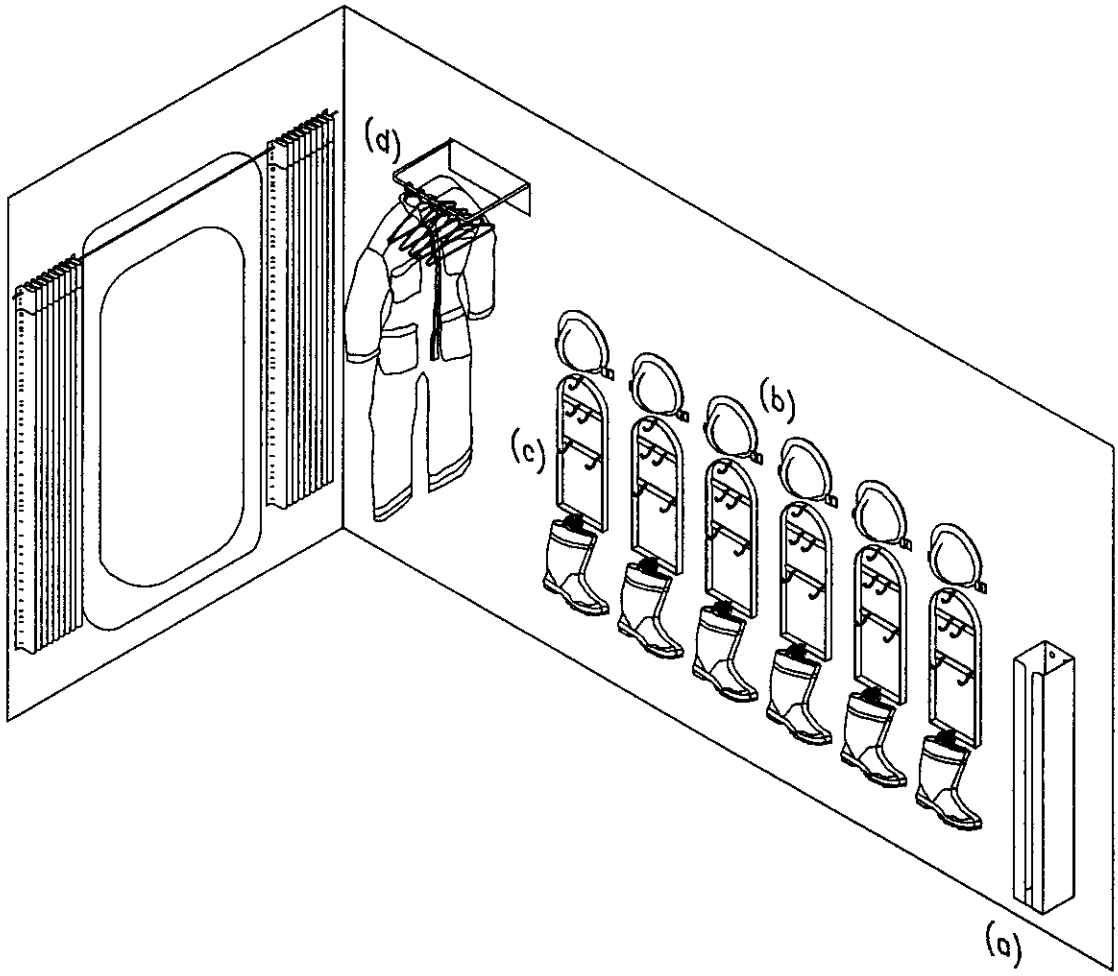

DAMAGE CONTROL EQUIPMENT STOWAGE SKETCH # 005

FIREFIGHTER DRESS OUT AREA PLAN #1E

DCESS005

(a) 6 HELMET
(b) 6 FIREMAN'S BAG

6 PAIRS BOOTS
6 PAIRS GLOVES
6 OBA
6 FF COVERALL

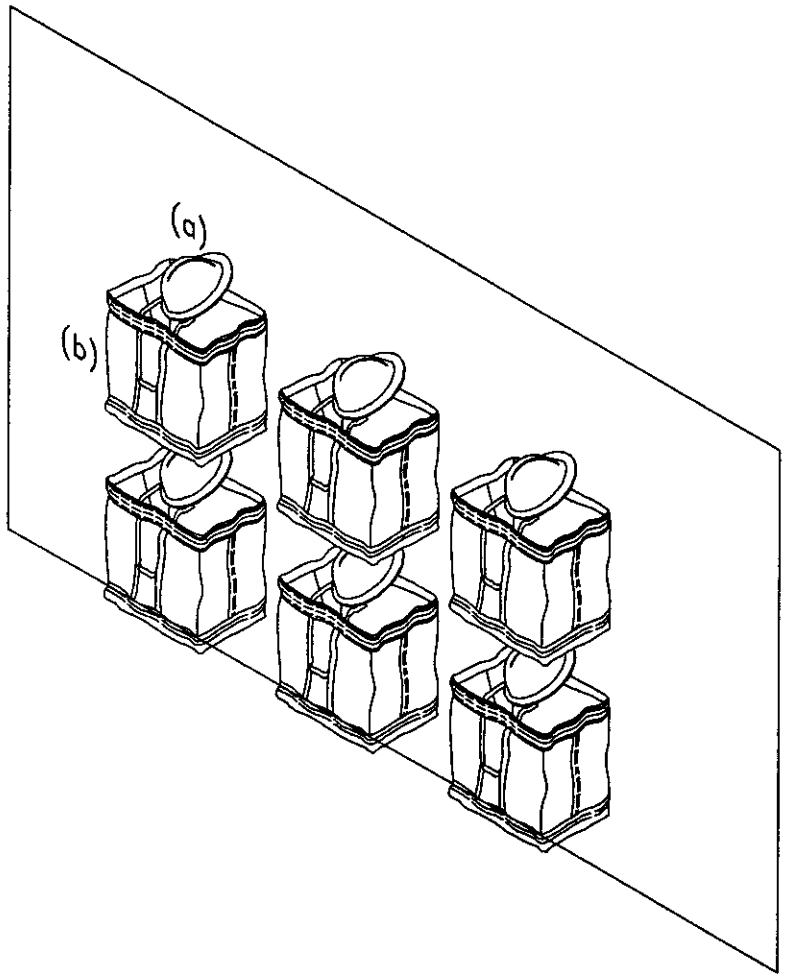

DAMAGE CONTROL EQUIPMENT STOWAGE SKETCH # 006

FIREFIGHTER DRESS OUT AREA #1F

DCESS006

(a) 1 BOOTS LOCKER (6 PAIRS)
(b) 6 ENSEMBLES (SEL SIZE)
(c) 6 HELMETS
(d) 6 OBA RACK
(e) 2 CANISTER RACKS (6 PACK) (DC 0004)
(f) 1 CANISTER RACK, 8" x 8-1/8" x 42" (36 CANS)

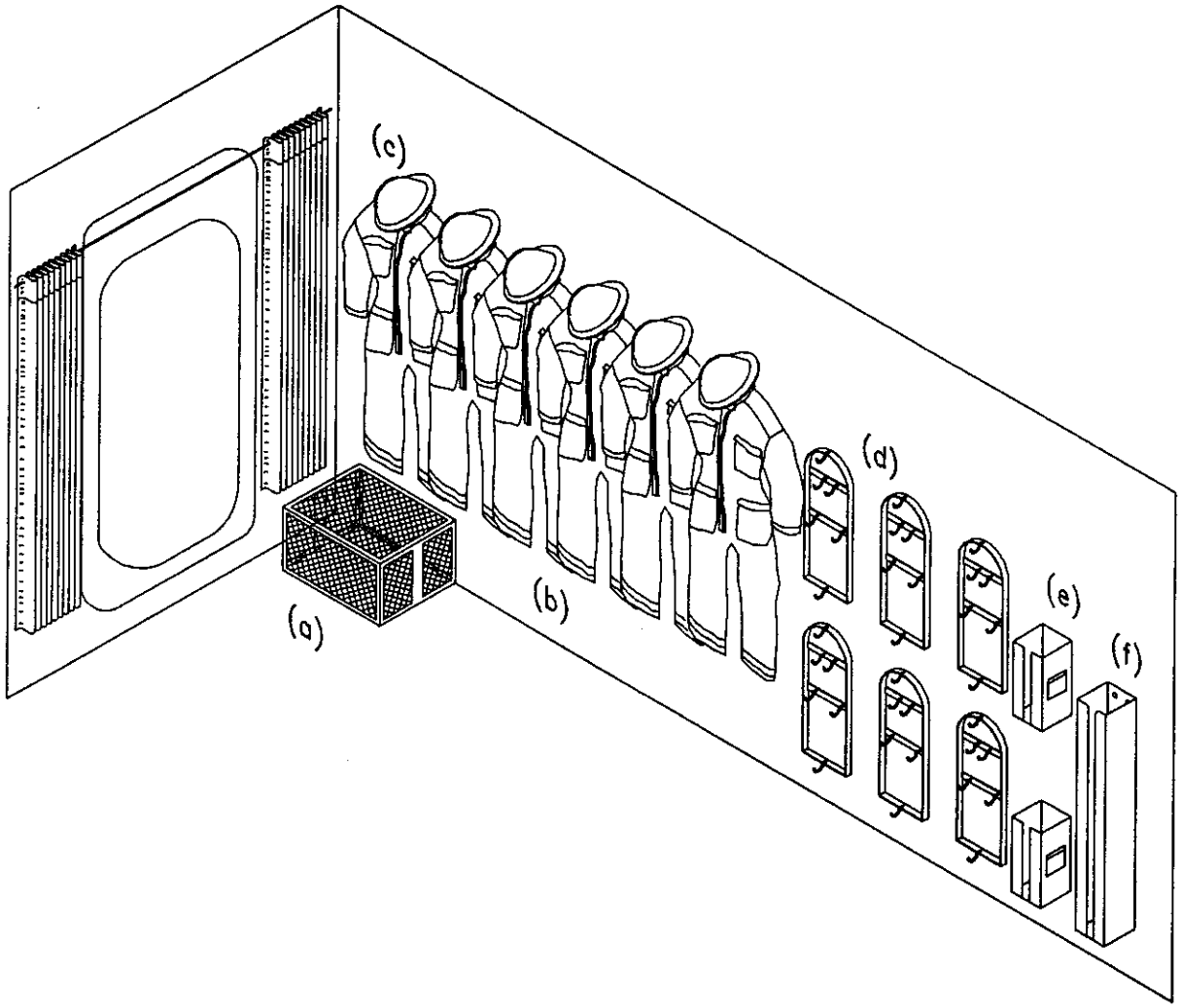

DAMAGE CONTROL EQUIPMENT STOWAGE SKETCH # 007

FIREFIGHTER DRESS OUT AREA PLAN #1G

DCESS007

(a) 1 PERSONNEL LOCKER, 27" x 21" x 74"

- 1 BAG, FIREMANS
- 6 PAIRS BOOTS (SEL SIZE)
- 6 PAIRS COVERALL (SEL SIZE)
- 6 OBA CANISTERS (READY SERVICE)
- 6 PAIRS GLOVES

(b) 2 CANISTER RACK, 8" x 8-1/8" x 36" (36 EACH)
(c) 1 HELMET RACK, 16" x 13" x 48" (10 PCS)
(d) 2 OBA RACKS ("INVESTIGATOR")
(e) 2 OBA CANISTER, PORTABLE PACK (DC 0004)
(f) 6 ENSEMBLES (3 HUNG ON EACH SIDE OF LOCKER)

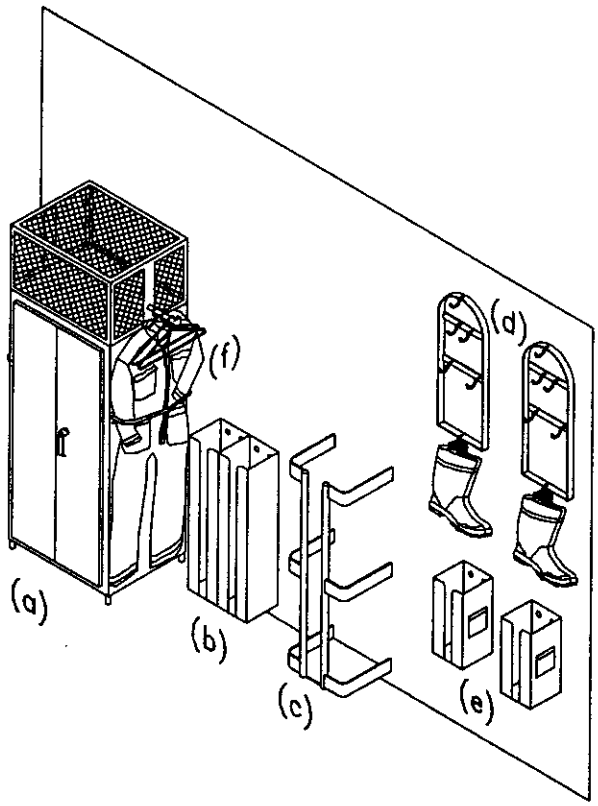

DAMAGE CONTROL EQUIPMENT STOWAGE SKETCH # 008

FIREFIGHTER DRESS OUT AREA PLAN #1H

DCESS008

(a) 1 PERSONNEL LOCKER, 27" x 21" x 74"

1 BAG, FIREMANS
6 PAIRS BOOTS (SEL SIZE)
6 PAIRS COVERALL (SEL SIZE)
6 OBA CANISTERS (READY SERVICE)
6 PAIRS GLOVES

(b) 2 HELMET RACK, 16" x 13" x 48" (10 PCS)
(c) 4 CANISTER RACK, 8" x 8-1/8" x 42" (36 EACH)
(d) 6 FF COVERALL (ENSEMBLE) (3 HUNG ON EACH SIDE OF LOCKER)

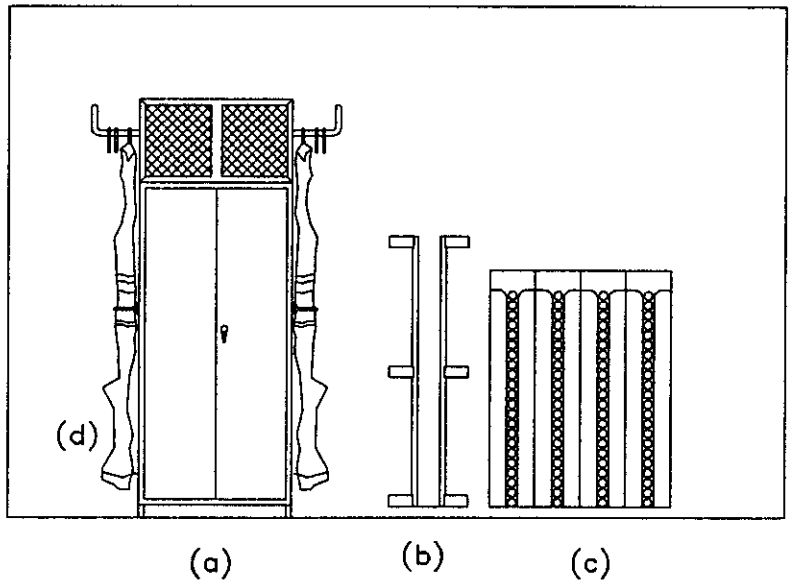

DAMAGE CONTROL EQUIPMENT STOWAGE SKETCH # 009

FIREFIGHTER DRESS OUT AREA PLAN #1I

DCCS5809

(a) 1 RACK – SMOKE CURTAIN
(b) 2 SMOKE CURTAINS PRE–HANG
(c) 1 FAN TUBEAXIAL 5200 CPFM
(d) 2 FAN VANEAXIAL (RED DEVIL)
(e) 1 RAM FAN, WATER DRIVEN
(f) 4 HOSE AIRDUCT
(g) 2 CABLE ASSEMBLY 25 Ft (STOWED, 1 EACH RED DEVIL)
(h) 2 OBA LOCKERS
(i) 2 CANISTER RACKS (6 PACK)
(j) 1 ELECTRICAL CONNECTION OUTLET
(k) 1 GAS FREE ENGINEERS EQUIPMENT STOWAGE
(l) 1 OVERBOARD DISCHARGE
(m) 1 HOSE ASSEMBLY, 1–1/2" x 50'
(n) 2 HOSE ASSEMBLY, 2–1/2" x 1–1/2"

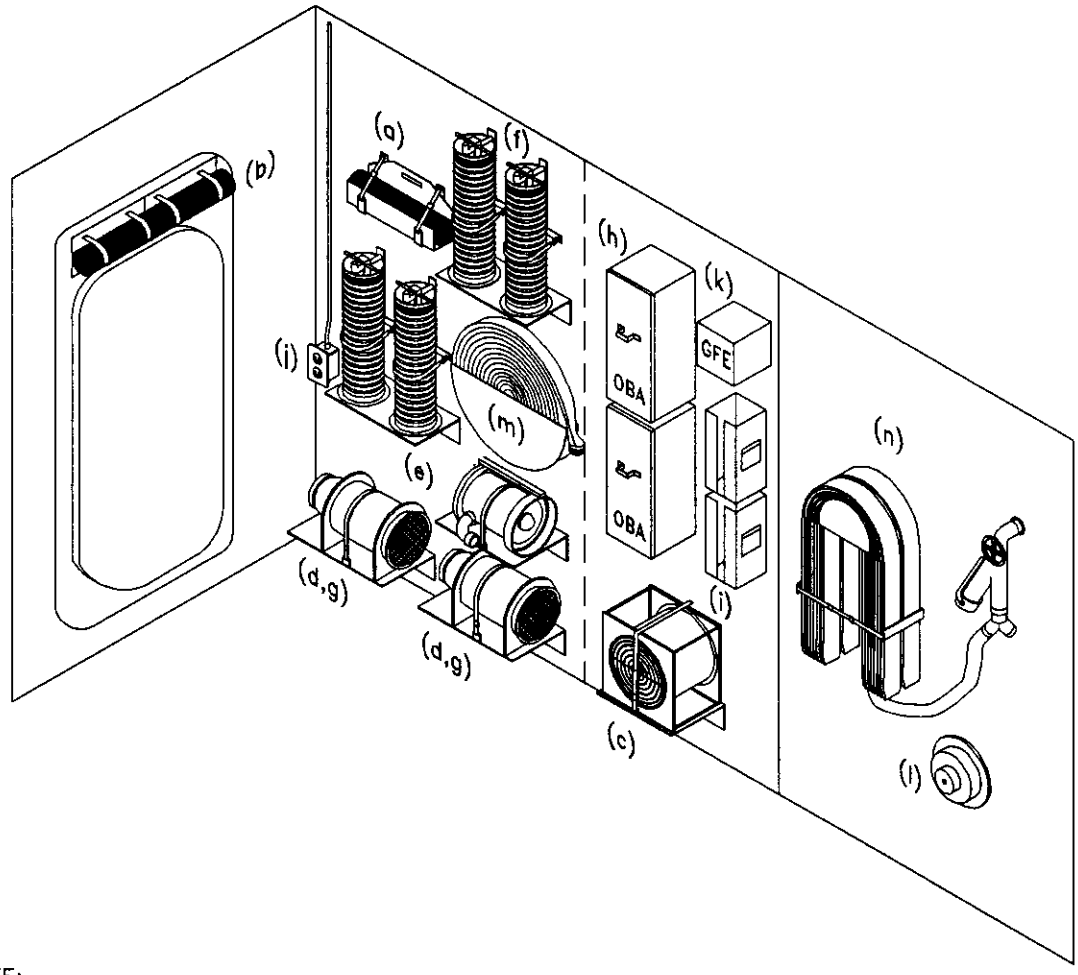

NOTE:

1. EQUIPMENT BRACKET FOUNDATIONS INSTALLED 6" ABOVE DECK.
2. HORIZONTAL DISTANCE BETWEEN EQUIPMENT APPROX. 4".
3. VERTICAL DISTANCE BETWEEN EQUIPMENT APPROX. 2".
4. TOTAL SPACE REQUIREMENTS – 72"W x 80"H x 20"D.

DAMAGE CONTROL EQUIPMENT STOWAGE SKETCH # 010

DESMOKING EQUIPMENT PLAN #2A

DCESS810

(a) 1 RACK – SMOKE CURTAIN
(b) 2 SMOKE CURTAINS PRE–HANG
(c) 1 FAN TUBEAXIAL 5200 CPFM
(d) 2 FAN VANEAXIAL (RED DEVIL)
(e) 1 RAM FAN, WATER DRIVEN
(f) 4 HOSE AIRDUCT
(g) 2 CABLE ASSEMBLY 25 Ft (STOWED, 1 EACH RED DEVIL)
(h) 2 OBA LOCKERS
(i) 1 CANISTER RACK
(j) 1 ELECTRICAL CONNECTION OUTLET
(k) 1 GAS FREE ENGINEERS EQUIPMENT STOWAGE
(l) 1 HOSE ASSEMBLY, 1–1/2" x 50'
(m) 1 OVERBOARD DISCHARGE
(n) 2 HOSE ASSEMBLY, 2–1/2" x 50'

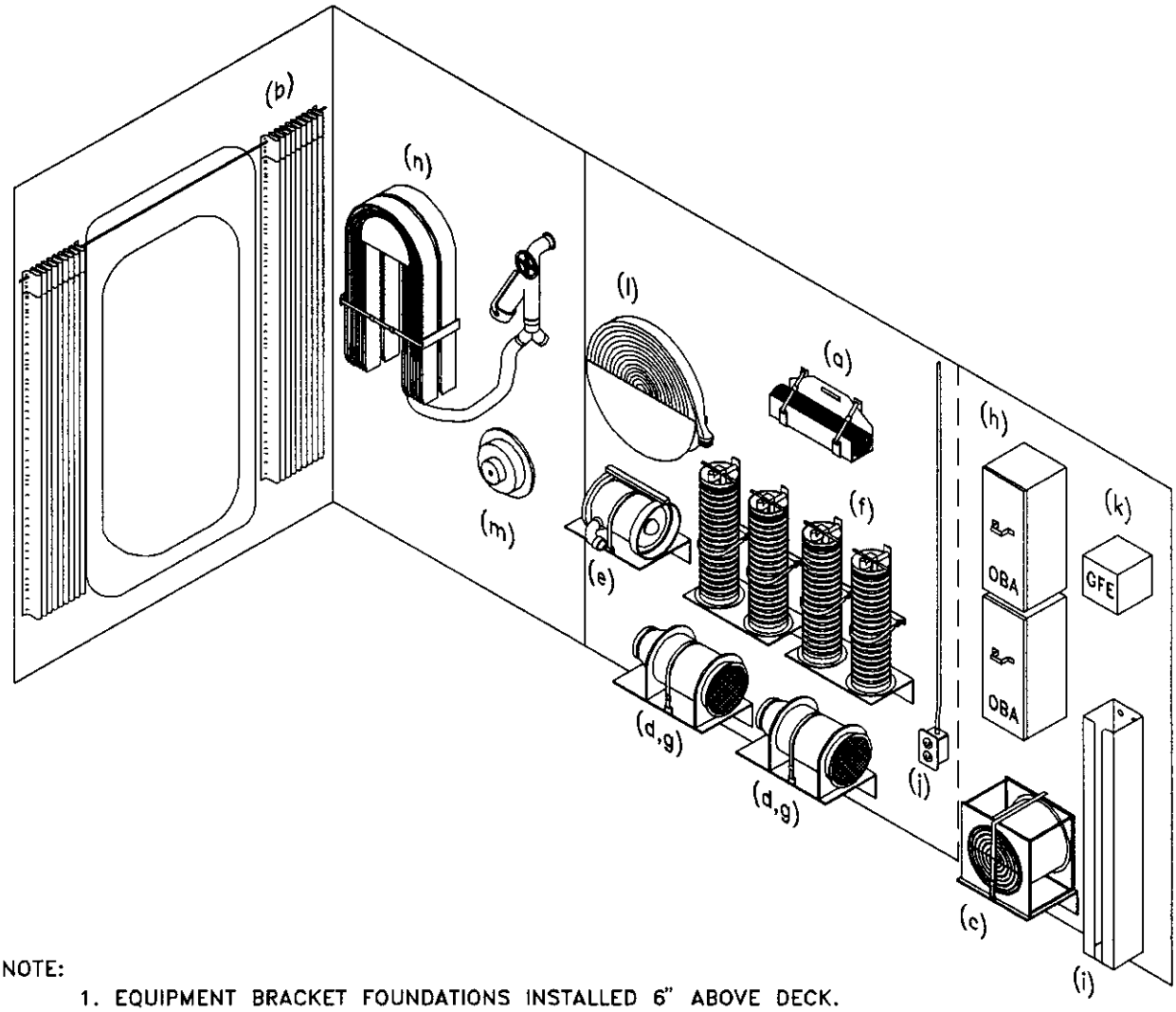

NOTE:

1. EQUIPMENT BRACKET FOUNDATIONS INSTALLED 6" ABOVE DECK.
2. HORIZONTAL DISTANCE BETWEEN EQUIPMENT APPROX. 4".
3. VERTICAL DISTANCE BETWEEN EQUIPMENT APPROX. 2".
4. TOTAL SPACE REQUIREMENTS – 72"W x 80"H x 20"D.

DAMAGE CONTROL EQUIPMENT STOWAGE SKETCH # 011

DESMOKING EQUIPMENT PLAN #2B

DCESS011

(a) 1 RACK – SMOKE CURTAIN
(b) 2 SMOKE CURTAINS PRE–HANG
(c) 1 FAN VANEAXIAL (RED DEVIL)
(d) 2 HOSE AIRDUCT
(e) 1 CABLE ASSEMBLY 25 Ft (STOWED, 1 EACH RED DEVIL)
(f) 2 OBA LOCKERS
(g) 2 CANISTER RACKS (6 PACK)
(h) 1 ELECTRICAL CONNECTION OUTLET
(i) 1 GAS FREE ENGINEERS EQUIPMENT STOWAGE
(j) 2 HOSE ASSEMBLY, 2–1/2" x 50'

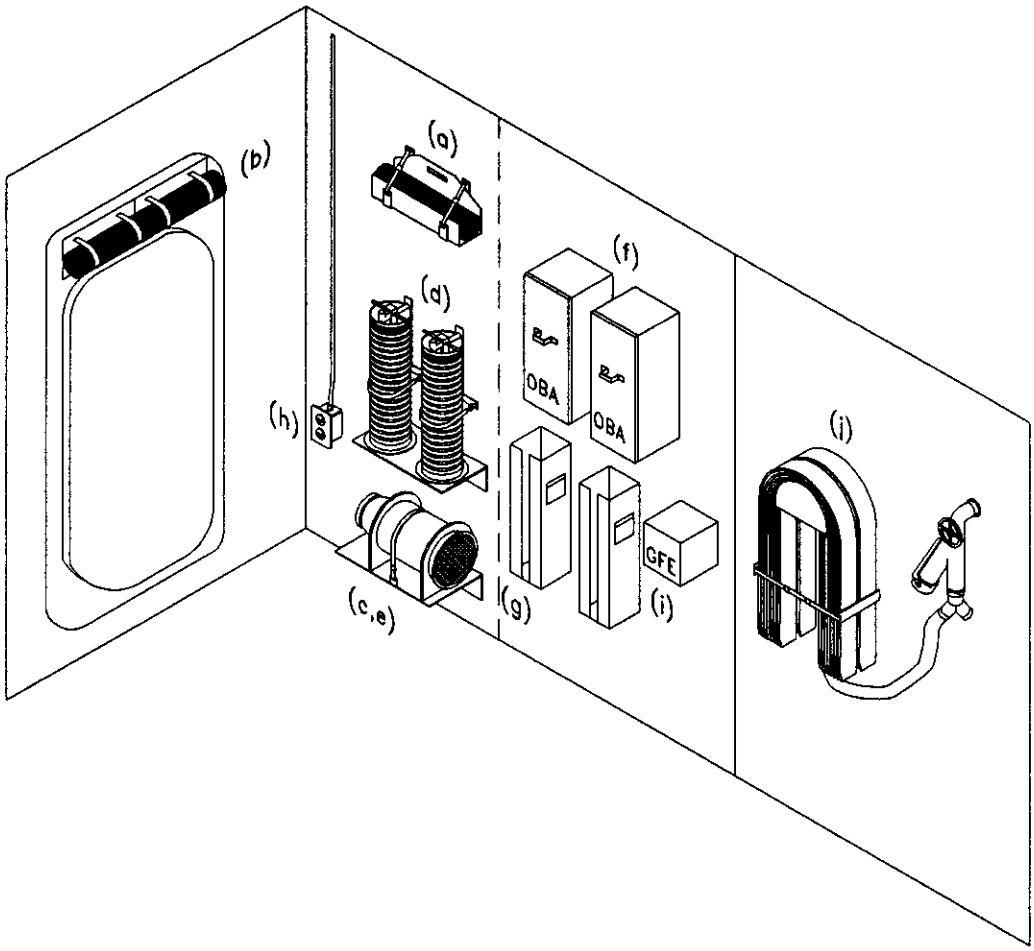

NOTE:

1. EQUIPMENT BRACKET FOUNDATIONS INSTALLED 6" ABOVE DECK.
2. HORIZONTAL DISTANCE BETWEEN EQUIPMENT APPROX. 4".
3. VERTICAL DISTANCE BETWEEN EQUIPMENT APPROX. 2".
4. TOTAL SPACE REQUIREMENTS – 60"W x 80"H x 20"D.

DAMAGE CONTROL EQUIPMENT STOWAGE SKETCH # 012

DESMOKING EQUIPMENT PLAN #2C

DCES5912

(a) 1 RACK – SMOKE CURTAIN
(b) 2 SMOKE CURTAINS PRE-HANG
(c) 2 FAN VANEAXIAL (RED DEVIL)
(d) 4 HOSE AIRDUCT
(e) 1 CABLE ASSEMBLY 25 Ft (STOWED ON RED DEVIL)
(f) 2 OBA LOCKERS
(g) 2 CANISTER RACKS (6 PACK)
(h) 1 ELECTRICAL CONNECTION OUTLET
(i) 1 GAS FREE ENGINEERS EQUIPMENT STOWAGE
(j) 2 HOSE ASSEMBLY, 2-1/2" x 50'

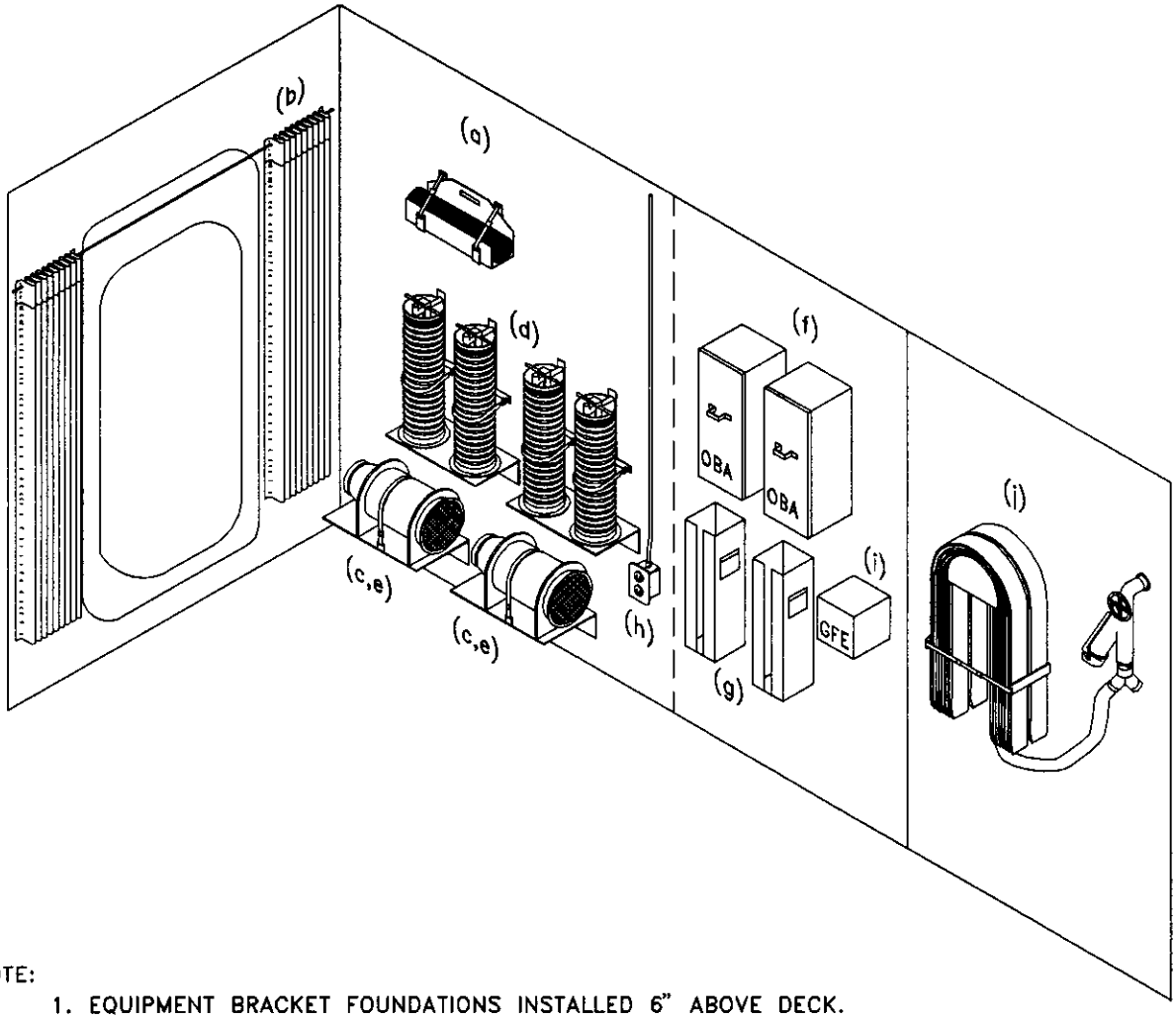

NOTE:

1. EQUIPMENT BRACKET FOUNDATIONS INSTALLED 6" ABOVE DECK.
2. HORIZONTAL DISTANCE BETWEEN EQUIPMENT APPROX. 4".
3. VERTICAL DISTANCE BETWEEN EQUIPMENT APPROX. 2".
4. TOTAL SPACE REQUIREMENTS – 60"W x 80"H x 20"D.

DAMAGE CONTROL EQUIPMENT STOWAGE SKETCH # 013

DESMOKING EQUIPMENT PLAN #2D

DCESSB13

(a) 1 RACK – SMOKE CURTAIN
(b) 2 SMOKE CURTAINS PRE-HANG
(c) 1 RAM FAN – WATER DRIVEN
(d) 2 HOSE AIRDUCT
(e) 2 OBA LOCKERS
(f) 2 CANISTER RACKS (6 PACK)
(g) 1 GAS FREE ENGINEERS STOWAGE
(h) 2 HOSE ASSEMBLY, 1-1/2" x 50'
(i) 1 OVERBOARD DISCHARGE
(j) 2 HOSE ASSEMBLY, 2-1/2" x 50'

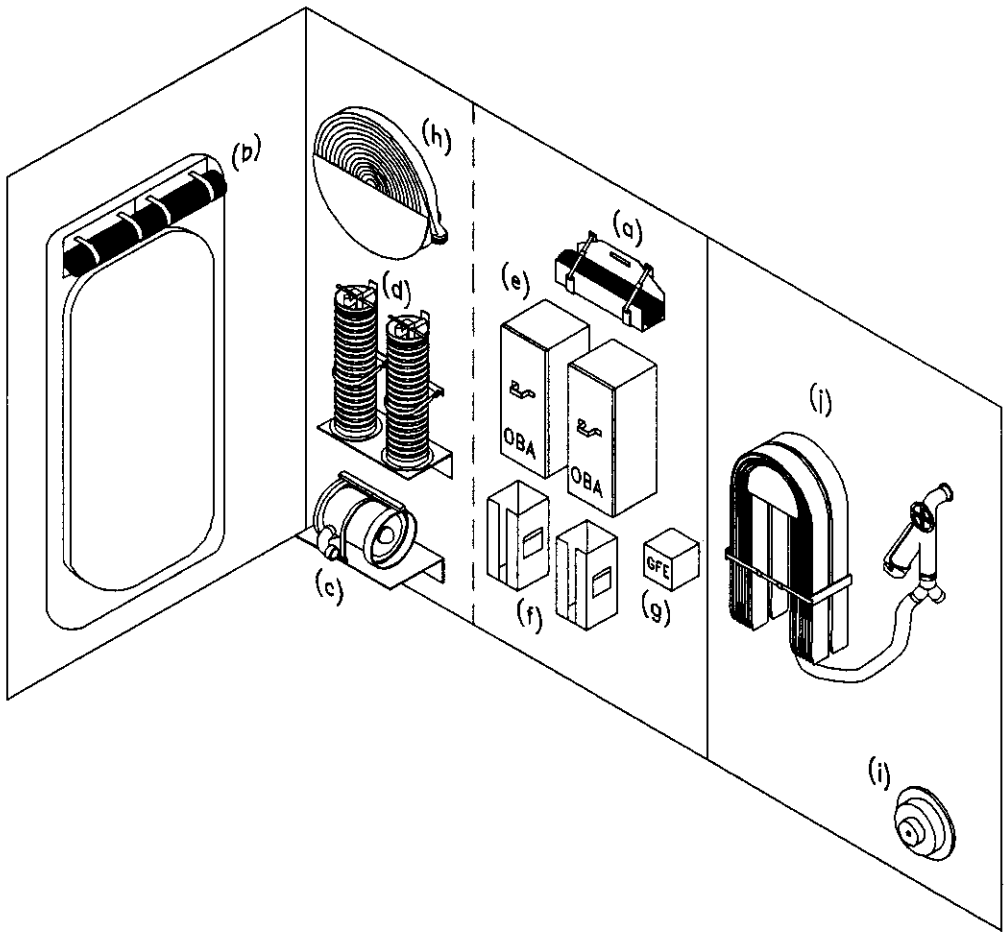

NOTE:

1. EQUIPMENT BRACKET FOUNDATIONS INSTALLED 6" ABOVE DECK.
2. HORIZONTAL DISTANCE BETWEEN EQUIPMENT APPROX. 4".
3. VERTICAL DISTANCE BETWEEN EQUIPMENT APPROX. 2".
4. TOTAL SPACE REQUIREMENTS – 60"W x 80"H x 20"D.

DAMAGE CONTROL EQUIPMENT STOWAGE SKETCH # 014

DESMOKING EQUIPMENT PLAN #2E

DCESSB14

(a) 1 RACK – SMOKE CURTAIN
(b) 2 SMOKE CURTAINS PRE-HANG
(c) 1 RAM FAN – WATER DRIVEN
(d) 2 HOSE AIRDUCT
(e) 2 OBA LOCKERS
(f) 2 CANISTER RACKS (6 PACK)
(g) 1 GAS FREE ENGINEERS STOWAGE
(h) 2 HOSE ASSEMBLY, 1-1/2" x 50'
(i) 1 OVERBOARD DISCHARGE
(j) 2 HOSE ASSEMBLY, 2-1/2" x 50'

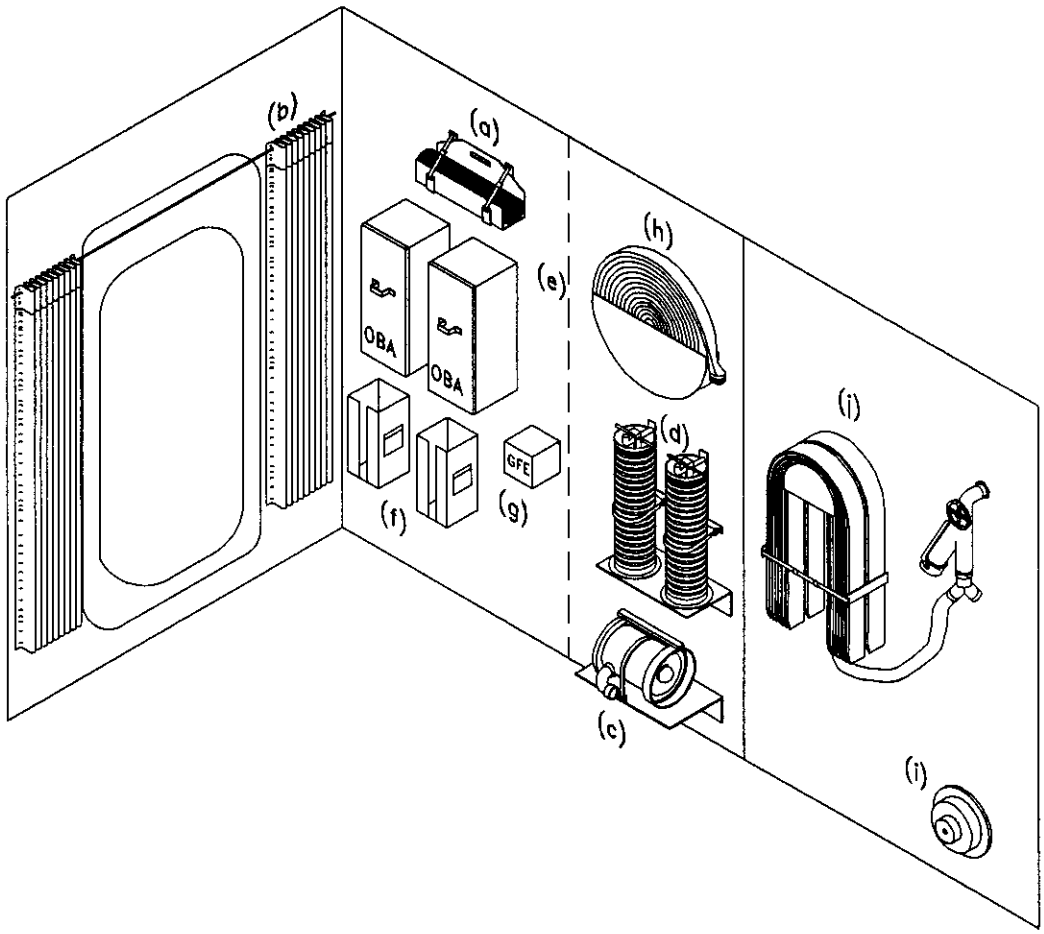

NOTE:

1. EQUIPMENT BRACKET FOUNDATIONS INSTALLED 6" ABOVE DECK.
2. HORIZONTAL DISTANCE BETWEEN EQUIPMENT APPROX. 4".
3. VERTICAL DISTANCE BETWEEN EQUIPMENT APPROX. 2".
4. TOTAL SPACE REQUIREMENTS – 60"W x 80"H x 20"D.

DAMAGE CONTROL EQUIPMENT STOWAGE SKETCH # 015

DESMOKING EQUIPMENT PLAN #2F

DCESS015

(a) 1 FAN TUBEAXIAL 5200 CPFM
(b) 1 FAN VANEAXIAL (RED DEVIL)
(c) 2 SMOKE CURTAINS PRE-HANG
(d) 2 HOSE AIRDUCT
(e) 2 OBA LOCKERS
(f) 2 CANISTER RACKS (6 PACK)
(g) 1 CABLE ASSEMBLY 25 Ft
(h) 1 GAS FREE ENGINEERS EQUIPMENT STOWAGE
(i) 1 ELECTRICAL CONNECTION OUTLET
(j) 2 HOSE ASSEMBLY, 2-1/2" x 50'

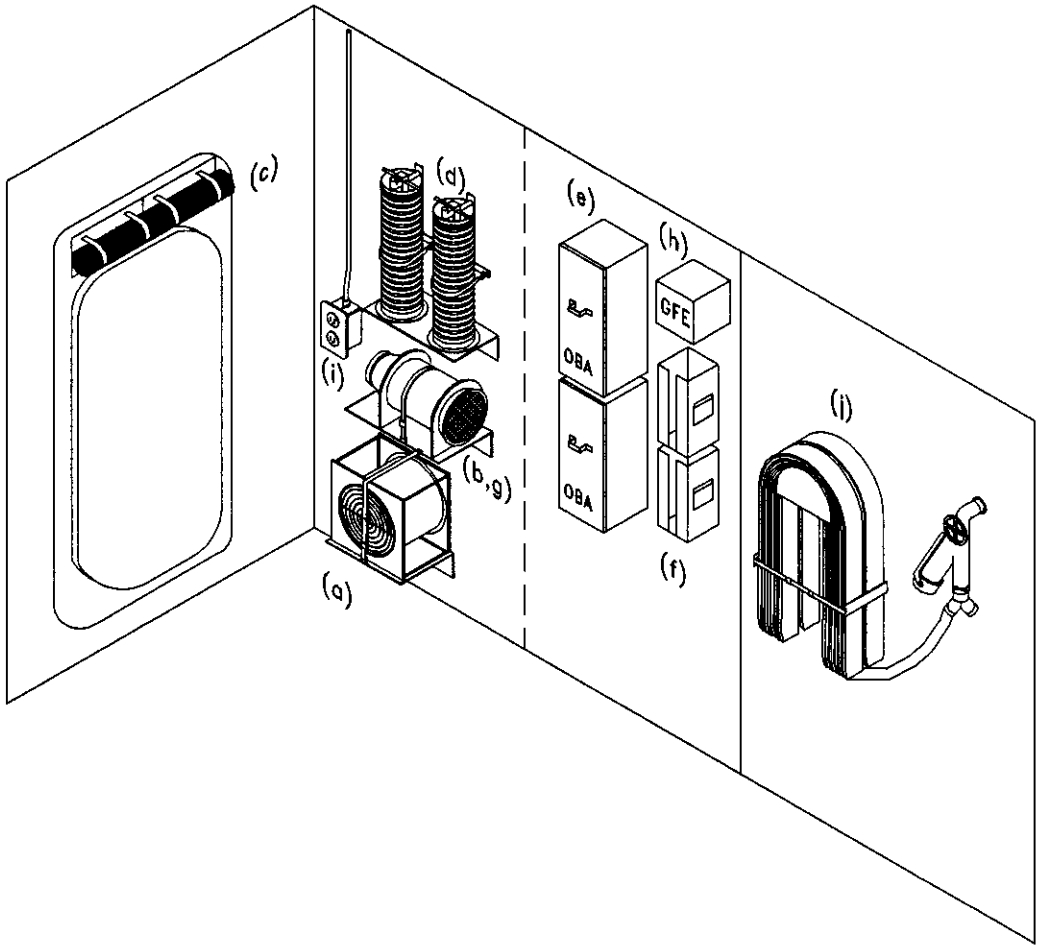

NOTE:

1. EQUIPMENT BRACKET FOUNDATIONS INSTALLED 6" ABOVE DECK.
2. HORIZONTAL DISTANCE BETWEEN EQUIPMENT APPROX. 4".
3. VERTICAL DISTANCE BETWEEN EQUIPMENT APPROX. 2".
4. TOTAL SPACE REQUIREMENTS - 60"W x 80"H x 20"D.

DAMAGE CONTROL EQUIPMENT STOWAGE SKETCH # 016

DESMOKING EQUIPMENT PLAN #2G

DCESS016

(a) 1 CAN, FUEL
(b) 1 EDUCTOR (PERI-JET)
(c) 1 HOSE ASSEMBLY 3" x 10'
(d) 1 HOSE ASSEMBLY 2" x 20'
(e) 1 HOSE ASSEMBLY 4" x 50'
(f) 1 HOSE ASSEMBLY 2-1/2" x 2-1/2' (STOWED WITH P250 PUMP)
(g) 2 HOSE ASSEMBLY 2-1/2" x 50'
(h) 1 HOSE ASSEMBLY 1-1/2" x 50'
(i) 1 PUMP - P250
(j) 1 VALVE - FOOT
(k) 1 ACCESSORIES CHEST
(l) 1 OVERBOARD DISCHARGE

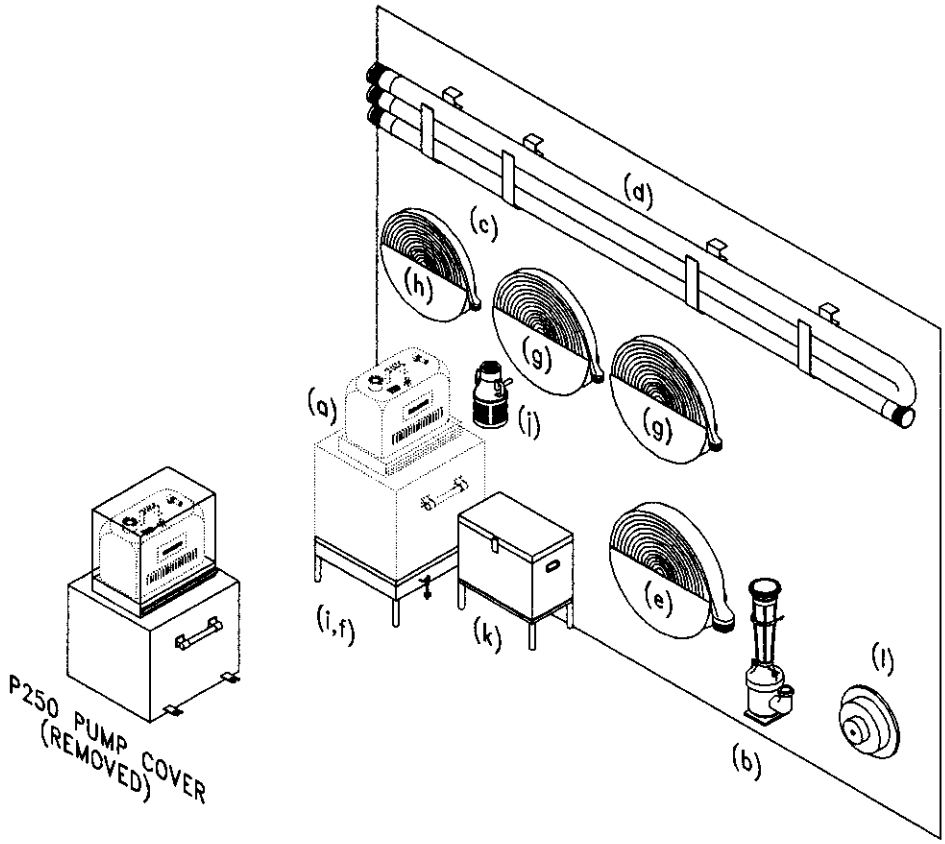

NOTE:

1. EQUIPMENT BRACKET FOUNDATIONS INSTALLED 6" ABOVE DECK.
2. HORIZONTAL DISTANCE BETWEEN EQUIPMENT APPROX. 4".
3. VERTICAL DISTANCE BETWEEN EQUIPMENT APPROX. 2".
4. TOTAL SPACE REQUIREMENTS - 76"W x 80"H x 21"D.

DAMAGE CONTROL EQUIPMENT STOWAGE SKETCH # 017

DEWATERING EQUIPMENT PLAN #3A
P250 PUMP AND ACCESSORIES

DCESS017

(a) 1 CAN, FUEL
(b) 1 EDUCTOR (PERI-JET)
(c) 1 HOSE ASSEMBLY 3" x 10'
(d) 1 HOSE ASSEMBLY 2" x 20'
(e) 1 HOSE ASSEMBLY 4" x 50'
(f) 1 HOSE ASSEMBLY 2-1/2" x 2-1/2' (STOWED WITH P250 PUMP)
(g) 2 HOSE ASSEMBLY 2-1/2" x 50'
(h) 1 HOSE ASSEMBLY 1-1/2" x 50'
(i) 1 PUMP - P250
(j) 1 VALVE - FOOT
(k) 1 ACCESSORIES CHEST
(l) 1 OVERBOARD DISCHARGE
(m) 1 P250 HOSE ASSEMBLY RACK

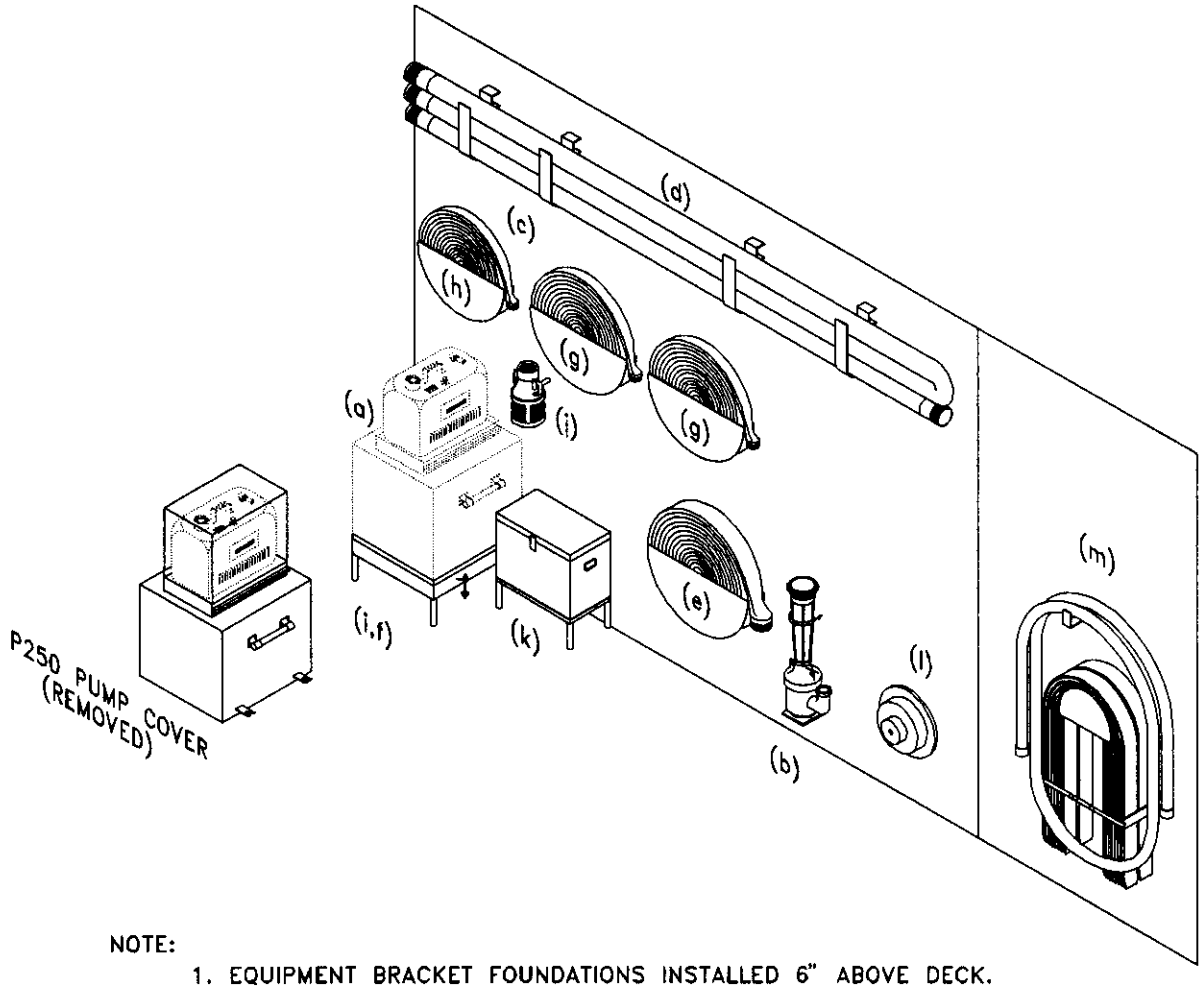

NOTE:

1. EQUIPMENT BRACKET FOUNDATIONS INSTALLED 6" ABOVE DECK.
2. HORIZONTAL DISTANCE BETWEEN EQUIPMENT APPROX. 4".
3. VERTICAL DISTANCE BETWEEN EQUIPMENT APPROX. 2".
4. TOTAL SPACE REQUIREMENTS - 76"W x 80"H x 21"D.

DAMAGE CONTROL EQUIPMENT STOWAGE SKETCH # 018

DEWATERING EQUIPMENT PLAN #3B
P250 PUMP AND ACCESSORIES

DCESS018

(a) 1 CAN, FUEL (STOWED WITH PUMP P250)
(b) 1 EDUCTOR (PERI-JET)
(c) 1 HOSE ASSEMBLY 3" x 10'
(d) 1 HOSE ASSEMBLY 2" x 20'
(e) 1 HOSE ASSEMBLY 4" x 50'
(f) 1 HOSE ASSEMBLY 2-1/2" x 2-1/2' (STOWED WITH PUMP P250)
(g) 2 HOSE ASSEMBLY 2-1/2" x 50'
(h) 1 HOSE ASSEMBLY 1-1/2" x 50'
(i) 1 PUMP - P250
(j) 1 VALVE - FOOT (STOWED WITH PUMP P250)
(k) 1 ACCESSORIES CHEST
(j) 1 TRI-GATE CONNECTION (STOWED WITH PUMP P250)
(m) 1 OVERBOARD DISCHARGE CONNECTION

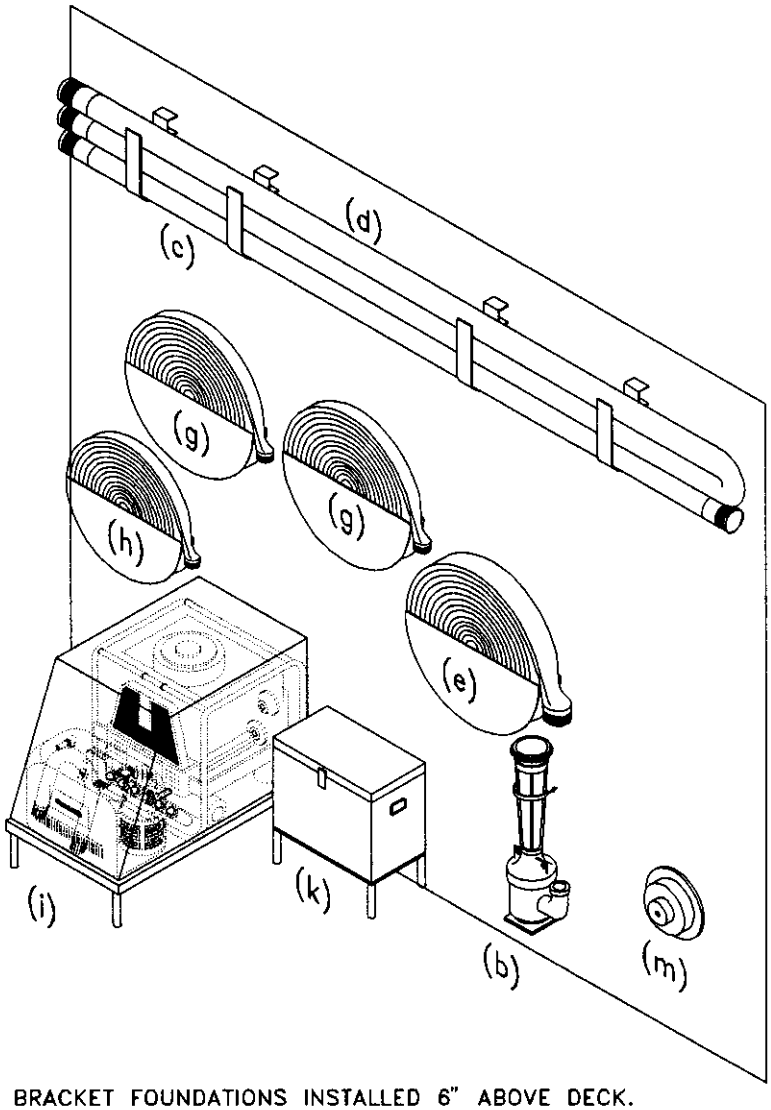

NOTE:

1. EQUIPMENT BRACKET FOUNDATIONS INSTALLED 6" ABOVE DECK.
2. HORIZONTAL DISTANCE BETWEEN EQUIPMENT IS 4".
3. VERTICAL DISTANCE BETWEEN EQUIPMENT IS 2".
4. TOTAL SPACE REQUIREMENTS - 76"W x 80"H x 21"D.

DAMAGE CONTROL EQUIPMENT STOWAGE SKETCH # 019

DEWATERING EQUIPMENT PLAN #3C
P250 PUMP AND ACCESSORIES

DCESS019

(a) 1 PUMP, SUBMERSIBLE
(b) 1 CABLE ASSEMLY, 50' (ATTACHED TO SUB-PUMP)
(c) 2 HOSE ASSEMBLY 1-1/2" x 50' (DOUBLE RACK)
(d) 2 HOSE ASSEMBLY 2-1/2" x 10'(STOWED WITH P250 HOSE ASSY)
(e) 2 HOSE ASSEMBLY 2-1/2" x 50'
(f) 1 ROPE, NYLON 2" x 50' (ATTACHED TO SUB-PUMP)
(g) 1 EDUCTOR 2-1/2" DISCHARGE
(h) 1 STRAINER, SUCTION FIREHOSE (ATTACHED TO 2-1/2" HARD RUBBER HOSE)
(i) 1 WRENCH SPANNER 2" TO 4-3/4"
(j) 1 WRENCH SPANNER 3/4" TO 2"
(k) 1 OVERBOARD DISCHARGE
(l) 1 HOSE ASSEMBLY 4" x 50'
(m) 1 EDUCTOR 4" DISCHARGE (PERI-JET)
(n) 1 CASUALTY POWER CABLE
(o) 1 CASUALTY POWER CONNECTION
(p) 1 ADAPTER DBLM 4"

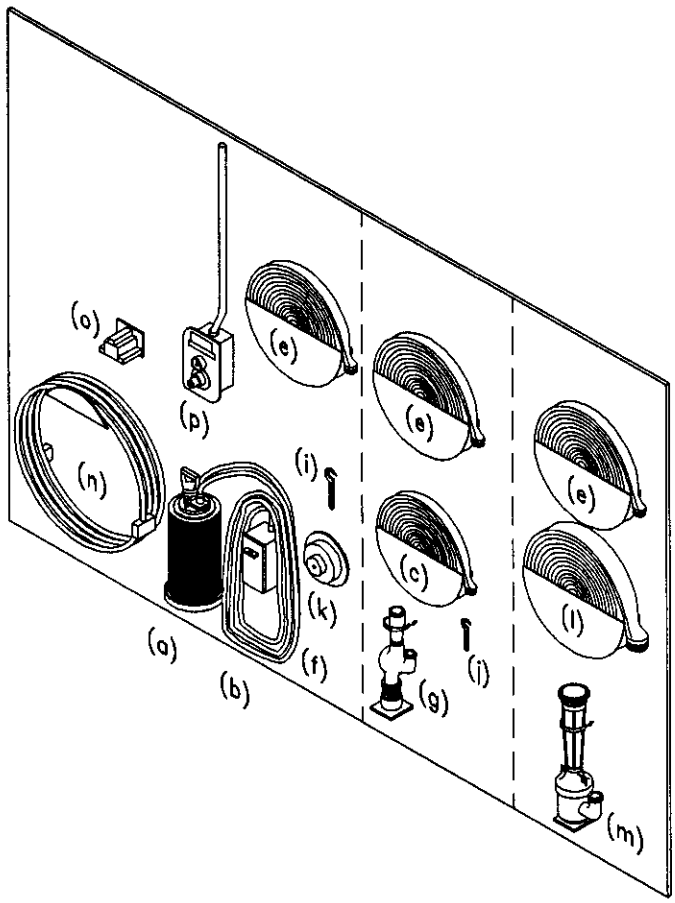

NOTE:

1. EQUIPMENT BRACKET FOUNDATIONS INSTALLED 6" ABOVE DECK.
2. HORIZONTAL DISTANCE BETWEEN EQUIPMENT APPROX. 4".
3. VERTICAL DISTANCE BETWEEN EQUIPMENT APPROX. 2".
4. TOTAL SPACE REQUIREMENTS - 76"W x 66"H x 21"D.

DAMAGE CONTROL EQUIPMENT STOWAGE SKETCH # 020

DEWATERING EQUIPMENT PLAN #3D

DCESS820

(a) 1 PUMP, SUBMERSIBLE
(b) 1 CABLE ASSEMLY, 50' (ATTACHED TO SUB-PUMP)
(c) 2 HOSE ASSEMBLY 1-1/2" x 50' (DOUBLE RACK)
(d) 2 HOSE ASSEMBLY 2-1/2" x 10'(STOWED WITH P250 HOSE ASSY)
(e) 2 HOSE ASSEMBLY 2-1/2" x 50'
(f) 1 ROPE, NYLON 2" x 50' (ATTACHED TO SUB-PUMP)
(g) 1 EDUCTOR 2-1/2" DISCHARGE
(h) 1 STRAINER, SUCTION FIREHOSE (ATTACHED TO 2-1/2" HARD RUBBER HOSE)
(i) 1 WRENCH SPANNER 2" TO 4-3/4"
(j) 1 WRENCH SPANNER 3/4" TO 2"
(k) 1 OVERBOARD DISCHARGE
(l) 1 CASUALTY POWER CABLE
(m) 1 CASUALTY POWER CONNECTION
(n) 1 ADAPTER DBLM 4"

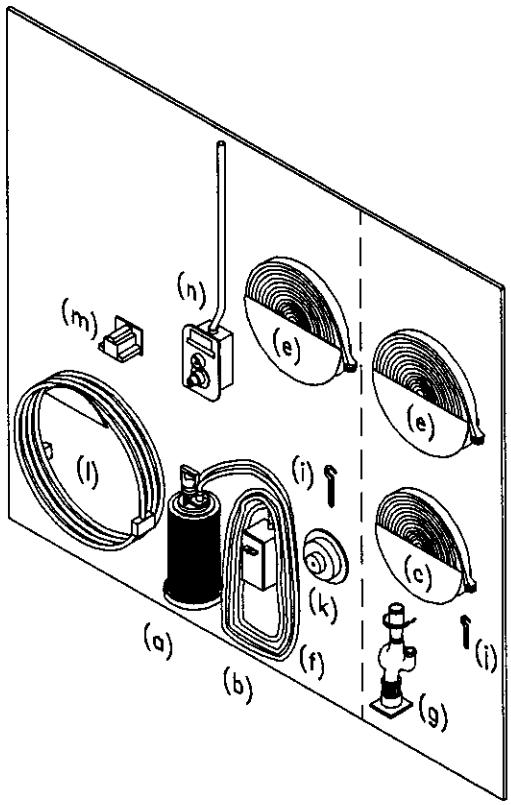

NOTE:

1. EQUIPMENT BRACKET FOUNDATIONS INSTALLED 6" ABOVE DECK.
2. HORIZONTAL DISTANCE BETWEEN EQUIPMENT APPROX. 4".
3. VERTICAL DISTANCE BETWEEN EQUIPMENT APPROX. 2".
4. TOTAL SPACE REQUIREMENTS - 76"W x 66"H x 21"D.

DAMAGE CONTROL EQUIPMENT STOWAGE SKETCH # 021

DEWATERING EQUIPMENT PLAN #3E

DCESS021

(a) 1 PUMP, SUBMERSIBLE
(b) 1 CABLE ASSEMLY, 50' (ATTACHED TO SUB-PUMP)
(c) 1 HOSE ASSEMBLY 4" x 50'
(d) 2 HOSE ASSEMBLY 2-1/2" x 10'(STOWED WITH P250 HOSE ASSY)
(e) 2 HOSE ASSEMBLY 2-1/2" x 50'
(f) 1 ROPE, NYLON 2" x 50' (ATTACHED TO SUB-PUMP)
(g) 1 EDUCTOR 4" DISCHARGE (PERI-JET)
(h) 1 STRAINER, SUCTION FIREHOSE (ATTACHED TO 2-1/2" HARD RUBBER HOSE)
(i) 1 WRENCH SPANNER 2" TO 4-3/4"
(j) 1 WRENCH SPANNER 3/4" TO 2"
(k) 1 OVERBOARD DISCHARGE
(l) 1 ADAPTER DBLM 4"
(m) 1 CASUALTY POWER CABLE
(n) 1 CASUALTY POWER CONNECTION

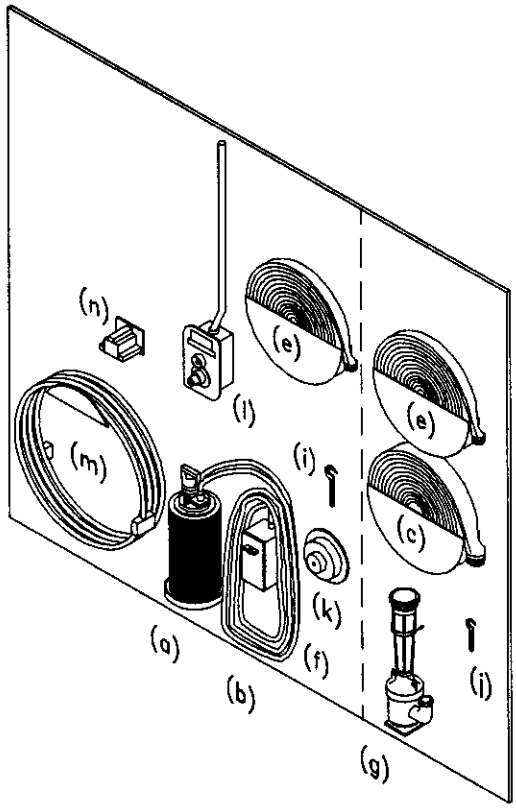

NOTE:

1. EQUIPMENT BRACKET FOUNDATIONS INSTALLED 6" ABOVE DECK.
2. HORIZONTAL DISTANCE BETWEEN EQUIPMENT APPROX. 4".
3. VERTICAL DISTANCE BETWEEN EQUIPMENT APPROX. 2".
4. TOTAL SPACE REQUIREMENTS - 76"W x 60"H x 21"D.

DAMAGE CONTROL EQUIPMENT STOWAGE SKETCH # 022

DEWATERING EQUIPMENT PLAN #3F

DCESSB22

(a) 1 EDUCTOR 4" DISCHARGE (PERI-JET)
(b) 1 EDUCTOR 2-1/2" DISCHARGE
(c) 1 HOSE ASSEMBLY 1-1/2" x 50'
(d) 1 HOSE ASSEMBLY 4" x 50'
(e) 2 HOSE ASSEMBLY 2-1/2" x 50'
(f) 1 OVERBOARD DISCHARGE
(g) 1 WRENCH SPANNER 2" x 4-3/4"
(h) 1 WRENCH SPANNER 3/4" x 2"
(i) 1 FIRE PLUG, 1-1/2"
(j) 2 HOSE ASSEMBLY, 1-1/2" x 50'

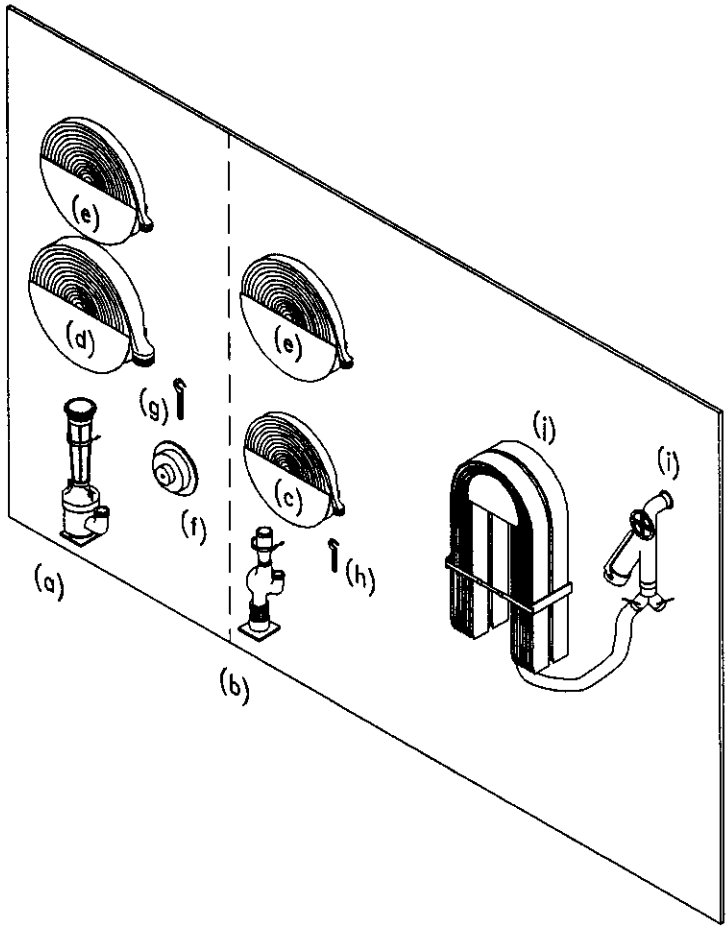

NOTE:

1. EQUIPMENT BRACKET FOUNDATIONS INSTALLED 6" ABOVE DECK.
2. HORIZONTAL DISTANCE BETWEEN EQUIPMENT APPROX. 4".
3. VERTICAL DISTANCE BETWEEN EQUIPMENT APPROX. 2".
4. TOTAL SPACE REQUIREMENTS - 76"W x 66"H x 21"D.

DAMAGE CONTROL EQUIPMENT STOWAGE SKETCH # 023

DEWATERING EQUIPMENT PLAN #3G

DCES5823

(a) 1 EDUCTOR 4" DISCHARGE (PERI-JET)
(b) 1 EDUCTOR 2-1/2" DISCHARGE
(c) 2 HOSE ASSEMBLY 1-1/2" x 50'
(d) 1 HOSE ASSEMBLY 4" x 50'
(e) 2 HOSE ASSEMBLY 2-1/2" x 50'
(f) 1 OVERBOARD DISCHARGE
(g) 1 WRENCH SPANNER 2" x 4-3/4"
(h) 1 WRENCH SPANNER 3/4" x 2"
(i) 1 RAM FAN, WATER DRIVEN
(j) 2 HOSE AIRDUCT
(k) 1 FIRE PLUG, 1-1/2"
(l) 2 HOSE ASSEMBLY, 1-1/2" x 50'

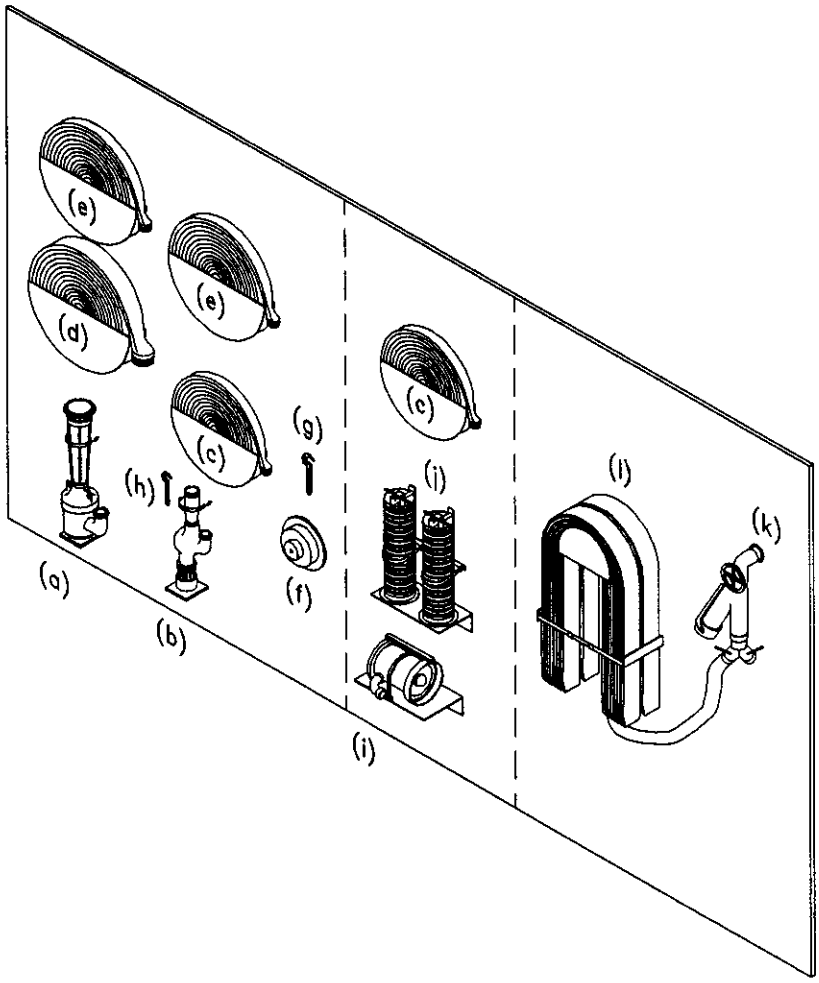

NOTE:

1. EQUIPMENT BRACKET FOUNDATIONS INSTALLED 6" ABOVE DECK.
2. HORIZONTAL DISTANCE BETWEEN EQUIPMENT APPROX. 4".
3. VERTICAL DISTANCE BETWEEN EQUIPMENT APPROX. 2".
4. TOTAL SPACE REQUIREMENTS – 76"W x 66"H x 21"D.

DAMAGE CONTROL EQUIPMENT STOWAGE SKETCH # 024

DEWATERING EQUIPMENT PLAN #3H

DCESSB24

(a) 6 FIREMAN'S BAG

EACH BAG CONTAINS:

1 PAIR BOOTS
1 PAIR GLOVES
1 OBA
2 OBA CANS
1 FF COVERALL
1 FF HELMET

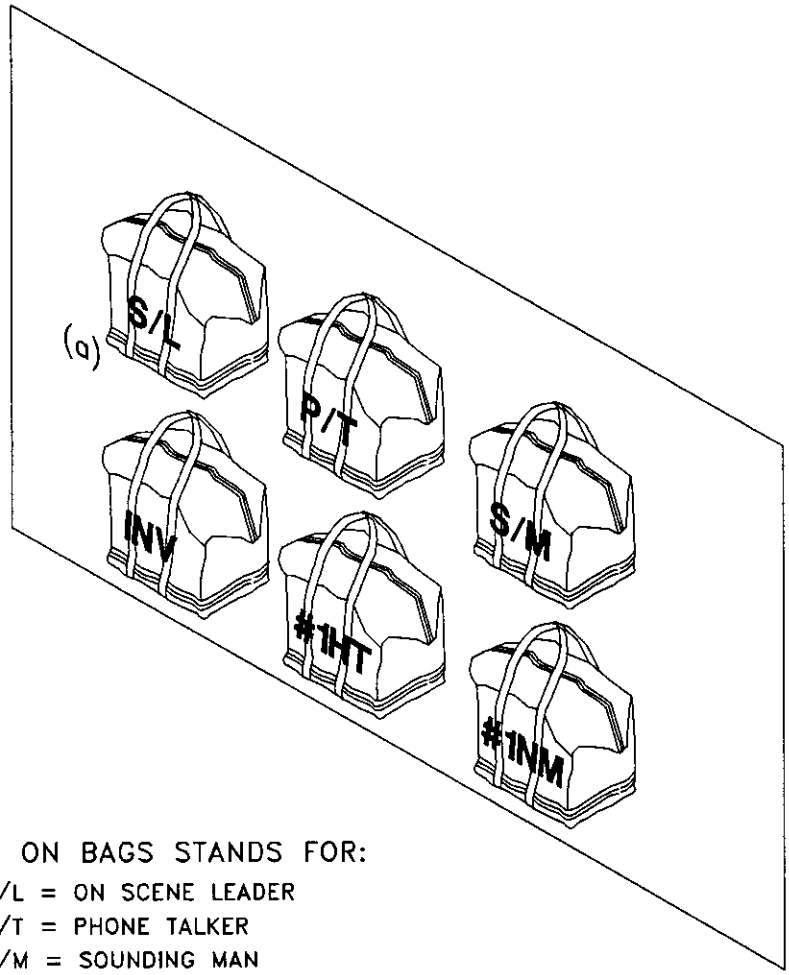

LETTERS ON BAGS STANDS FOR:

S/L = ON SCENE LEADER
P/T = PHONE TALKER
S/M = SOUNDING MAN
INV = INVESTIGATOR
#1HT = NO.1 HOSE TEAM
#1NM = NO.1 NOZZLE MAN

DAMAGE CONTROL EQUIPMENT STOWAGE SKETCH # 25

PERSONNEL PROTECTION EQUIPMENT STOWAGE BAG

DCESSB25

EQUIPMENT DESCRIPTION	DIMENSIONS
1. Cutter	31½"H x 11½"W x 7"D
2. Spreader	24.3"H x 14"W x 8½"D
3. Extension Ram	23"H x 7"W x 3"D
4. Engine	22"H x 20"W x 20"D
5. Attachment Case	11"H x 15⅜"W x 3"D
6. Hose Reel - 100' with Manifold attached to hose	18"H x 16½"W x 16½"D
7. Extension Hose, 1 x 16'	24"H x 18"W x 3"D
8. Multiple Connection Manifold	15"H x 9½"W x 5"D
9. Funnel	8"H x 4"W x 4"D
10. Oil, case - 7 quarts (1 quart illustrated)	

NOTES: 1. Spare hydraulic fluid (7 qts.) stored as designated by DCA.
2. Illustration is for general storage guidance only.

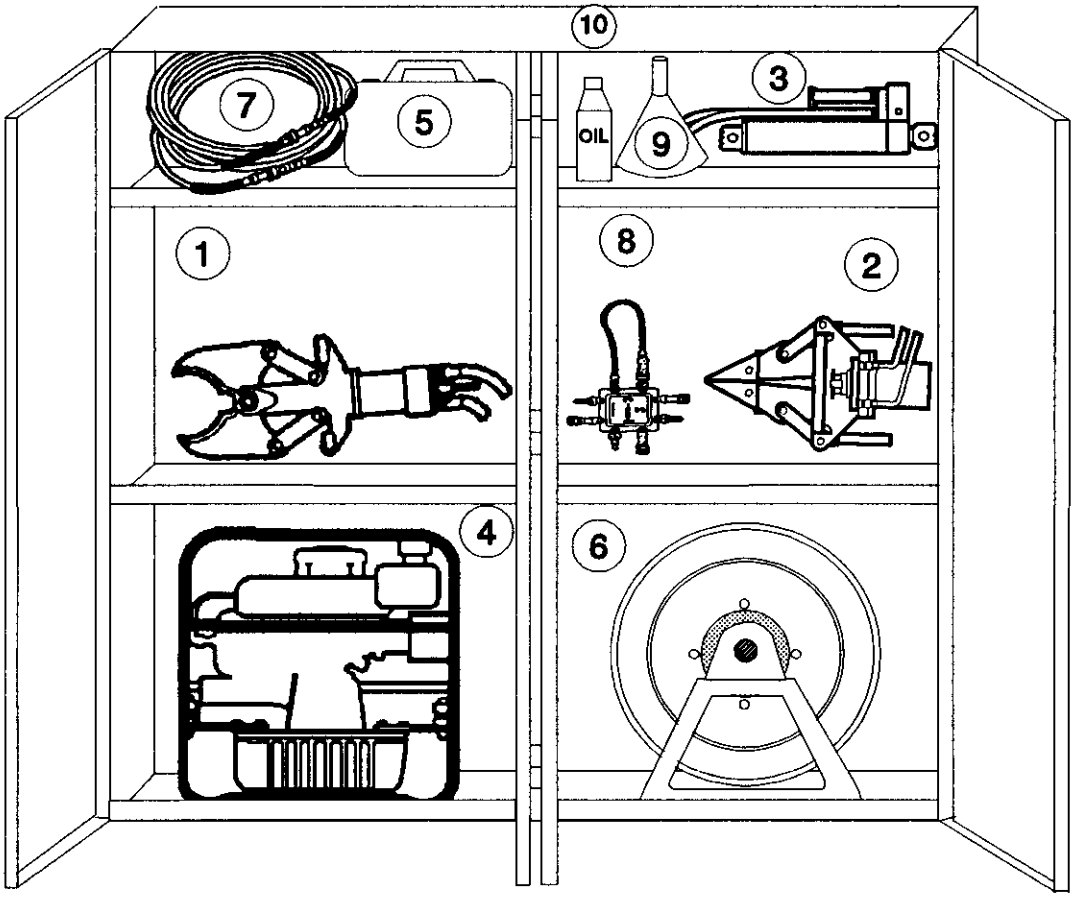

DAMAGE CONTROL EQUIPMENT STOWAGE SKETCH #025

PORTABLE HYDRAULIC ACCESS AND RESCUE SYSTEM (PHARS)

GENERAL EQUIPMENT STORAGE ARRANGEMENT PLAN #1

HURST TOOLS

EQUIPMENT DESCRIPTION	DIMENSIONS
1. Cutter	21"L x 8"W x 5"H
2. Spreader	31"L x 13"W x 8"H
3. Extension Ram	25"L x 7"W x 3"H
4. Engine	22"L x 20"W x 20"H
5. Hose Reel - 100' with Manifold attached to hose (optional)	21"L x 18"W x 18"H
6. Extension Hose, 1 x 15'	24"L x 16"W x 3"H
7. Funnel	8"L x 4"W x 4"H
8. Oil, case - 7 quarts (1 quart illustrated)	

NOTES:
1. Spare hydraulic fluid (7 qts.) stored as designated by DCA.
2. Illustration is for general storage guidance only.

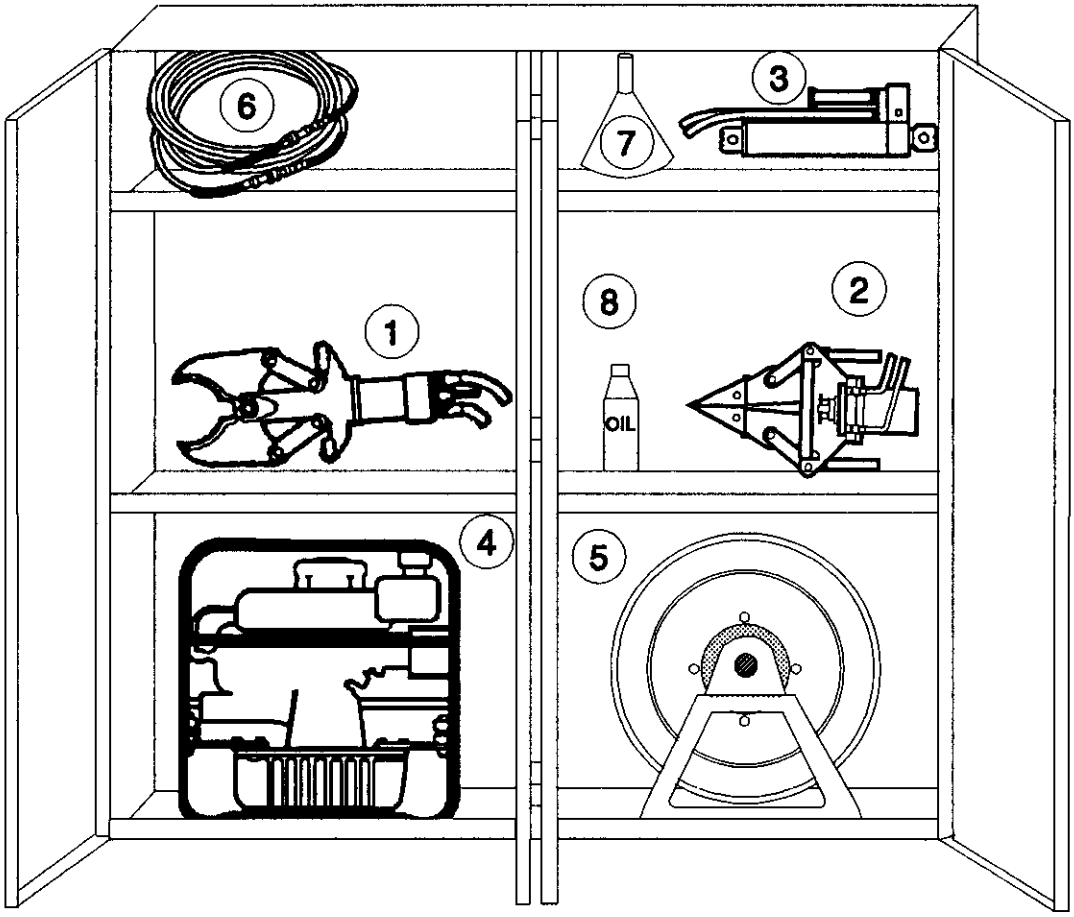

DAMAGE CONTROL EQUIPMENT STOWAGE SKETCH #026

PORTABLE HYDRAULIC ACCESS AND RESCUE SYSTEM (PHARS)

GENERAL EQUIPMENT STORAGE ARRANGEMENT PLAN #2

PHOENIX TOOLS

EQUIPMENT DESCRIPTION	DIMENSIONS
1. Cutter	30.75"L x 8.75"W x 5"H
2. Spreader	35"L x 12"W x 8.5"H
3. Extension Ram	30.25"L x 4.75"W x 17"H
4. Engine	21"L x 16"W x 22"H
5. Accessories Chest	36"L x 16"W x 18"H
6. Hose Reel - 100′	16.5"L x 14"W x 18"H
7. Extension Hose, 1 x 16′	24"L x 18"W x 3"H
8. Foot Valve	30"L x 10"W x 5"H
9. Funnel	8"L x 4"W x 4"H
10. Oil, case - 7 quarts (1 quart illustrated)	

NOTES: 1. Spare hydraulic fluid (7 qts.) stored as designated by DCA.
2. Illustration is for general storage guidance only.

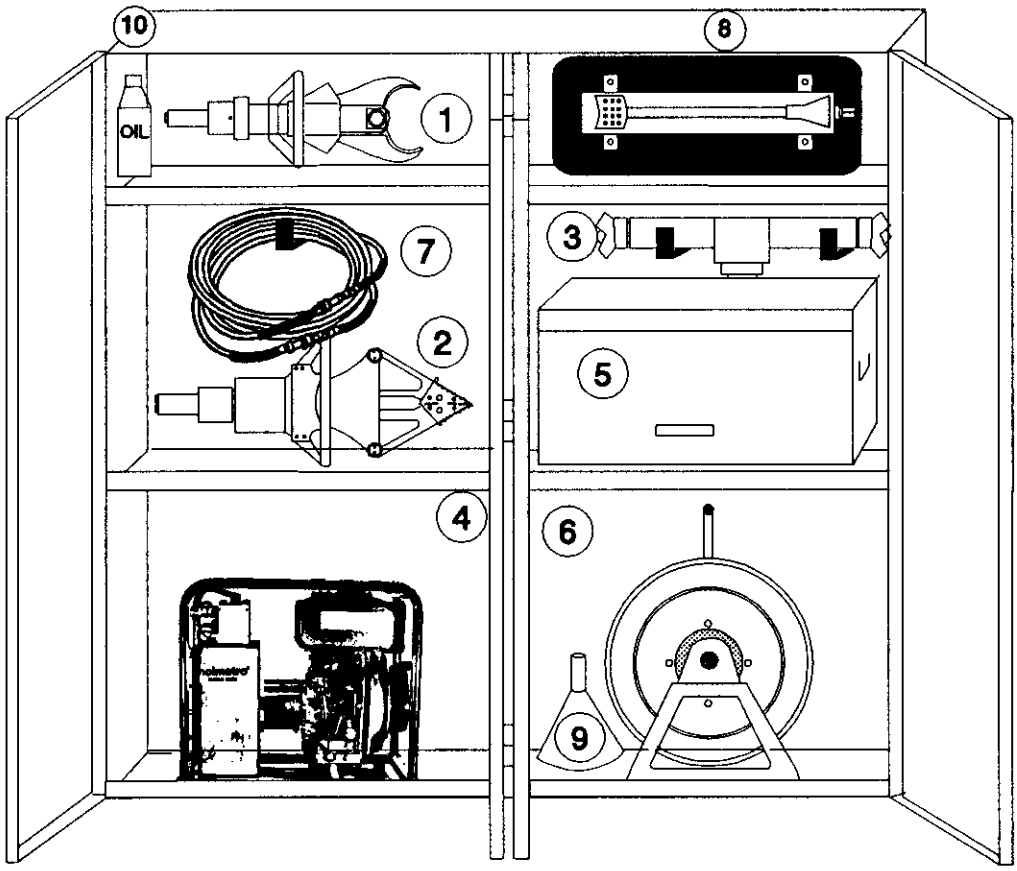

DAMAGE CONTROL EQUIPMENT STOWAGE SKETCH #027

PORTABLE HYDRAULIC ACCESS AND RESCUE SYSTEM (PHARS)

GENERAL EQUIPMENT STORAGE ARRANGEMENT PLAN #3

HOLMATRO TOOLS

EQUIPMENT DESCRIPTION	DIMENSIONS
1. Cutter	30.75"L x 8.75"W x 5"H
2. Spreader	35"L x 12"W x 8.5"H
3. Extension Ram	30.25"L x 4.75"W x 17"H
4. Engine	21"L x 16"W x 22"H
5. Accessories Chest with Extension Hose, 1 x 16′	36"L x 16"W x 18"H
6. Hose Reel - 100′	16.5"L x 14"W x 18"H
7. Foot Valve	30"L x 10"W x 5"H

NOTES: 1. Spare hydraulic fluid (7 qts.) stored as designated by DCA.
2. Illustration is for general storage guidance only.

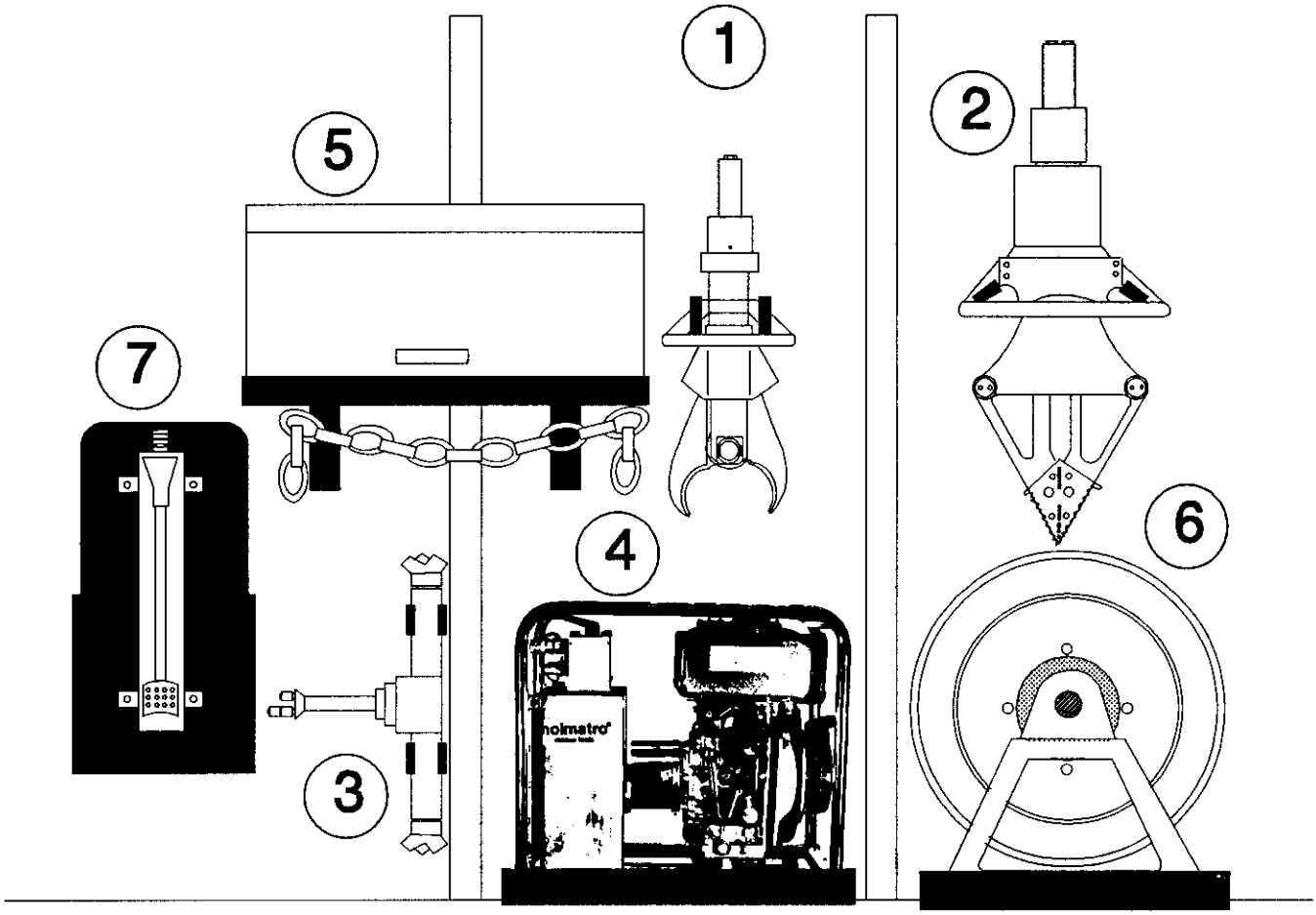

DAMAGE CONTROL EQUIPMENT STOWAGE SKETCH #028

PORTABLE HYDRAULIC ACCESS AND RESCUE SYSTEM (PHARS)

GENERAL EQUIPMENT STORAGE ARRANGEMENT PLAN #3A

HOLMATRO TOOLS

NEW SKETCH

(a) CBR-D IPE STOWAGE RACK
(b) CBR-D IPE KIT
1 BAG, CBR-D IPE KIT
1 JS-LIST COAT
1 JS-LIST TROUSERS
1 PAIR OVERBOOTS
2 PAIR GLOVE INSERTS
1 UTILITY BELT
1 CANTEEN
1 M-291 DECON KIT
2 C1A2 CANISTERS
2 2PAM CHLORIDE AUTO INJECTORS
3 ATROPINE AUTO INJECTORS

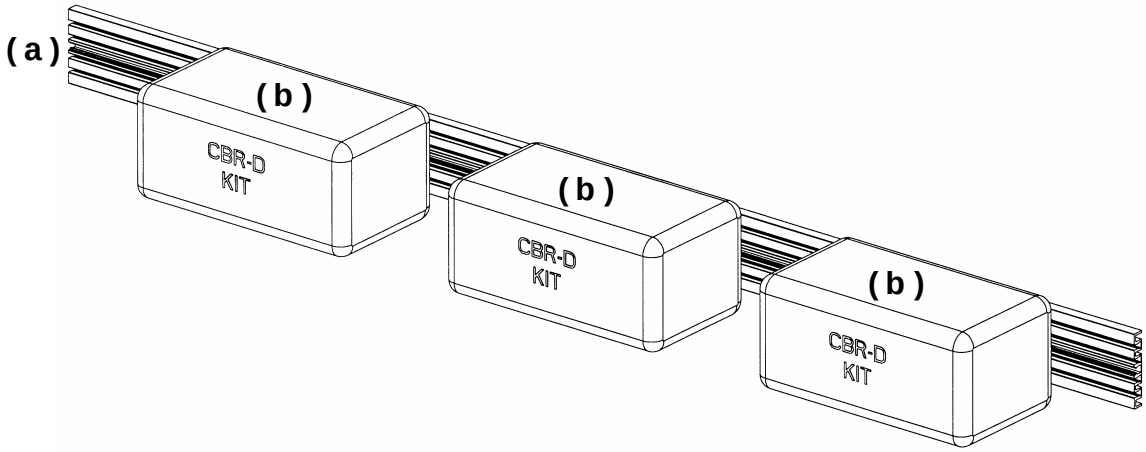

NOTE: 1. CBR RACK SYSTEM SHOWN IN A HORIZONTAL CONFIGURATION.

2. CBR-D IPE KITS ARE STORED ON RACK SYSTEMS. THE LENGTH OF THE RACK DETERMINES THE NUMBER OF CBR-D IPE KITS THAT CAN BE STORED ON EACH ROW.

DAMAGE CONTROL EQUIPMENT STOWAGE SKETCH #029

CBR-D IPE STOWAGE RACK SYSTEM

NEW SKETCH

(a) 1 MCU-2P KIT INCLUDES:
1 BAG, MCU-2P KIT
1 MCU-2P MASK
(b) 1 MCU-2P STOWAGE HOOK
(c) BERTHING

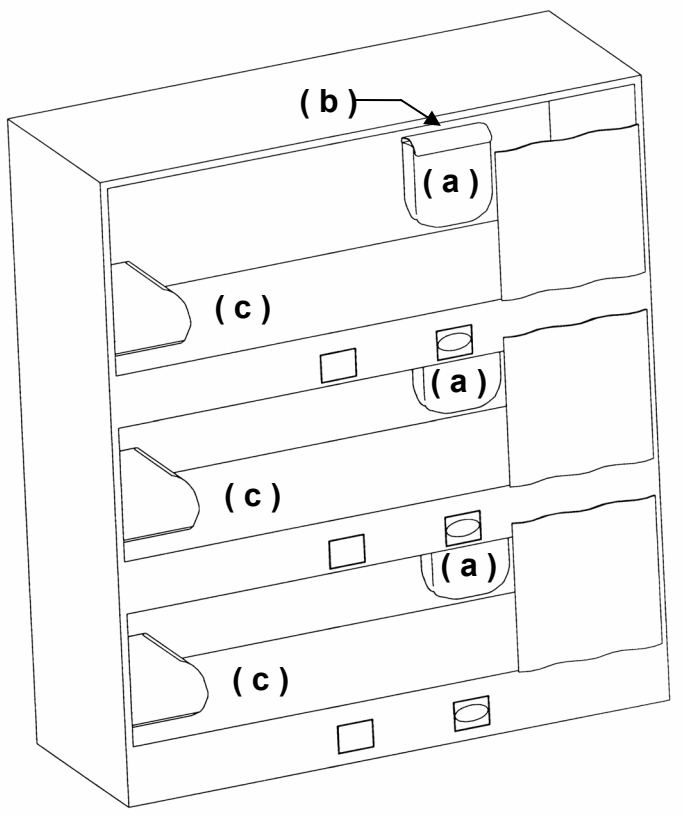

DAMAGE CONTROL EQUIPMENT STOWAGE SKETCH #030

MCU-2P STOWAGE PLAN

BERTHING AREA

NEW SKETCH

(a) 1 MCU-2P KIT INCLUDES:
1 BAG, MCU-2P KIT
1 MCU-2P MASK
(b) 1 MCU-2P STOWAGE HOOK
(c) DESK

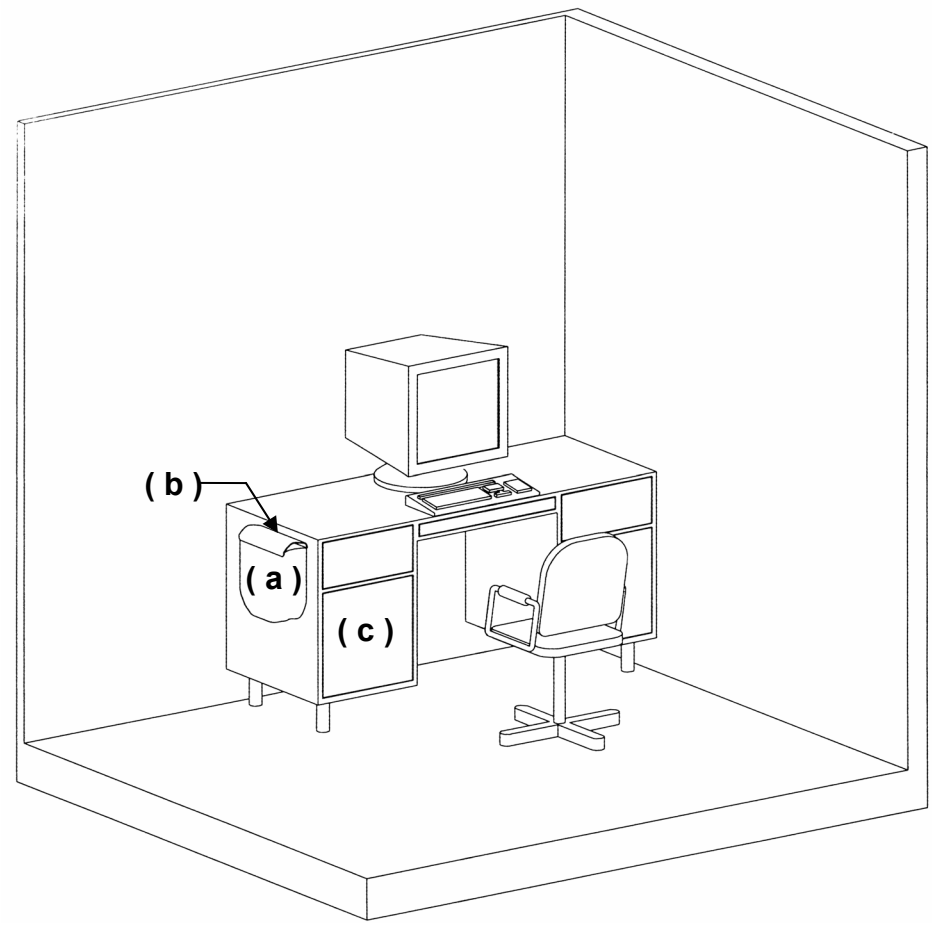

DAMAGE CONTROL EQUIPMENT STOWAGE SKETCH #031

MCU-2P STOWAGE PLAN

WORKSTATION

NEW SKETCH

(a) 1 MCU-2P KIT INCLUDES:
1 BAG, MCU-2P KIT
1 MCU-2P MASK
(b) 1 MCU-2P STOWAGE HOOK
(c) WATCH STATION

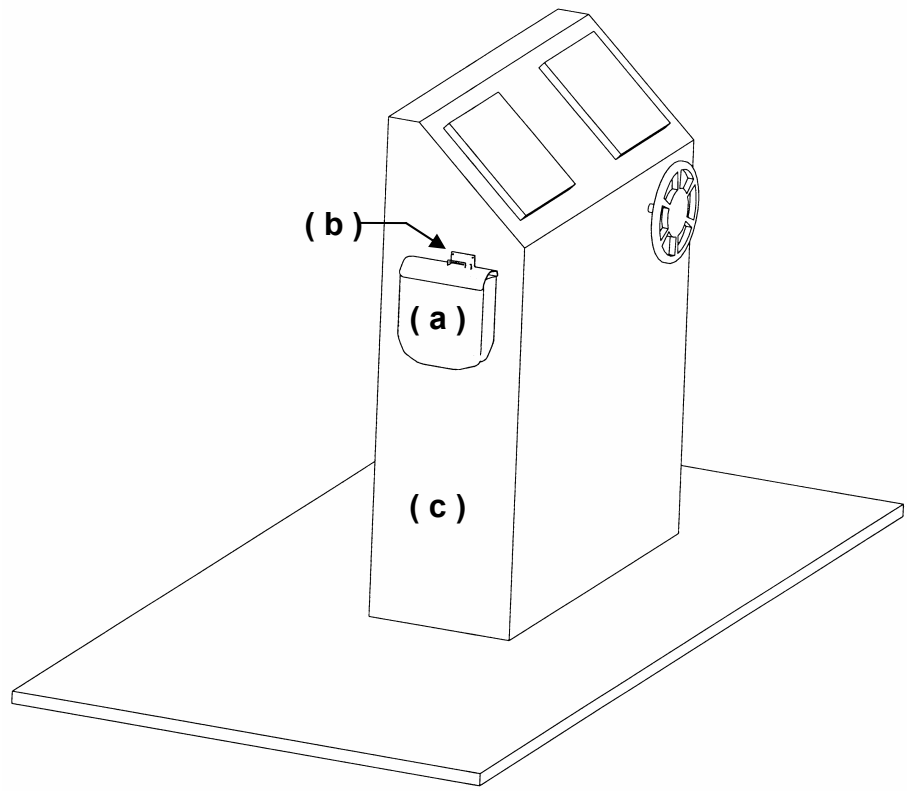

DAMAGE CONTROL EQUIPMENT STOWAGE SKETCH #032

MCU-2P STOWAGE PLAN

BRIDGE WATCH STATION

Section 4

**SKETCHES OF STOWAGE DEVICES
FOR DAMAGE CONTROL EQUIPMENT**

- **Adjustable Shelves**
- **Brackets**
- **Lockers**
- **CBR-D IPE Stowage Racks and Hooks**
- **MCU-2P Stowage Racks and Hooks**

DAMAGE CONTROL EQUIPMENT STOWAGE SKETCHES

SECTION 4 SKETCH NO.	TITLE OF SKETCH
001	Adjustable Shelves, Version 1
002	Adjustable Shelves, Version 2
003	AFFF Stowage Rack (5 Gal Can), Version 1
004	AFFF Stowage Rack (5 Gal Can), Version 2
005	AFFF Stowage Rack (5 Gal Can), Version 3
006	Box Patch Stowage Rack for Assemblies 1, 2 and 3
007	CBR Equipment Stowage Locker
008	Casualty Power Cable Stowage Rack
009	Damage Control Equipment Stowage (Large) Grating
010	Damage Control Equipment Stowage (Spring Clips)
011	Damage Control Equipment Stowage Support Brackets
012	Damage Control Locker, Various Equipment
013	Damage Control Locker, Various Equipment
014	Damage Control Locker, Various Equipment
015	Damage Control Locker, Various Equipment
016	Damage Control Locker, Various Equipment
017	Damage Control Locker, Various Equipment
018	Damage Control Locker, Various Equipment
019	Damage Control Locker, Various Equipment
020	Damage Control Locker, Various Equipment
021	Dewatering Kit Stowage Locker
022	Eductor, 1½" Vertical Stowage Bracket
023	Eductor, 1½" Vertical Stowage Rack
024	Eductor, 2½" Peri-Jet Horizontal Stowage
025	Eductor, 2½" Peri-Jet Vertical Stowage Rack
026	Eductor/Peri-Jet (1½"/2½") Vertical Stowage Rack
027	Fan Stowage Tube Axial, BHD Mounted Grating
028	Fan Stowage Red Devil, BHD Mounted Grating
029	Fan Stowage Red Devil, BHD/DK Mounted Plate
030	Fan Stowage Tube Axial, BHD/DK Mounted Plate

SECTION 4 SKETCH NO.	TITLE OF SKETCH
031	Fan Stowage Tube Axial, BHD/DK Mounted Plate
032	Fan Stowage Water Driven, BHD Mounted Grating
033	Fan Stowage Water Driven, Deck Mounted Plate
034	Fan Stowage Water Driven BHD/DK Mounted Plate
035	Fire Fighters' Boot Stowage Rack, Version 1 (Locker Mounted)
036	Fire Fighters' Boot Stowage Rack, Version 2 (Deck Mounted)
037	Fire Fighters' Boot Stowage Rack, Version 3 (Beam Mounted)
038	Fire Fighters' Boot Stowage (BHD Mounted) Version 4
039	Fire Fighters' Ensemble Coverall Stowage Hanger Bar, Version 1
040	Fire Fighters' Ensemble Coverall Stowage (Hook) Version 2
041	Fire Fighters' Ensemble Coverall Stowage Lockers, Version 3
042	Fire Fighters' Helmet Stowage (Butter Fly Clip)
043	Fire Fighters' Helmet Stowage Rack, Version 1
044	Fire Fighters' Helmet Stowage Rack, Version 2
045	Fire Fighting Equipment & Proximity Suit Stowage Locker
046	Fire Hose Hanger Stowage Rack
047	Gas Free Engineer Equipment Stowage Locker, Version 1
048	Gas Free Engineer Equipment Stowage Locker, Version 2
049	General Quarters Equipment Stowage, Version 1
050	General Quarters Equipment Stowage Locker, Version 2
051	General Quarters Equipment Stowage, Version 3
052	Hooks, Miscellaneous Damage Control Stowage
053	Hose Stowage (Cradle) (one 1½", one 2½, one 4" hose) Version 1
054	Hose Stowage (Cradle) Version 2
055	Hose Stowage Bracket
056	Hose Stowage Rack, One - 4" x 10' Disch. Hose
057	Hose Stowage Rack, One - 2" x 20' (Exhaust Hose, Rubber P250), Two - 2½" x 50' Fire Hose
058	Hose Stowage Rack, Three - 3" x 10' Suct. Hose (P250) or Four - 2½" x 10' Suct. Hose (Sub. Pmp)
059	Hose Stowage Rack, Two - 1½" x 50' Fire Hose
060	Hose Stowage Rack (Hard Hose Clips) 10' and 20' lengths

SECTION 4 SKETCH NO.	TITLE OF SKETCH
061	Hose Stowage Rack (Hard Suction) 3½" x 36" and 3½" x 84" lengths
062	Ladder, (6 Ft. Scaling) Stowage Brackets, Horizontal
063	Ladder, (6 Ft. Scaling) Stowage Brackets, Vertical
064	Miscellaneous Access Tool Stowage
065	NFTI Stowage Rack
066	OBA and OBA Canister Stowage Locker
067	OBA Canister Stowage Rack, Version 1
068	OBA Canister Stowage Rack, Version 2
069	OBA Stowage Locker, Single Unit
070	OBA Stowage Rack, Version 1
071	OBA Stowage Rack, Version 2
072	P-250 Equipment Accessory Stowage
073	P-250, MOD2 Propane Cartridge Stowage
074	PECU Rod Stowage
075	PECU Stowage Rack Foundation
076	Personnel Protection Equipment Stowage, (Built in Cage)
077	Personnel Protection Equipment Stowage, Version 1 (3 FFE)
078	Personnel Protection Equipment Stowage, Version 2 (4 FFE)
079	PHARS Stowage Brackets
080	Plate Patch Stowage Rack
081	Portable Sub-Pump Stowage
081A	Portable Sub-Pump Stowage, Single Unit
081B	Portable Sub-Pump Stowage, Double Unit
082	Rescue and Assistance Chest
083	Shoring Metal Stowage Rack, Horizontal, Version 1
084	Shoring Metal Stowage Rack, Horizontal, Version 2
085	Shoring Metal Stowage Rack, Vertical, Version 3
086	Shoring Metal Stowage Rack, Vertical, Version 4
087	Shoring Metal Stowage Rack, Vertical, Version 5
088	Shoring Wooden, Stowage Rack (4 pcs) with Shoring Batten Stowage
089	Shoring Wooden, Stowage Rack (9 pcs) with Shoring Batten Stowage

DAMAGE CONTROL EQUIPMENT STOWAGE SKETCHES

SECTION 4 SKETCH NO.	TITLE OF SKETCH
090	Smoke Curtain Hooks
091	Smoke Curtain Stowage Bracket
092	Smoke Curtain Stowage Locker
093	Smoke Generator Stowage Rack
094	Vari-Nozzle Holder, 1 ½" and 2 ½"
095	Vent Hose Stowage, BHD Mounted, Vertical, Version 1
096	Vent Hose Stowage, Vertical, Version 2
097	Welding Machine Stowage Rack
098	CBR-D IPE Stowage Rack, Track System – Vertical Mount (Deck to Overhead)
099	CBR-D IPE Stowage Rack, Track System – Horizontal Mount (Bulkhead)
100	CBR-D IPE Stowage Hook
101	MCU-2P Stowage Rack
102	MCU-2P Stowage Hook

ADJUSTABLE SHELF CHANNEL SYSTEM

1. CHANNEL SYSTEM TO BE EQUAL TO THOSE AVAILABLE TO:

   GRUMMAN EMERGENCY PRODUCTS, INC.
   1723 SEIBEL DR., NE
   ROANOKE VA 24012-5688
   (703) 982-66666 FAX: (703) 985-2280

2. INSTALL FOUR CHANNELS, TWO ON EACH SIDE LEAVING FOUR INCHES CLEARANCE AT TOP FOR INSERTING SHELF AND BRACKETS.

3. INSTALL BRACKETS AND BACKING PIECES (4).

4. REMOVE BRACKETS AND SHELF; DRILL HOLES IN SHELF; BOLT SHELF TO BRACKETS; INSTALL SHELF IN CABINET.

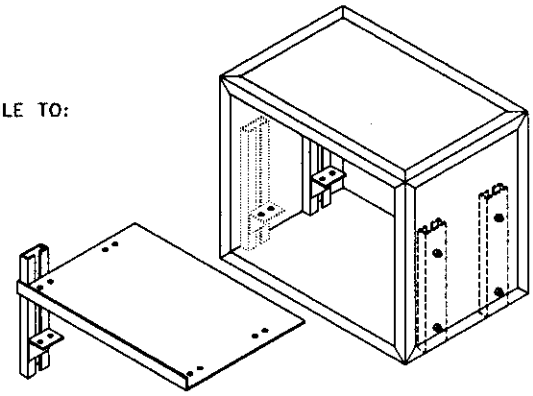

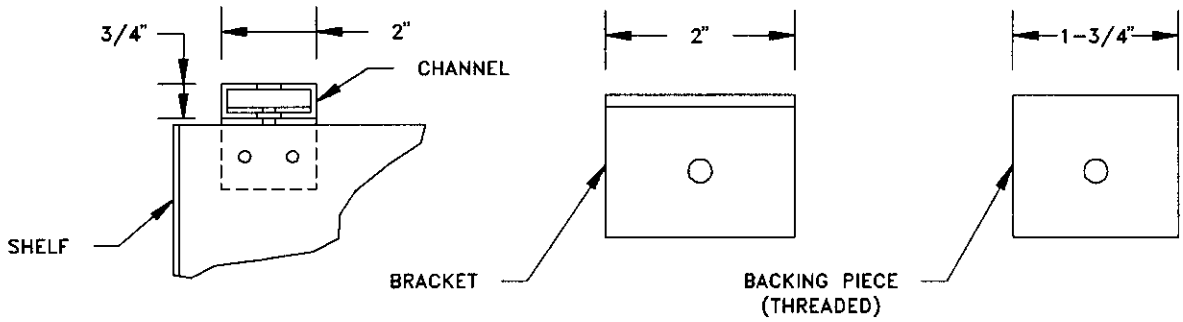

PLAN

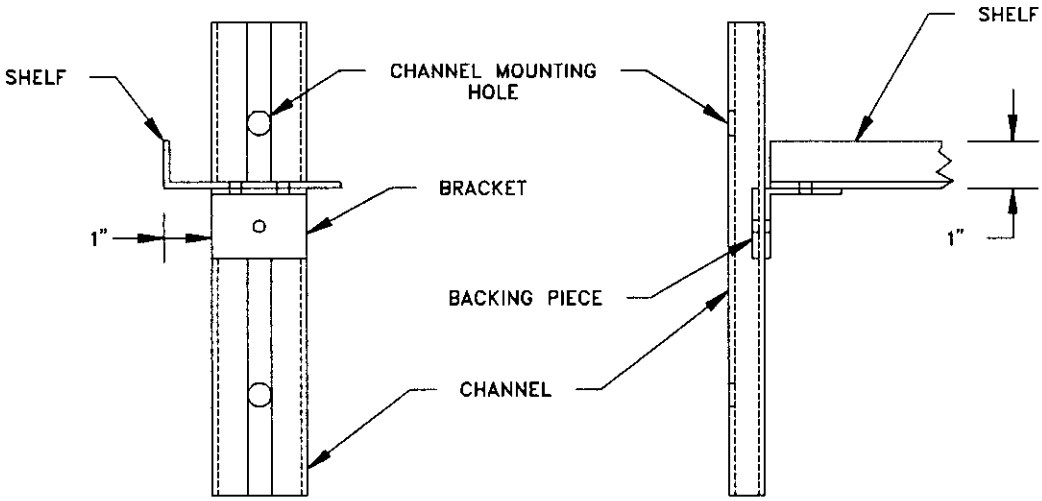

ELEVATION **SIDE VIEW**

DAMAGE CONTROL EQUIPMENT STOWAGE SKETCH # 001

ADJUSTABLE SHELVES
VERSION 1

DCES001

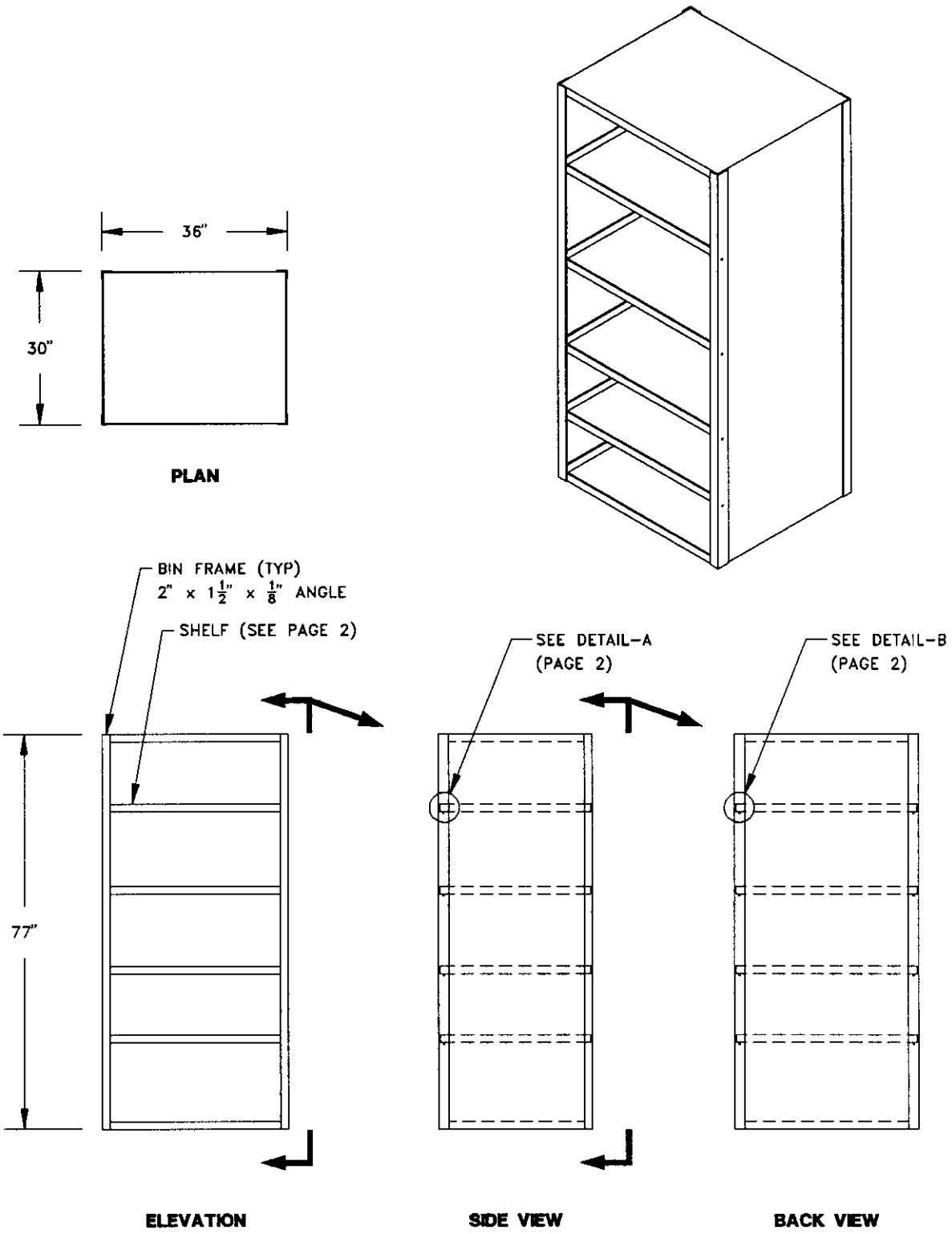

DAMAGE CONTROL EQUIPMENT STOWAGE SKETCH # 002

ADJUSTABLE SHELVES, VERSION 2
(PAGE 1 OF 2)

DCES002A

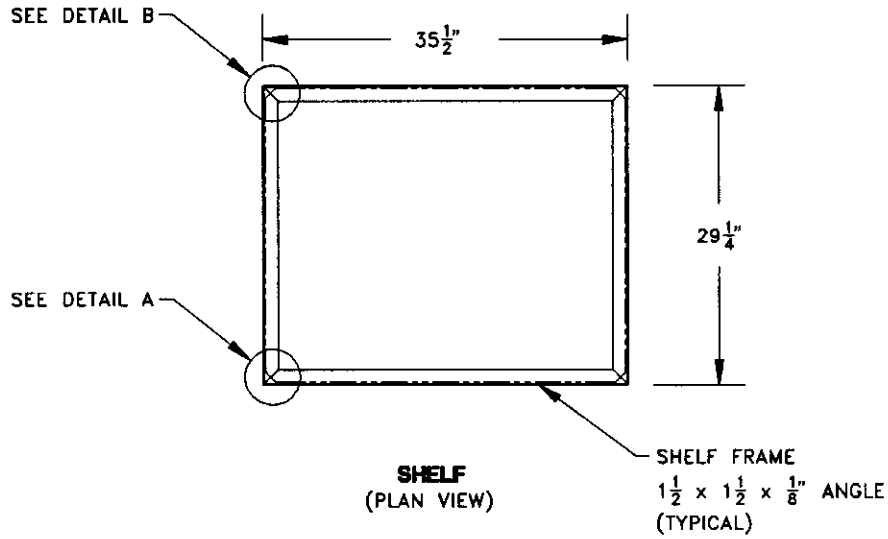

SHELF
(PLAN VIEW)

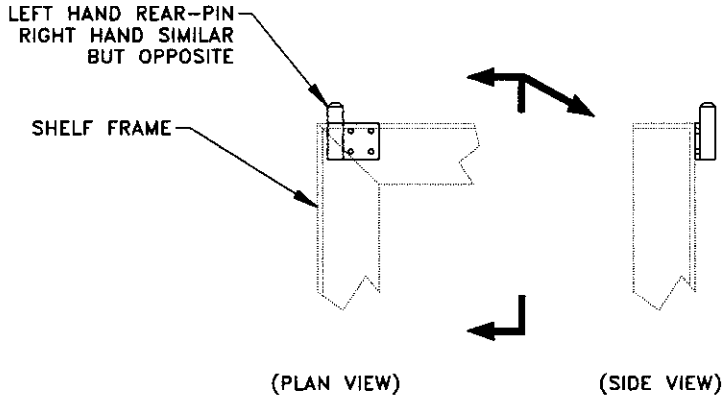

DETAIL B

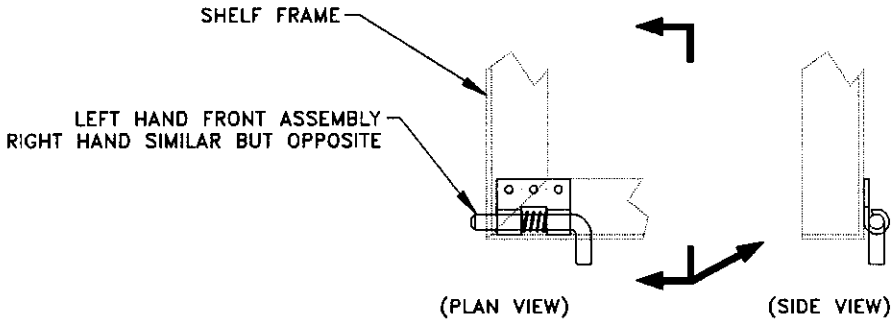

DETAIL A

DAMAGE CONTROL EQUIPMENT STOWAGE SKETCH # 002

ADJUSTABLE SHELVES, VERSION 2
(PAGE 2 OF 2)

DCES002B

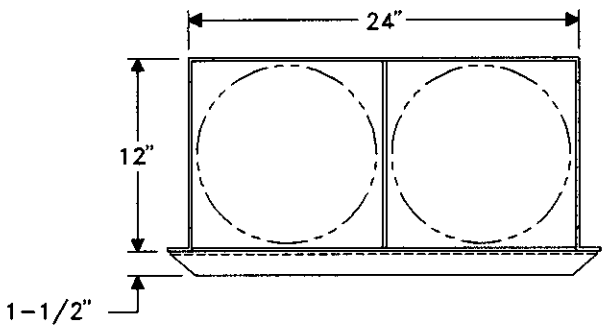

PLAN

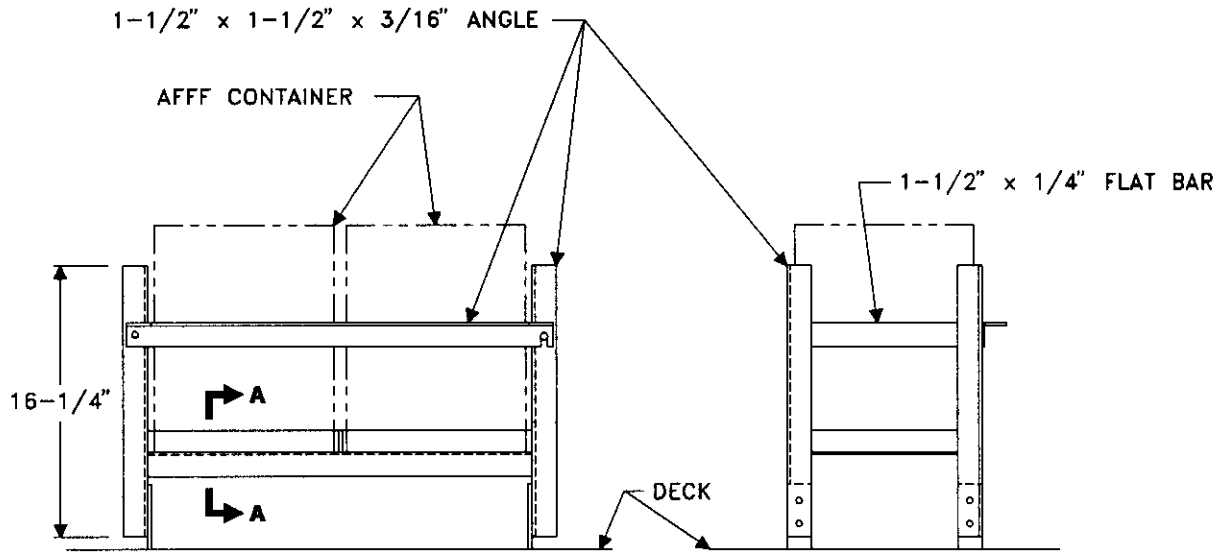

ELEVATION **SIDE VIEW**

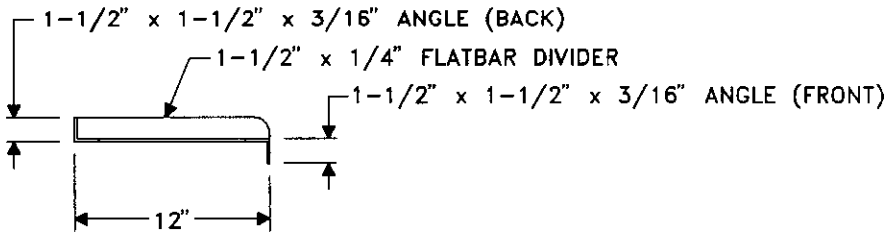

SECTION A-A

DAMAGE CONTROL EQUIPMENT STOWAGE SKETCH # 003

AFFF (5 GAL CAN) STOWAGE RACK
VERSION 1

DCES003

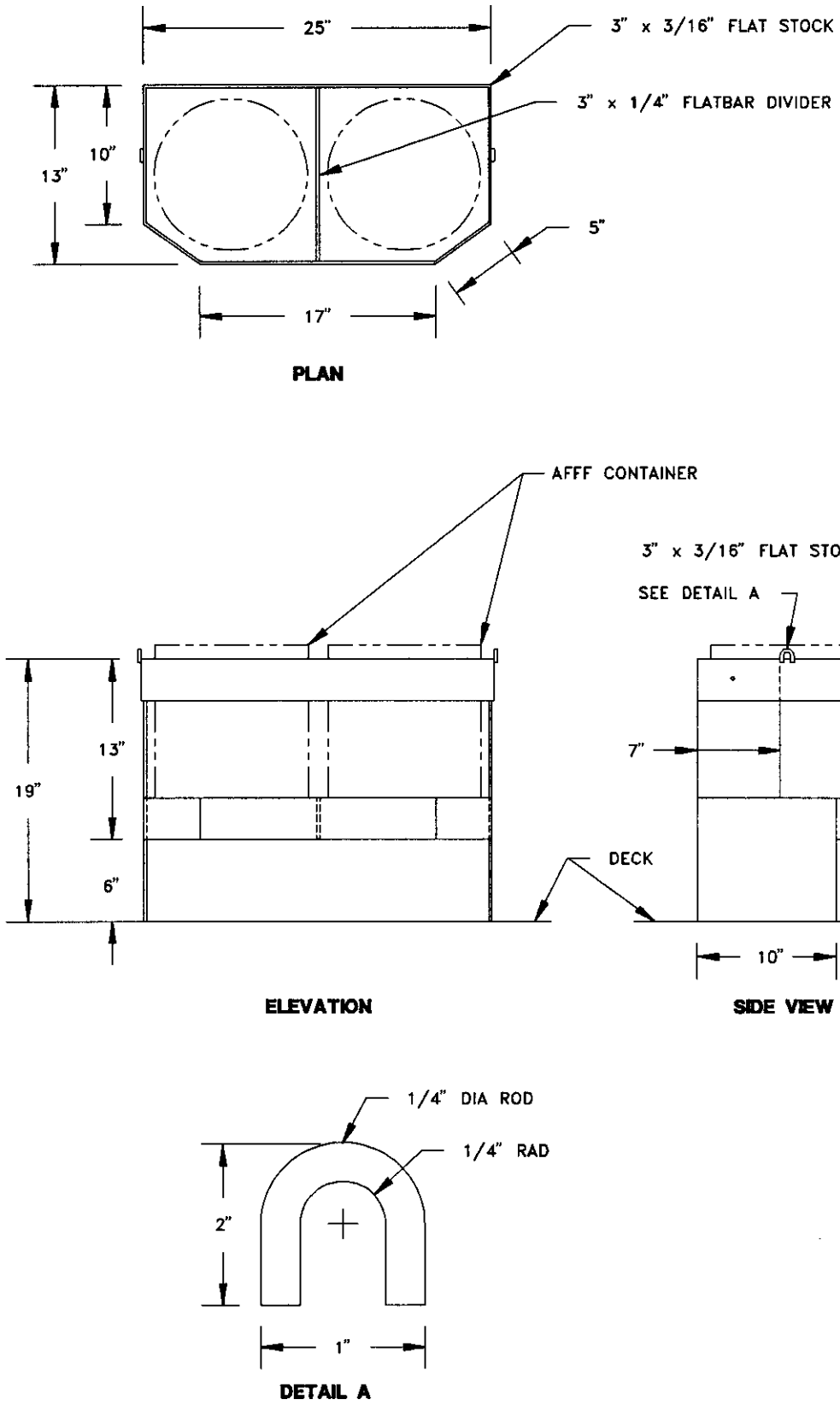

DAMAGE CONTROL EQUIPMENT STOWAGE SKETCH # 004

AFFF (5 GAL CAN) STOWAGE RACK
VERSION 2

DCES004

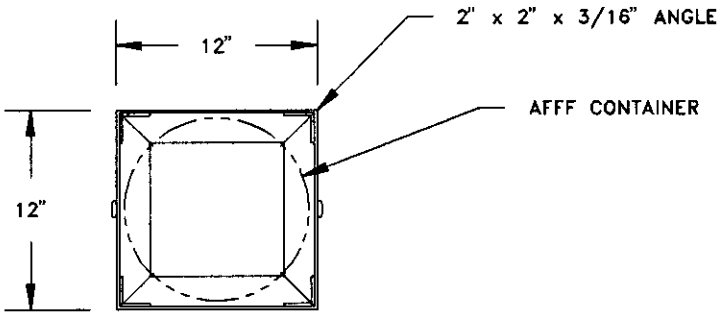

PLAN

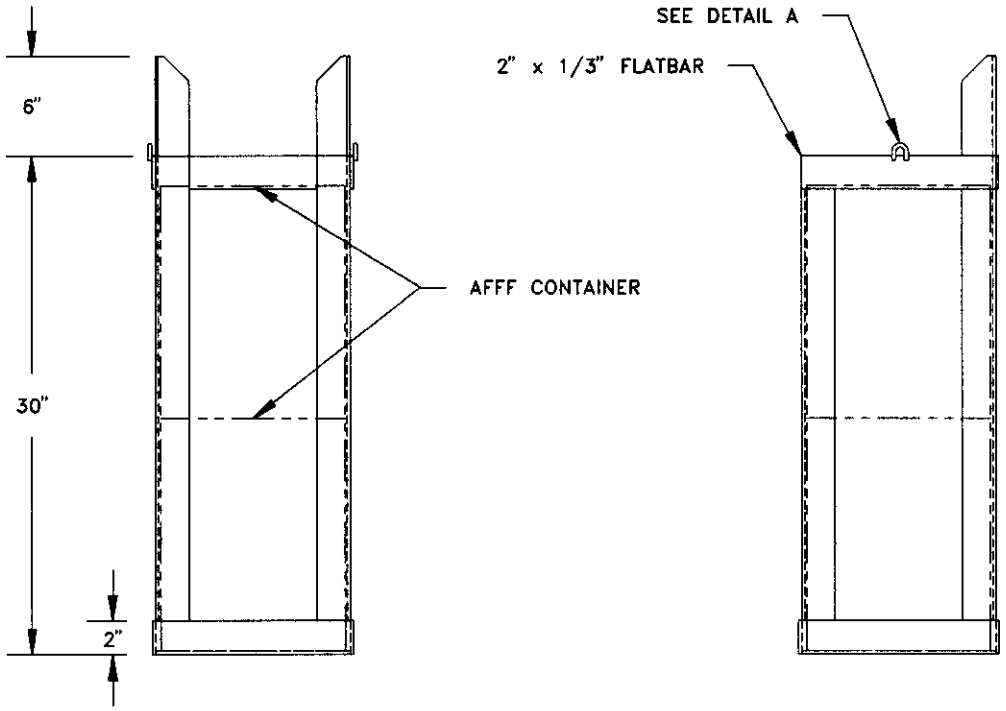

ELEVATION **SIDE VIEW**

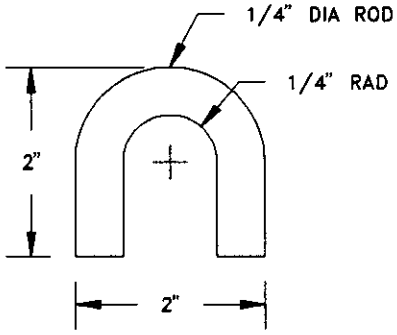

DETAIL A

DAMAGE CONTROL EQUIPMENT STOWAGE SKETCH # 005

AFFF (5 GAL CAN) STOWAGE RACK
VERSION 3

DCES005

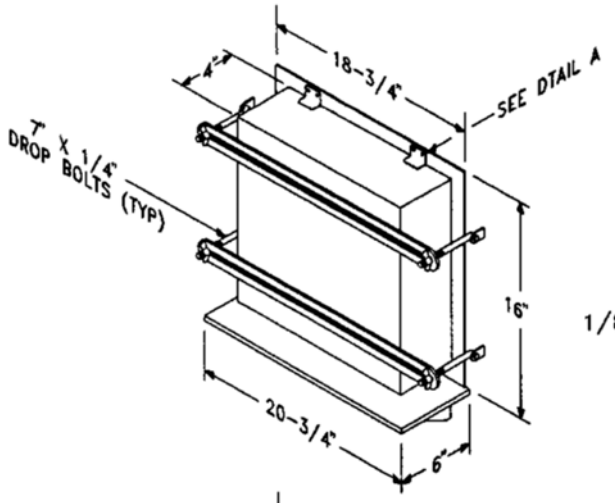

ASSEMBLY 1

STOWAGE RACK FOR
4" X 16" X 18-3/4"
1/8" STEEL PLATE BOX PATCH

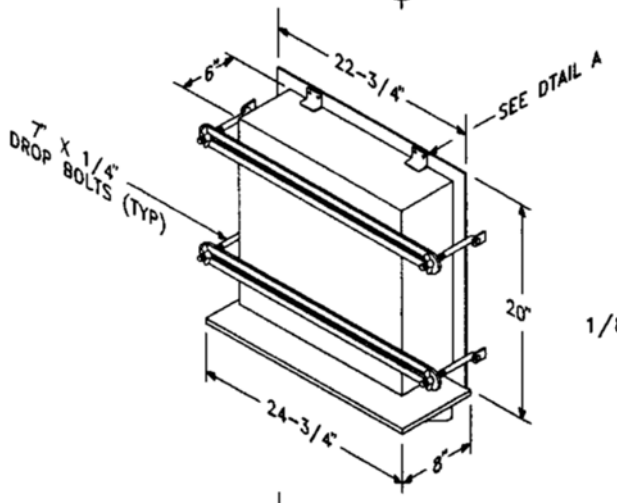

ASSEMBLY 2

STOWAGE RACK FOR
6" X 20" X 22-3/4"
1/8" STEEL PLATE BOX PATCH

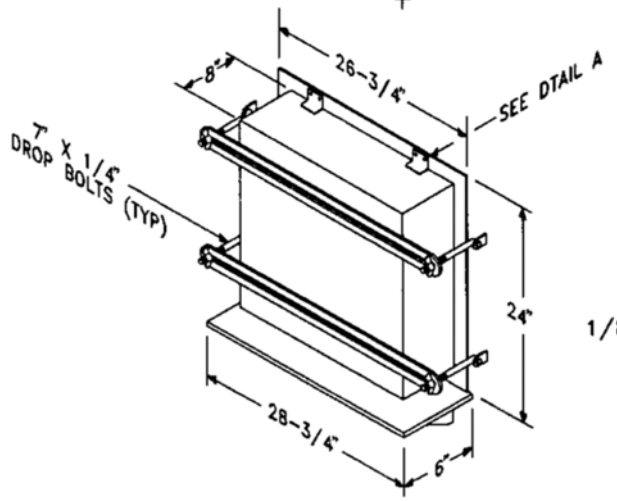

ASSEMBLY 3

STOWAGE RACK FOR
8" X 24" X 26-3/4"
1/8" STEEL PLATE BOX PATCH

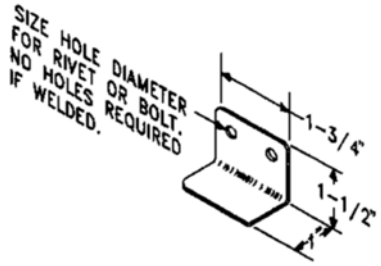

DETAIL A

DAMAGE CONTROL EQUIPMENT STOWAGE SKETCH # 006

BOX PATCH STOWAGE RACKS FOR ASSEMBLIES 1, 2 AND 3

DCES006

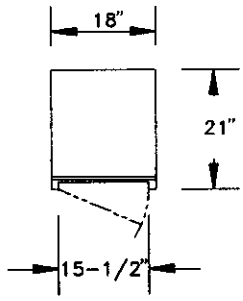

PLAN

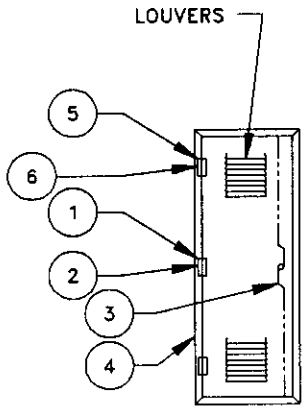

ELEVATION

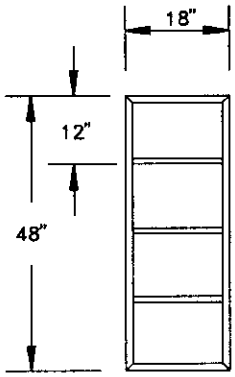

ELEVATION (NO DOORS)

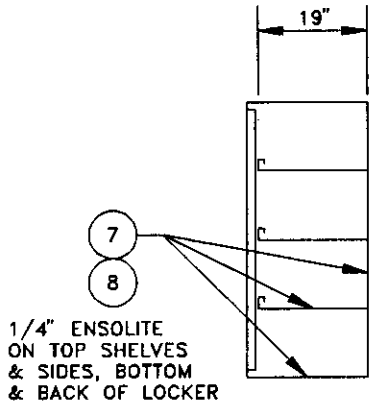

SIDE VIEW

DAMAGE CONTROL EQUIPMENT STOWAGE SKETCH # 007

CBR EQUIPMENT STOWAGE LOCKER
PAGE 1 OF 2

DCES007A

	ASSY	LIST OF MATERIAL			
QTY	PART NO.	NAME	MATERIAL	REFERENCES	REMARKS
3	1	HINGE, 2" x 1-5/8"	STL CAD PLTD	NN STOCK 17-15-302	
3	2	ANTI-RATTLER	RUBBER PURE GUM		
1	3	LOCKING DEVICE	SEE DET DWG	ASSY65, REF 6	
1	4	LOCKER	SEE DET DWG	REF 5	
6	5	HUCK RIVET SELF PLUGGING BLIND NO. P-6-D	ALUMINUM		
6	6	HUCK COMMERCIAL LOCK BOLT NO. CLPB F6-2	ALUMINUM		
AS REQ'D	7	1/4" ENSOLITE	TY III RUBBER		MIL-P-15280
AS REQ'D	8	BONDING AGENT	CEMENT		MIL-A-24179

DAMAGE CONTROL EQUIPMENT STOWAGE SKETCH # 007

CBR EQUIPMENT STOWAGE LOCKER
PAGE 2 OF 2

DCE30078

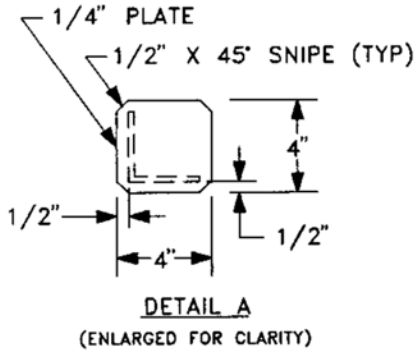

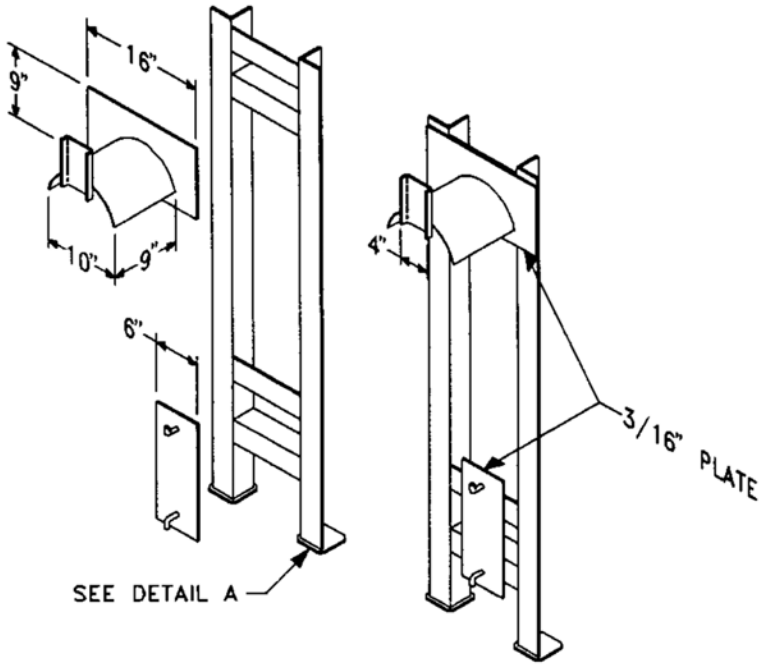

ISOMETRIC VIEW

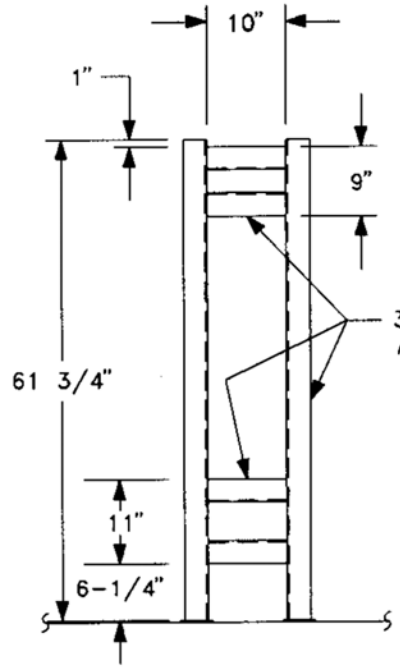

ELEVATION
(RACKS REMOVED FOR CLARITY)

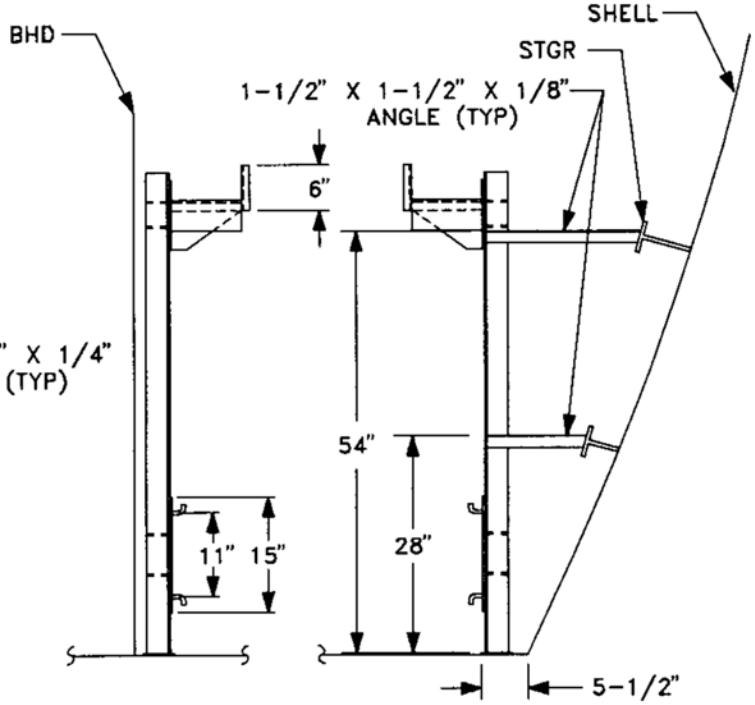

SIDE VIEW
(VERTICAL BHD)

SIDE VIEW
(ANGLED BHD)

NOTE: CAN BE INSTALLED AGAINST SHELL STRINGER.

DAMAGE CONTROL EQUIPMENT STOWAGE SKETCH # 008

CASUALTY POWER CABLE STOWAGE RACK WITH VERTICAL AND ANGLED BULKHEAD STOWAGE

DCES008

LARGE DC EQUIPMENT

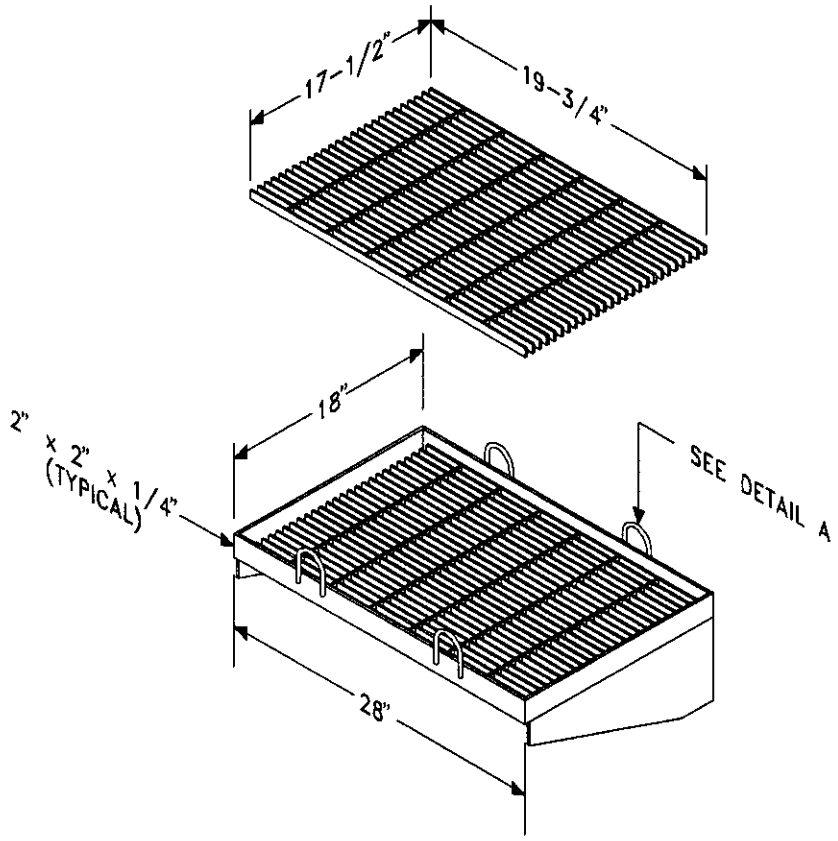

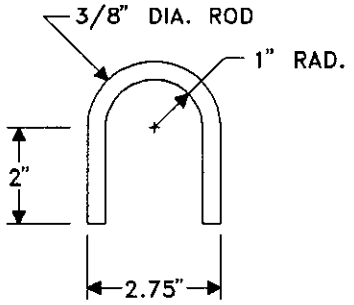

DETAIL A

DAMAGE CONTROL EQUIPMENT STOWAGE SKETCH # 009

DAMAGE CONTROL EQUIPMENT STOWAGE (LARGE) GRATING

DCES009

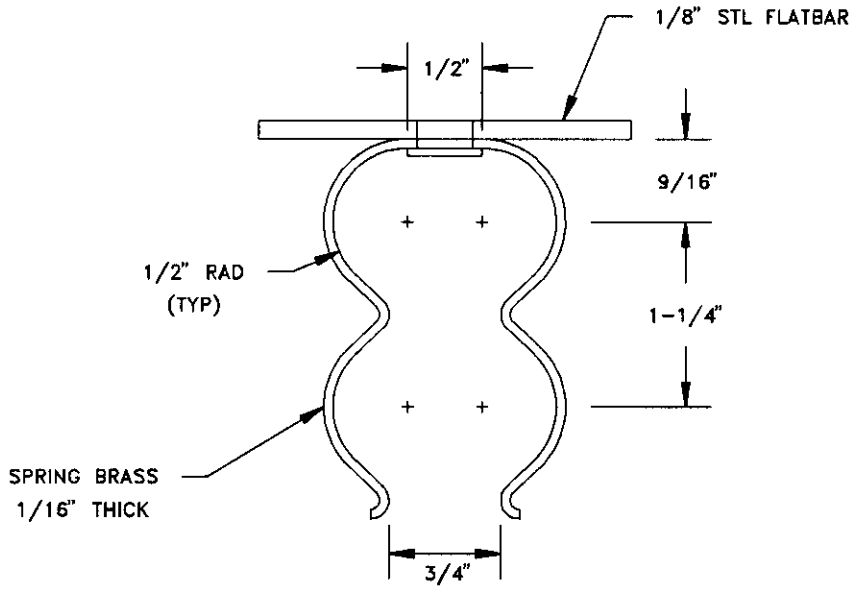

ELEVATION

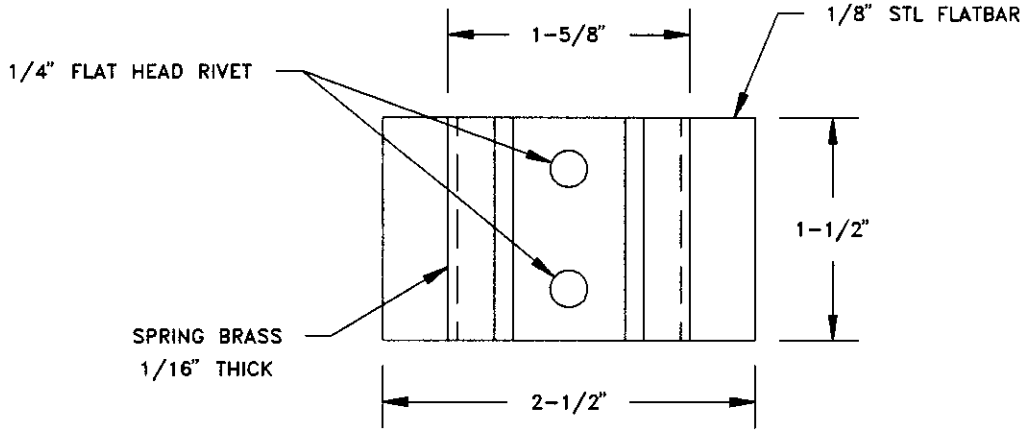

ELEVATION

SPRING CLIP FOR 2 AXES

DAMAGE CONTROL EQUIPMENT STOWAGE SKETCH # 010

DAMAGE CONTROL EQUIPMENT STOWAGE (SPRING CLIPS)
PAGE 1 OF 3

DCE501DA

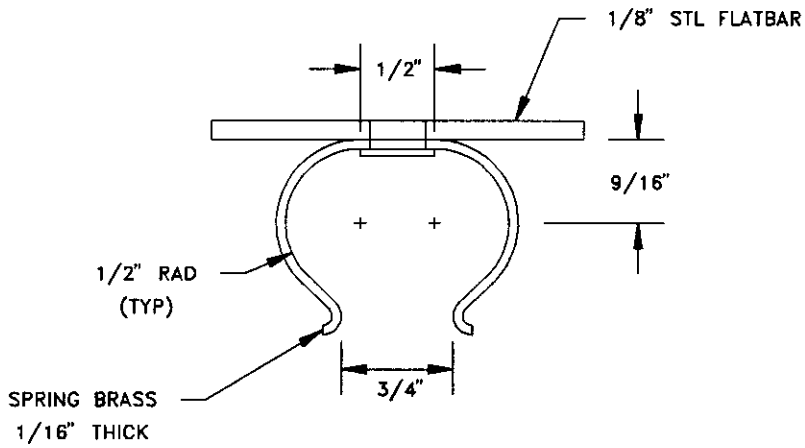

ELEVATION

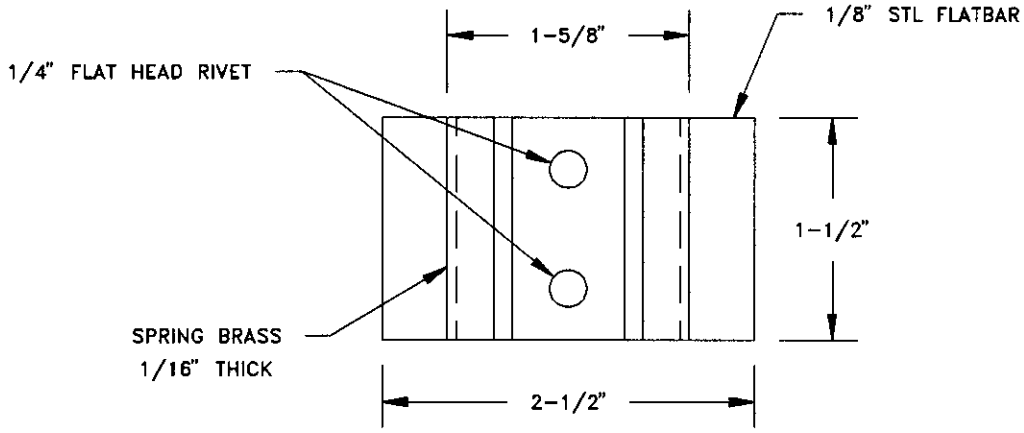

ELEVATION

SPRING CLIP

DAMAGE CONTROL EQUIPMENT STOWAGE SKETCH # 010

DAMAGE CONTROL EQUIPMENT STOWAGE (SPRING CLIPS)
PAGE 2 OF 3

DCES010B

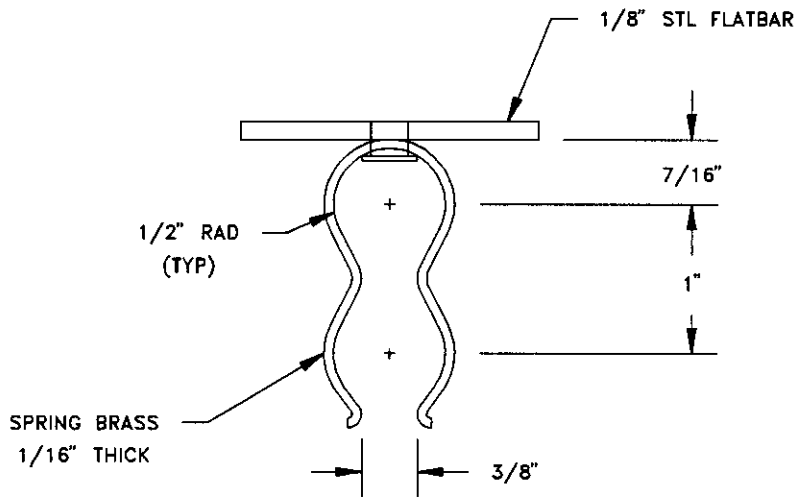

ELEVATION

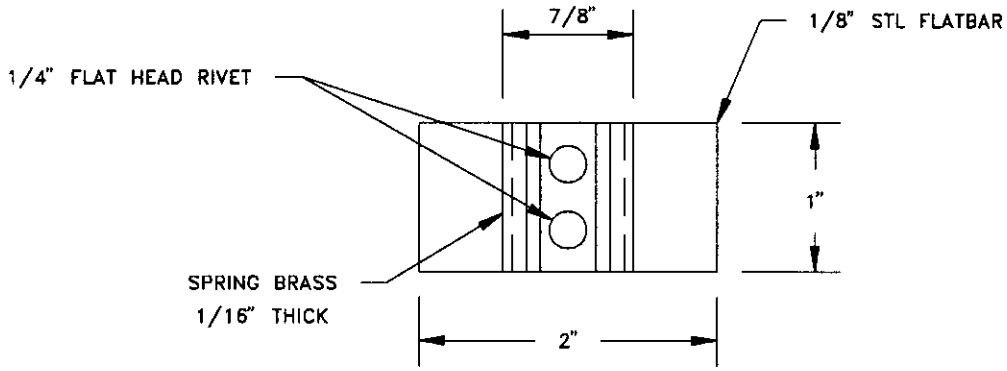

ELEVATION

SPRING CLIP FOR 2 WRECK BARS

DAMAGE CONTROL EQUIPMENT STOWAGE SKETCH # 010

DAMAGE CONTROL EQUIPMENT STOWAGE (SPRING CLIPS)
PAGE 3 OF 3

DCES010C

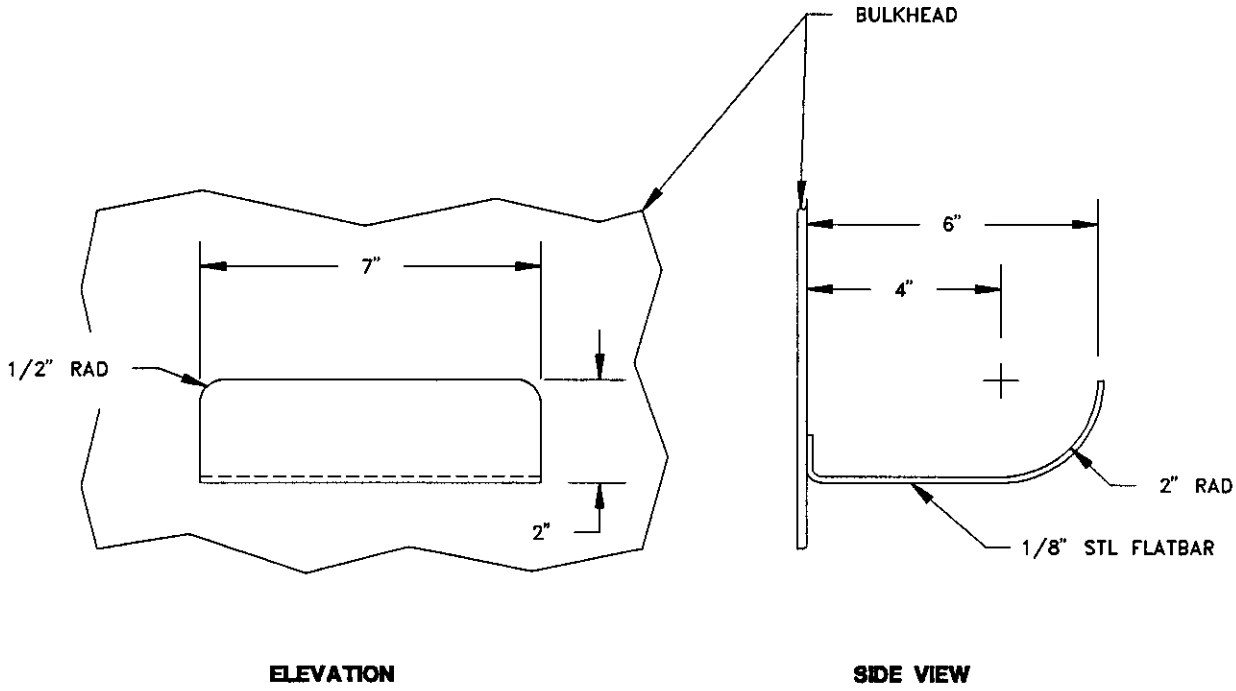

"L" SUPPORT

DAMAGE CONTROL EQUIPMENT STOWAGE SKETCH # 011

DAMAGE CONTROL EQUIPMENT STOWAGE SUPPORT BRACKETS
PAGE 1 OF 4

DCES011A

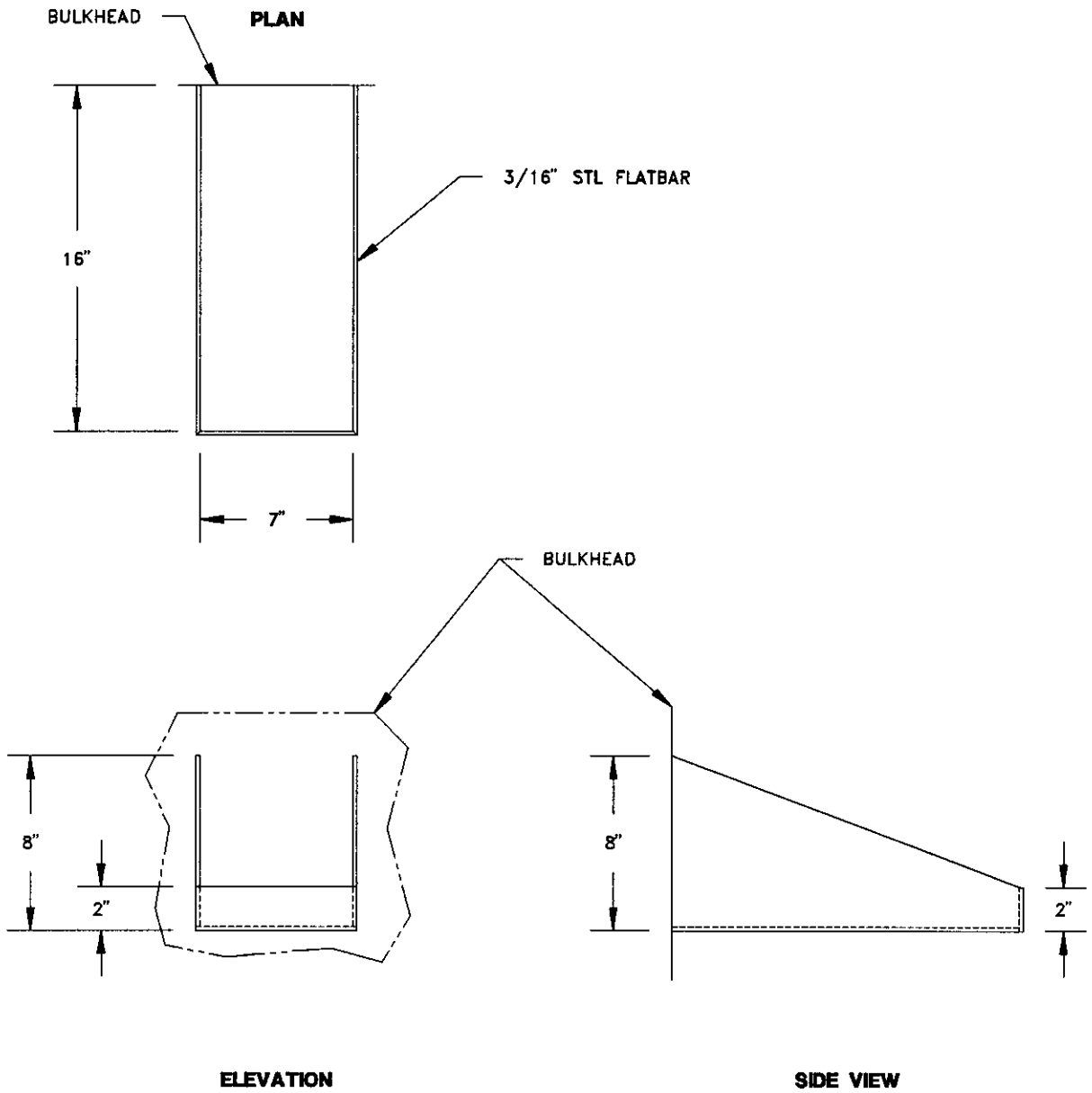

"P" SUPPORT

DAMAGE CONTROL EQUIPMENT STOWAGE SKETCH # 011

DAMAGE CONTROL EQUIPMENT STOWAGE SUPPORT BRACKETS
PAGE 2 OF 4

DCES011B

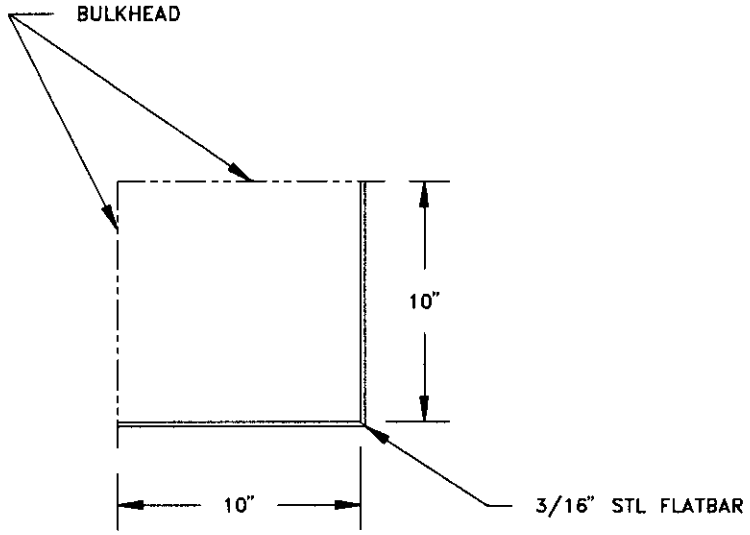

PLAN

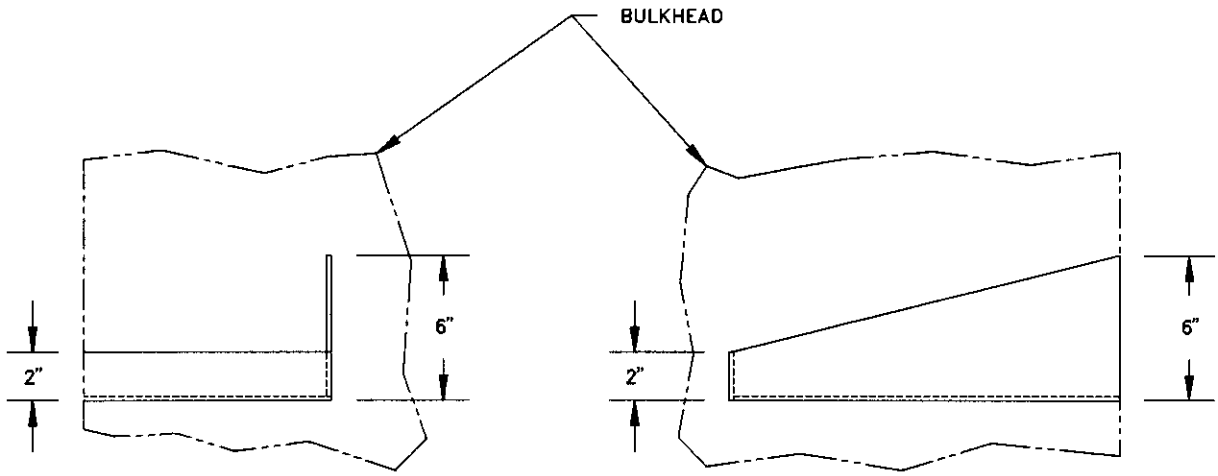

ELEVATION **SIDE VIEW**

"Q" SUPPORT

DAMAGE CONTROL EQUIPMENT STOWAGE SKETCH # 011

DAMAGE CONTROL EQUIPMENT STOWAGE SUPPORT BRACKETS
PAGE 3 OF 4

DCES011C

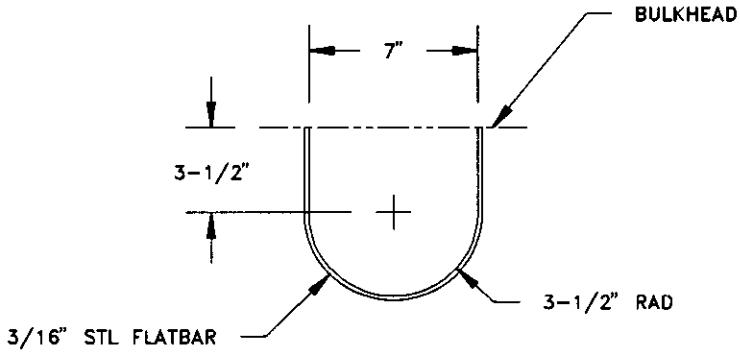

PLAN

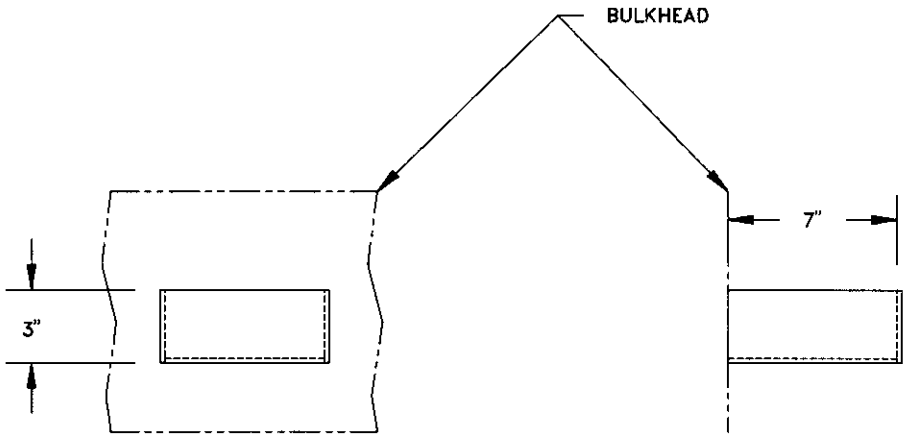

ELEVATION **SIDE VIEW**

"R" SUPPORT

DAMAGE CONTROL EQUIPMENT STOWAGE SKETCH # 011

DAMAGE CONTROL EQUIPMENT STOWAGE SUPPORT BRACKETS
PAGE 4 OF 4

DCE5011D

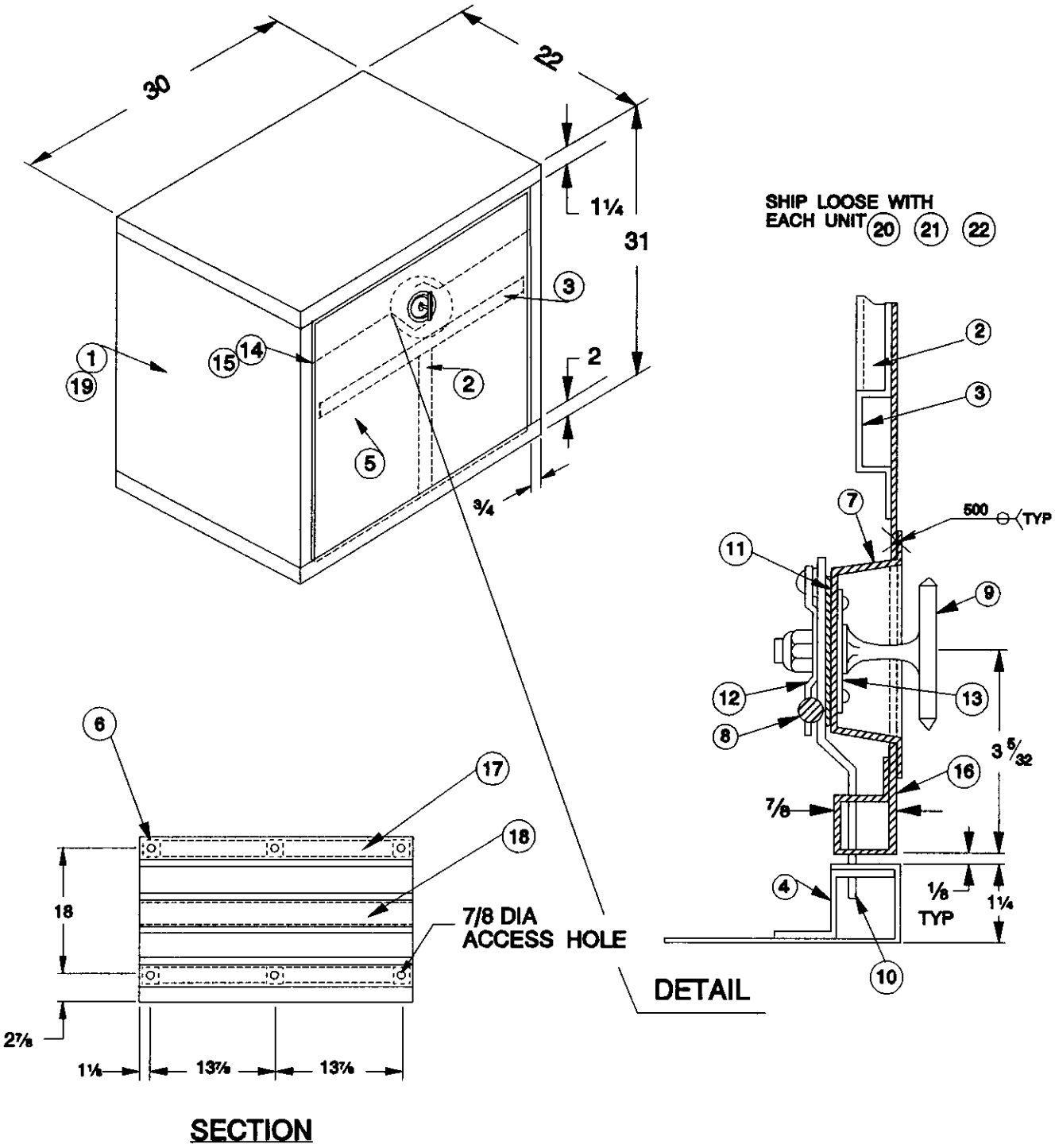

DAMAGE CONTROL EQUIPMENT STOWAGE SKETCH #012

DAMAGE CONTROL LOCKER, VARIOUS EQUIPMENT

Page 1 of 2

LIST OF MATERIAL

NO.	DESCRIPTION	Qty.	MATERIAL
1	LOCKER	1	.063 AL. 5052-H32
2	STIFFENER, DOOR, VERT	1	.063 AL. 5052-H32
3	STIFFENER, DOOR, HORZ	1	.063 AL. 5052-H32
4	STIFFENER, LOCKER	4	.063 AL. 5052-H32
5	DOOR	1	.050 AL 5052-H32
6	REINF. PAD 2X2	6	¼ THK ALUM.
7	RECESS CUP	1	.050 ALUM
8	LOCK ROD	2	5/16 Ø SPADE BOLT, STEEL
9	TEE HANDLE	1	S3200-860055, PC# 13
10	LKG DVC PLATE	1	11 GA CRES
11	LKG DVC CAM	1	12 GA CREW
12	LKG DVC STRAP	1	16 GA CRES
13	ESCUTCHEON	1	20 GA CRES
14	DOOR FERRULE	2	HEYCO 58-500-5
15	DOOR/FRAME FERRULE	4	HEYCO 58-500-6
16	STIFFENER DOOR	4	.050 ALUM 5052-H32
17	STIFFENER	2	.063 ALUM 5052-H32
18	STIFFENER	1	.063 ALUM 5052-H32
19	BUMPER	4	RUBBER
20	BOLT, H.HD. ⅜-16 1¼L	6	STEEL
21	NUT, SELF-LKG, ⅜-16	6	STEEL
22	WASHER, FLAT, ⅜ STD.	6	STEEL

GENERAL NOTES

1. UNIT APPROVED FOR GRADE "B" SHOCK SUPSHIP BATH APPROVAL SER# 250P/2614 DATED 26 MAR 1991.
2. FOR STOWAGE OF ANY ONE OF THE FOLLOWING DAMAGE CONTROL EQUIPMENT:
   - OBA CANISTER / 1 CARTON
   - LIFE JACKET
   - GAS MASK
   - GAS FREE EQUIPMENT
   - INVESTIGATOR'S EQUIPMENT

DAMAGE CONTROL EQUIPMENT STOWAGE SKETCH #012

DAMAGE CONTROL LOCKER, VARIOUS EQUIPMENT

Page 2 of 2

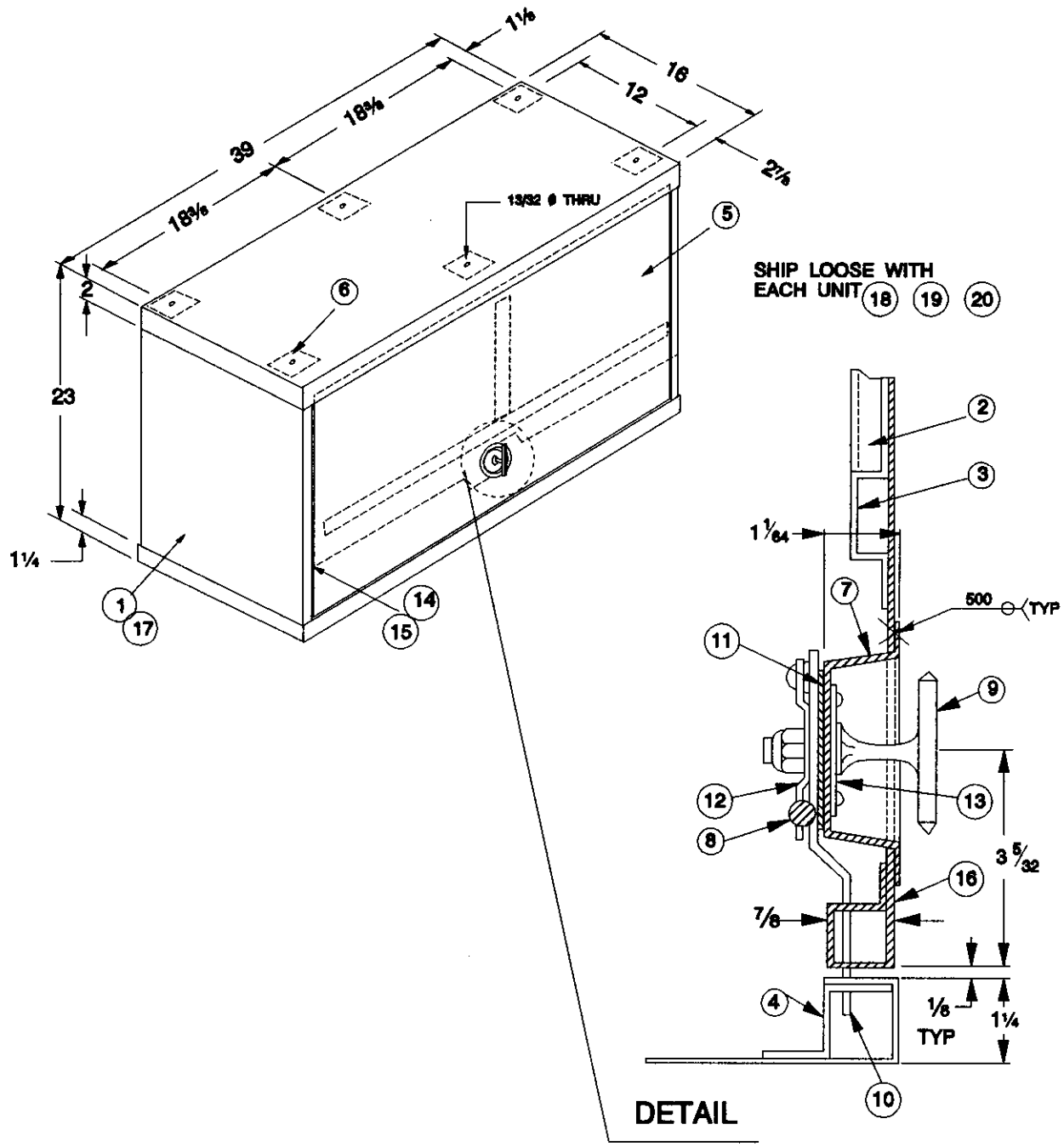

DAMAGE CONTROL EQUIPMENT STOWAGE SKETCH #013

DAMAGE CONTROL LOCKER, VARIOUS EQUIPMENT

Page 1 of 2

LIST OF MATERIAL

NO.	DESCRIPTION	Qty.	MATERIAL
1	LOCKER	1	.063 AL. 5052-H32
2	STIFFENER, DOOR, VERT	1	.063 AL. 5052-H32
3	STIFFENER, DOOR, HORZ	1	.063 AL. 5052-H32
4	STIFFENER, LOCKER	4	.063 AL. 5052-H32
5	DOOR	1	.050 AL 5052-H32
6	REINF. PAD 2X2	6	¼ THK ALUM.
7	RECESS CUP	1	.050 ALUM
8	LOCK ROD	2	5/16 Ø SPADE BOLT, STEEL
9	TEE HANDLE	1	S3200-860055, PC# 13
10	LKG DVC PLATE	1	11 GA CRES
11	LKG DVC CAM	1	12 GA CREW
12	LKG DVC STRAP	1	16 GA CRES
13	ESCUTCHEON	1	20 GA CRES
14	DOOR FERRULE	2	HEYCO 58-500-5
15	DOOR/FRAME FERRULE	4	HEYCO 58-500-6
16	DOOR/FRAME FERRULE	4	.050 ALUM 5052-H32
17	BUMPER	4	RUBBER
18	BOLT, H.HD. ⅜-16 1¼L	6	STEEL
19	NUT, SELF-LKG, ⅜-16	6	STEEL
20	WASHER, FLAT, ⅜ STD.	6	STEEL

GENERAL NOTES

1. UNIT APPROVED FOR GRADE "B" SHOCK SUPSHIP BATH APPROVAL SER# 250P/2614 DATED 26 MAR 1991.
2. FOR STOWAGE OF ANY ONE OF THE FOLLOWING DAMAGE CONTROL EQUIPMENT:
   - OBA CANISTER / 1 CARTON
   - LIFE JACKET
   - GAS MASK
   - GAS FREE EQUIPMENT
   - INVESTIGATOR'S EQUIPMENT

DAMAGE CONTROL EQUIPMENT STOWAGE SKETCH #013

DAMAGE CONTROL LOCKER, VARIOUS EQUIPMENT

Page 2 of 2

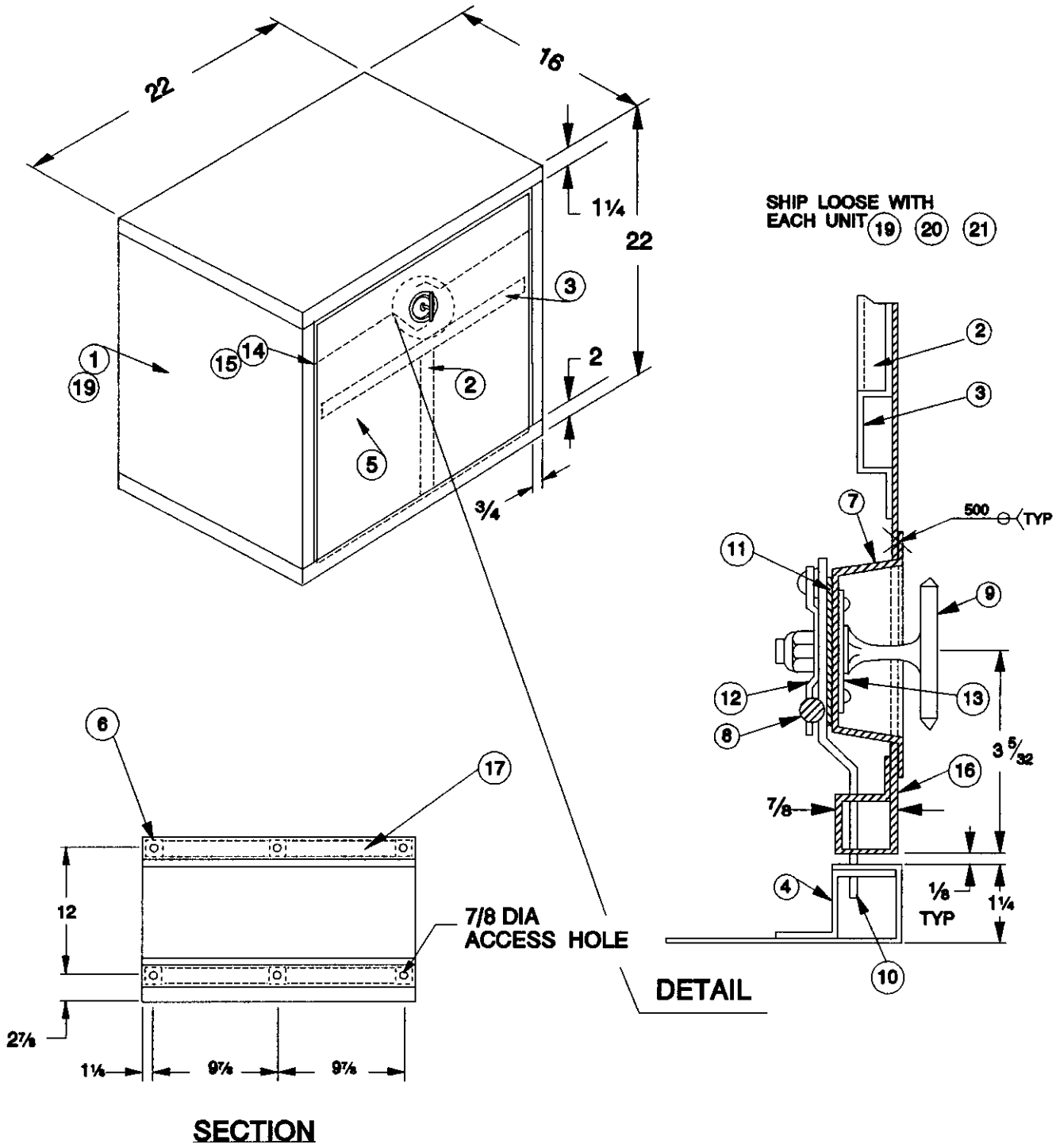

DAMAGE CONTROL EQUIPMENT STOWAGE SKETCH #014

DAMAGE CONTROL LOCKER, VARIOUS EQUIPMENT

Page 1 of 2

LIST OF MATERIAL

NO.	DESCRIPTION	Qty.	MATERIAL
1	LOCKER	1	.063 AL. 5052-H32
2	STIFFENER, DOOR, VERT	1	.063 AL. 5052-H32
3	STIFFENER, DOOR, HORZ	1	.063 AL. 5052-H32
4	STIFFENER, LOCKER	4	.063 AL. 5052-H32
5	DOOR	1	.050 AL 5052-H32
6	REINF. PAD 2X2	6	¼ THK ALUM.
7	RECESS CUP	1	.050 ALUM
8	LOCK ROD	2	5/16 Ø SPADE BOLT, STEEL
9	TEE HANDLE	1	S3200-860055, PC# 13
10	LKG DVC PLATE	1	11 GA CRES
11	LKG DVC CAM	1	12 GA CREW
12	LKG DVC STRAP	1	16 GA CRES
13	ESCUTCHEON	1	20 GA CRES
14	DOOR FERRULE	2	HEYCO 58-500-5
15	DOOR/FRAME FERRULE	4	HEYCO 58-500-6
16	STIFFENER DOOR	4	.050 ALUM 5052-H32
17	STIFFENER	4	.063 ALUM 5052-H32
18	BUMPER	4	RUBBER
19	BOLT, H.HD. ⅜-16 1¼L	6	STEEL
20	NUT, SELF-LKG, ⅜-16	6	STEEL
21	WASHER, FLAT, ⅜ STD.	6	STEEL

GENERAL NOTES

1. UNIT APPROVED FOR GRADE "B" SHOCK SUPSHIP BATH APPROVAL SER# 250P/2614 DATED 26 MAR 1991.
2. FOR STOWAGE OF ANY ONE OF THE FOLLOWING DAMAGE CONTROL EQUIPMENT:
   - OBA CANISTER / 1 CARTON
   - LIFE JACKET
   - GAS MASK
   - GAS FREE EQUIPMENT
   - INVESTIGATOR'S EQUIPMENT

DAMAGE CONTROL EQUIPMENT STOWAGE SKETCH #014

DAMAGE CONTROL LOCKER, VARIOUS EQUIPMENT

Page 2 of 2

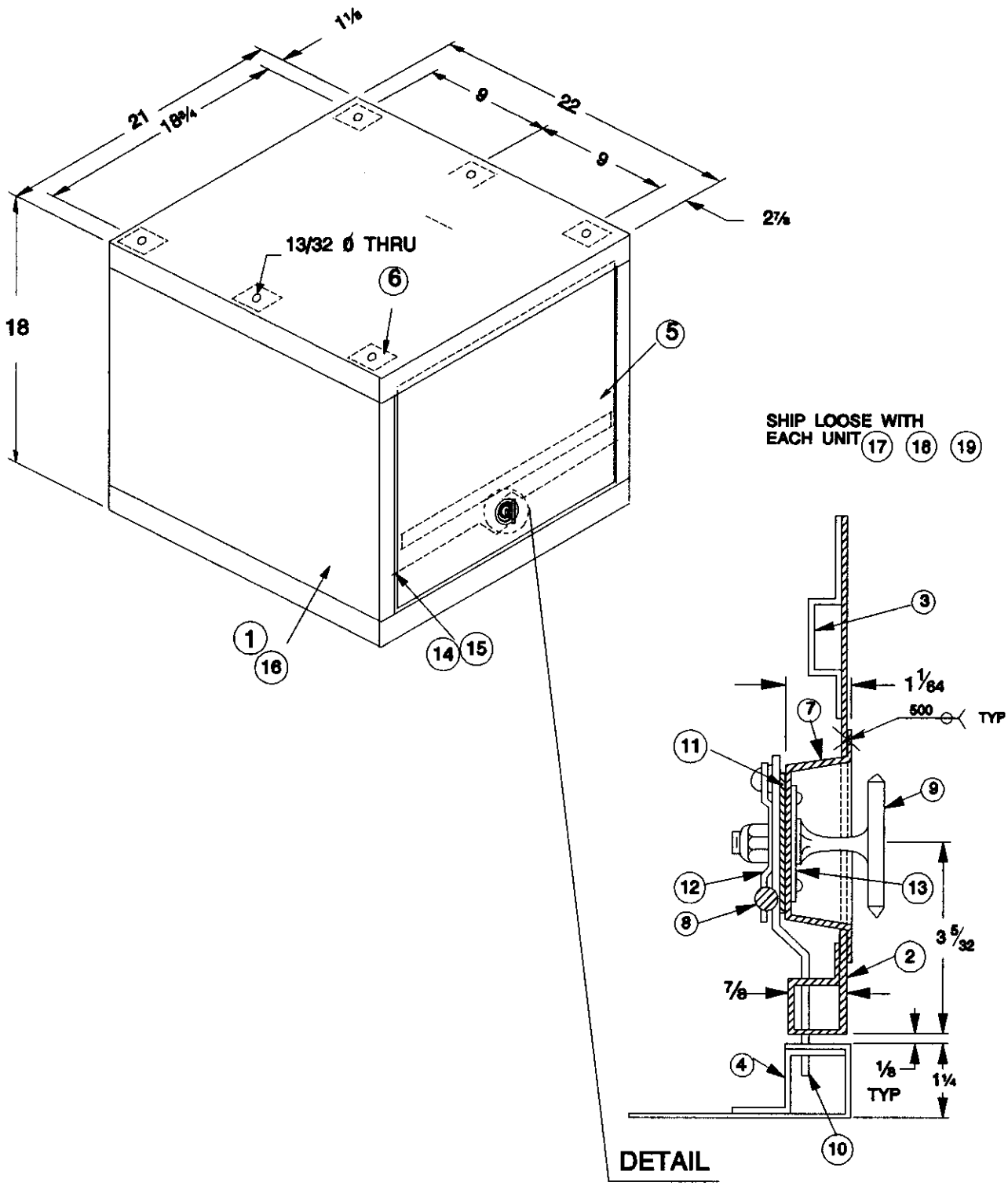

DAMAGE CONTROL EQUIPMENT STOWAGE SKETCH #015

DAMAGE CONTROL LOCKER, VARIOUS EQUIPMENT

Page 1 of 2

LIST OF MATERIAL

NO.	DESCRIPTION	Qty.	MATERIAL
1	LOCKER	1	.063 AL. 5052-H32
2	STIFFENER, DOOR	1	.063 AL. 5052-H32
3	STIFFENER, DOOR, HORZ	1	.063 AL. 5052-H32
4	STIFFENER, LOCKER	4	.063 AL. 5052-H32
5	DOOR	1	.050 AL 5052-H32
6	REINF. PAD 2X2	6	¼ THK ALUM.
7	RECESS CUP	1	.050 ALUM
8	LOCK ROD	2	5/16 Ø SPADE BOLT, STEEL
9	TEE HANDLE	1	S3200-860055, PC# 13
10	LKG DVC PLATE	1	11 GA CRES
11	LKG DVC CAM	1	12 GA CREW
12	LKG DVC STRAP	1	16 GA CRES
13	ESCUTCHEON	1	20 GA CRES
14	DOOR FERRULE	2	HEYCO 58-500-5
15	DOOR/FRAME FERRULE	4	HEYCO 58-500-6
16	BUMPER	4	RUBBER
17	BOLT, H.HD. ⅜-16 1¼L	6	STEEL
18	NUT, SELF-LKG, ⅜-16	6	STEEL
19	WASHER, FLAT, ⅜ STD.	6	STEEL

GENERAL NOTES

1. UNIT APPROVED FOR GRADE "B" SHOCK SUPSHIP BATH APPROVAL SER# 250P/2614 DATED 26 MAR 1991.
2. FOR STOWAGE OF ANY ONE OF THE FOLLOWING DAMAGE CONTROL EQUIPMENT:
   - OBA CANISTER / 1 CARTON
   - LIFE JACKET
   - GAS MASK
   - GAS FREE EQUIPMENT
   - INVESTIGATOR'S EQUIPMENT

DAMAGE CONTROL EQUIPMENT STOWAGE SKETCH #015

DAMAGE CONTROL LOCKER, VARIOUS EQUIPMENT

Page 2 of 2

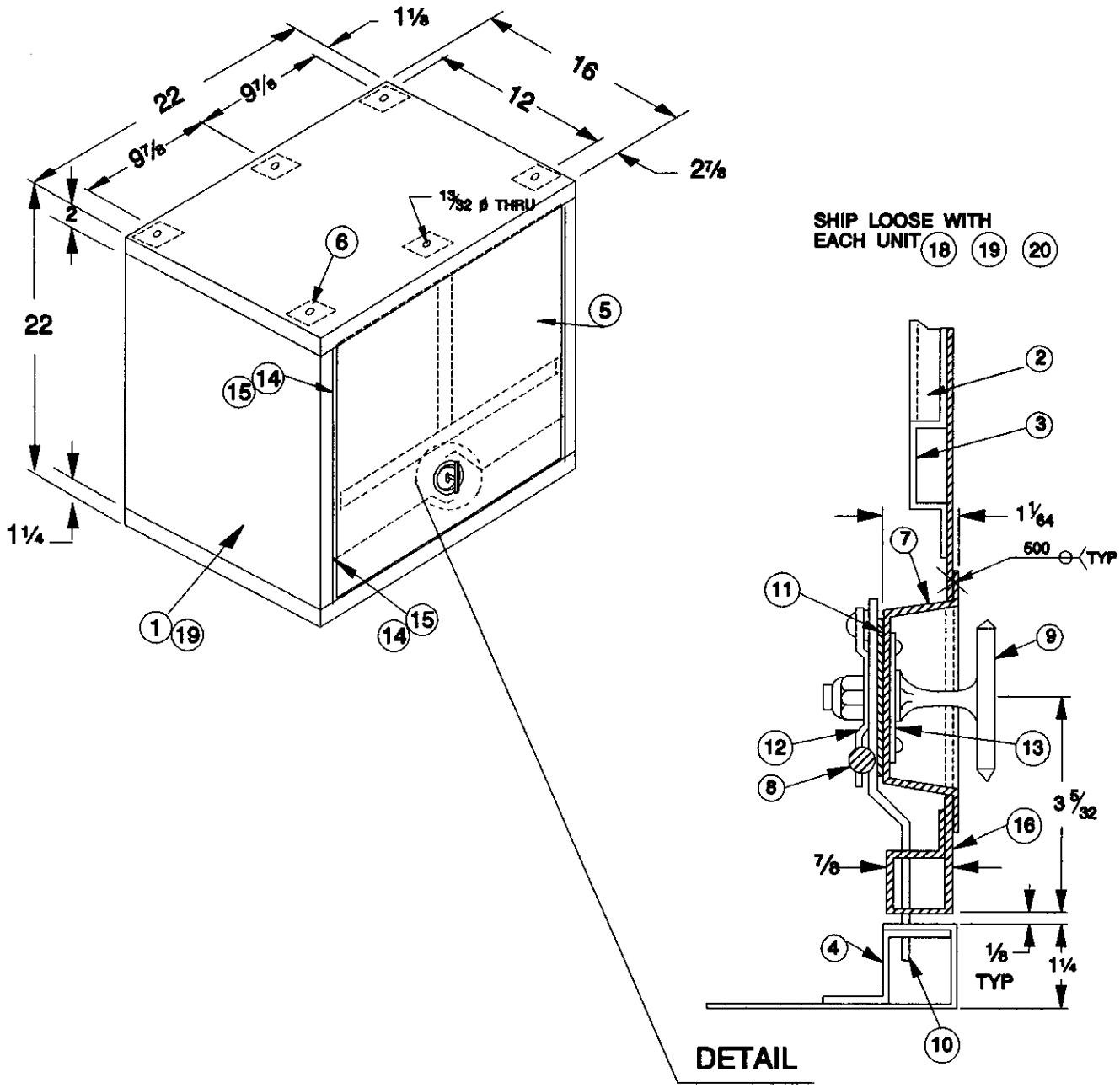

DAMAGE CONTROL EQUIPMENT STOWAGE SKETCH #016

DAMAGE CONTROL LOCKER, VARIOUS EQUIPMENT

Page 1 of 2

LIST OF MATERIAL

NO.	DESCRIPTION	Qty.	MATERIAL
1	LOCKER	1	.063 AL. 5052-H32
2	STIFFENER, DOOR, VERT	1	.063 AL. 5052-H32
3	STIFFENER, DOOR, HORZ	1	.063 AL. 5052-H32
4	STIFFENER, LOCKER	4	.063 AL. 5052-H32
5	DOOR	1	.050 AL 5052-H32
6	REINF. PAD 2X2	6	¼ THK ALUM.
7	RECESS CUP	1	.050 ALUM
8	LOCK ROD	2	5/16 Ø SPADE BOLT, STEEL
9	TEE HANDLE	1	S3200-860055, PC# 13
10	LKG DVC PLATE	1	11 GA CRES
11	LKG DVC CAM	1	12 GA CREW
12	LKG DVC STRAP	1	16 GA CRES
13	ESCUTCHEON	1	20 GA CRES
14	DOOR FERRULE	2	HEYCO 58-500-5
15	DOOR/FRAME FERRULE	4	HEYCO 58-500-6
16	STIFFENER DOOR	4	.050 ALUM 5052-H32
17	BUMPER	4	RUBBER
18	BOLT, H.HD. ⅜-16 1¼L	6	STEEL
19	NUT, SELF-LKG, ⅜-16	6	STEEL
20	WASHER, FLAT, ⅜ STD.	6	STEEL

GENERAL NOTES

1. UNIT APPROVED FOR GRADE "B" SHOCK SUPSHIP BATH APPROVAL SER# 250P/2614 DATED 26 MAR 1991.
2. FOR STOWAGE OF ANY ONE OF THE FOLLOWING DAMAGE CONTROL EQUIPMENT:
   - OBA CANISTER / 1 CARTON
   - LIFE JACKET
   - GAS MASK
   - GAS FREE EQUIPMENT
   - INVESTIGATOR'S EQUIPMENT

DAMAGE CONTROL EQUIPMENT STOWAGE SKETCH #016

DAMAGE CONTROL LOCKER, VARIOUS EQUIPMENT

Page 2 of 2

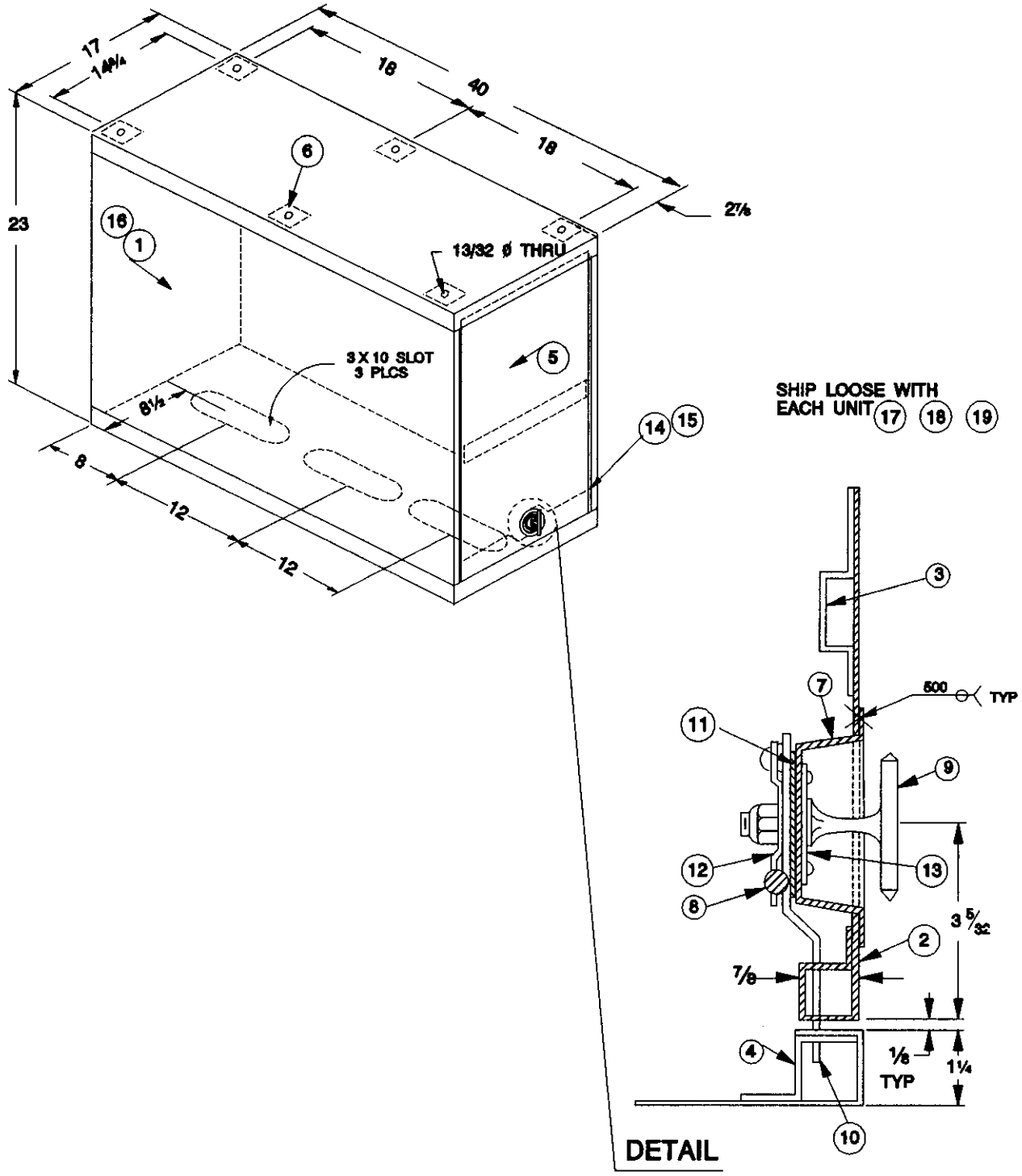

DAMAGE CONTROL EQUIPMENT STOWAGE SKETCH #017

DAMAGE CONTROL LOCKER, VARIOUS EQUIPMENT

Page 1 of 2

LIST OF MATERIAL

NO.	DESCRIPTION	Qty.	MATERIAL
1	LOCKER	1	.063 AL. 5052-H32
2	STIFFENER, DOOR	1	.063 AL. 5052-H32
3	STIFFENER, DOOR, HORZ	1	.063 AL. 5052-H32
4	STIFFENER, LOCKER	4	.063 AL. 5052-H32
5	DOOR	1	.050 AL 5052-H32
6	REINF. PAD 2X2	6	¼ THK ALUM.
7	RECESS CUP	1	.050 ALUM
8	LOCK ROD	2	5/16 Ø SPADE BOLT, STEEL
9	TEE HANDLE	1	S3200-860055, PC# 13
10	LKG DVC PLATE	1	11 GA CRES
11	LKG DVC CAM	1	12 GA CREW
12	LKG DVC STRAP	1	16 GA CRES
13	ESCUTCHEON	1	20 GA CRES
14	DOOR FERRULE	2	HEYCO 58-500-5
15	DOOR/FRAME FERRULE	4	HEYCO 58-500-6
16	BUMPER	4	RUBBER
17	BOLT, H.HD. ⅜-16 1¼L	6	STEEL
18	NUT, SELF-LKG, ⅜-16	6	STEEL
19	WASHER, FLAT, ⅜ STD.	6	STEEL

GENERAL NOTES

1. UNIT APPROVED FOR GRADE "B" SHOCK SUPSHIP BATH APPROVAL SER# 250P/2614 DATED 26 MAR 1991.
2. FOR STOWAGE OF ANY ONE OF THE FOLLOWING DAMAGE CONTROL EQUIPMENT:
   - OBA CANISTER / 1 CARTON
   - LIFE JACKET
   - GAS MASK
   - GAS FREE EQUIPMENT
   - INVESTIGATOR'S EQUIPMENT

DAMAGE CONTROL EQUIPMENT STOWAGE SKETCH #017

DAMAGE CONTROL LOCKER, VARIOUS EQUIPMENT

Page 2 of 2

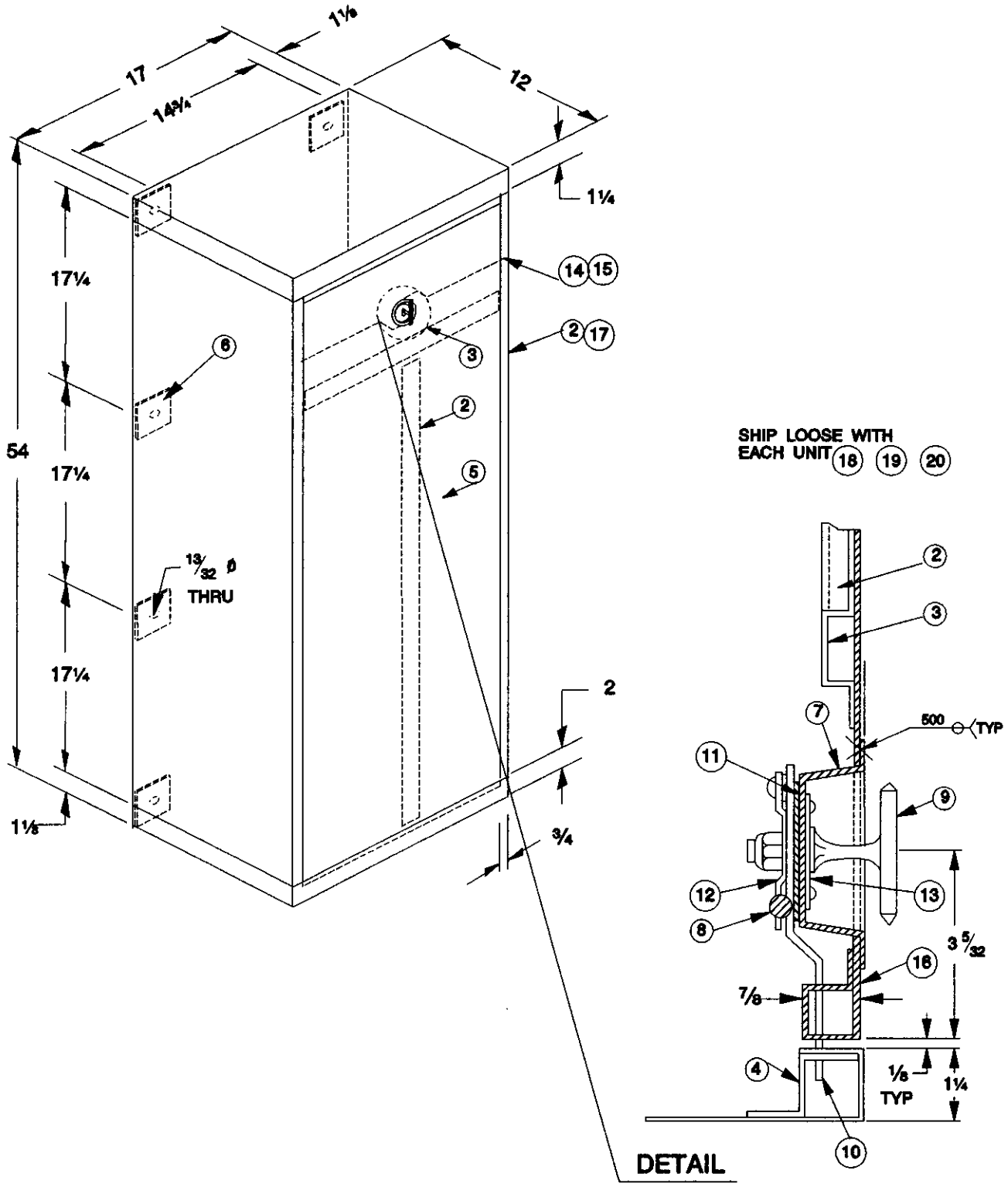

DAMAGE CONTROL EQUIPMENT STOWAGE SKETCH #018

DAMAGE CONTROL LOCKER, VARIOUS EQUIPMENT

Page 1 of 2

LIST OF MATERIAL

NO.	DESCRIPTION	Qty.	MATERIAL
1	LOCKER	1	.063 AL. 5052-H32
2	STIFFENER, DOOR, VERT	1	.063 AL. 5052-H32
3	STIFFENER, DOOR, HORZ	1	.063 AL. 5052-H32
4	STIFFENER, LOCKER	4	.063 AL. 5052-H32
5	DOOR	1	.050 AL 5052-H32
6	REINF. PAD 2X2	8	¼ THK ALUM.
7	RECESS CUP	1	.050 ALUM
8	LOCK ROD	2	5/16 Ø SPADE BOLT, STEEL
9	TEE HANDLE	1	S3200-860055, PC# 13
10	LKG DVC PLATE	1	11 GA CRES
11	LKG DVC CAM	1	12 GA CREW
12	LKG DVC STRAP	1	16 GA CRES
13	ESCUTCHEON	1	20 GA CRES
14	DOOR FERRULE	2	HEYCO 58-500-5
15	DOOR/FRAME FERRULE	4	HEYCO 58-500-6
16	STIFFENER DOOR	4	.050 ALUM 5052-H32
17	BUMPER	4	RUBBER
18	BOLT, H.HD. ⅜-16	8	STEEL 1¼L
19	NUT, SELF-LKG, ⅜-16	8	STEEL
20	WASHER, FLAT, ⅜ STD.	8	STEEL

GENERAL NOTES

1. UNIT APPROVED FOR GRADE "B" SHOCK SUPSHIP BATH APPROVAL SER# 250P/2614 DATED 26 MAR 1991.
2. FOR STOWAGE OF ANY ONE OF THE FOLLOWING DAMAGE CONTROL EQUIPMENT:
   - OBA CANISTER / 1 CARTON
   - LIFE JACKET
   - GAS MASK
   - GAS FREE EQUIPMENT
   - INVESTIGATOR'S EQUIPMENT

DAMAGE CONTROL EQUIPMENT STOWAGE SKETCH #018

DAMAGE CONTROL LOCKER, VARIOUS EQUIPMENT

Page 2 of 2

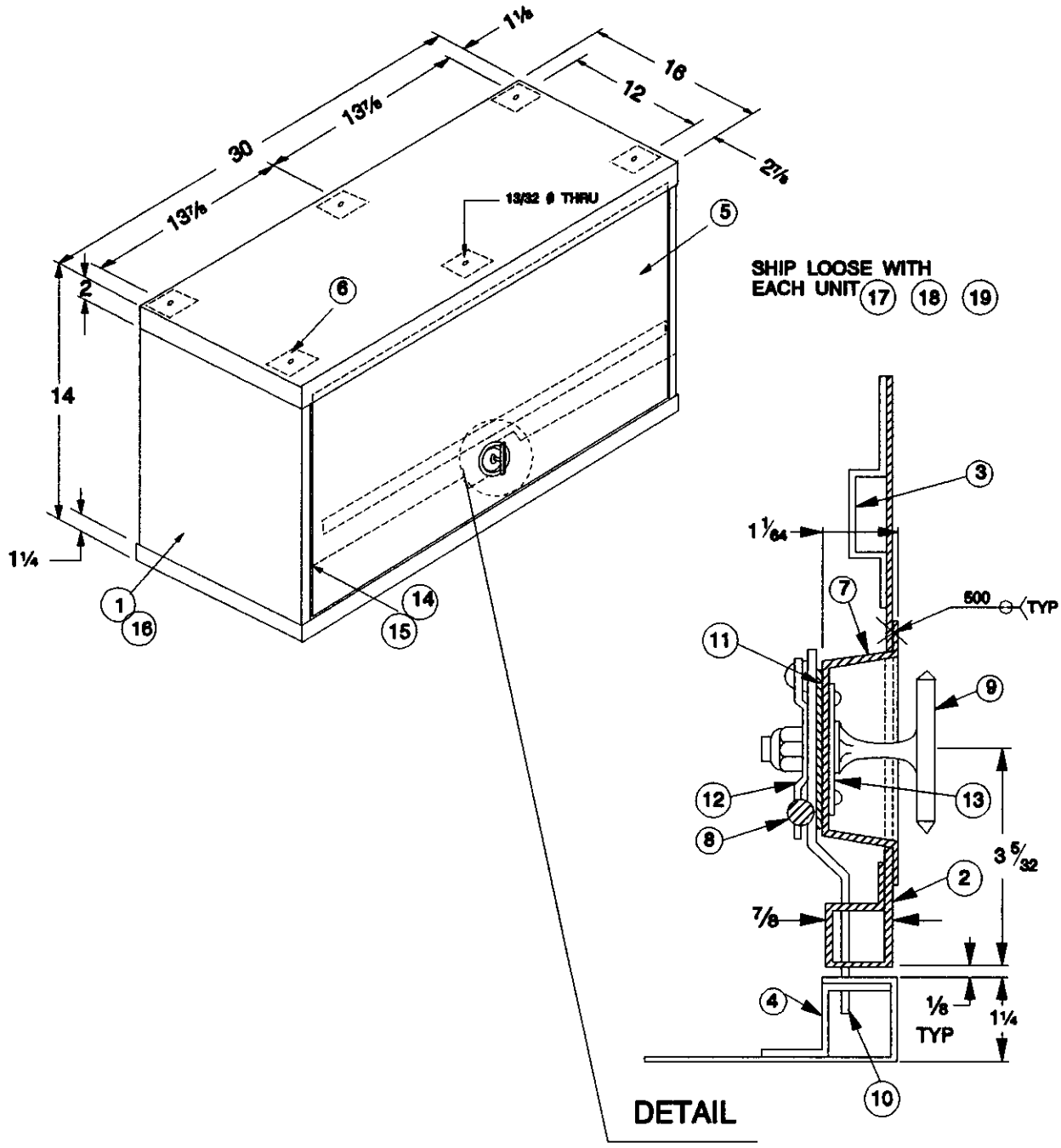

DAMAGE CONTROL EQUIPMENT STOWAGE SKETCH #019

DAMAGE CONTROL LOCKER, VARIOUS EQUIPMENT

Page 1 of 2

LIST OF MATERIAL

NO.	DESCRIPTION	Qty.	MATERIAL
1	LOCKER	1	.063 AL. 5052-H32
2	STIFFENER, DOOR	4	.050 ALUM
3	STIFFENER, DOOR, HORZ	1	.063 AL. 5052-H32
4	STIFFENER, LOCKER	4	.063 AL. 5052-H32
5	DOOR	1	.050 AL 5052-H32
6	REINF. PAD 2X2	6	¼ THK ALUM.
7	RECESS CUP	1	.050 ALUM
8	LOCK ROD	2	5/16 Ø SPADE BOLT, STEEL
9	TEE HANDLE	1	S3200-860055, PC# 13
10	LKG DVC PLATE	1	11 GA CRES
11	LKG DVC CAM	1	12 GA CREW
12	LKG DVC STRAP	1	16 GA CRES
13	ESCUTCHEON	1	20 GA CRES
14	DOOR FERRULE	2	HEYCO 58-500-5
15	DOOR/FRAME FERRULE	4	HEYCO 58-500-6
16	BUMPER	4	RUBBER
17	BOLT, H.HD. ⅜-16	6	STEEL 1¼L
18	NUT, SELF-LKG, ⅜-16	6	STEEL
19	WASHER, FLAT, ⅜ STD.	6	STEEL

GENERAL NOTES

1. UNIT APPROVED FOR GRADE "B" SHOCK SUPSHIP BATH APPROVAL SER# 250P/2614 DATED 26 MAR 1991.
2. FOR STOWAGE OF ANY ONE OF THE FOLLOWING DAMAGE CONTROL EQUIPMENT:
   - OBA CANISTER / 1 CARTON
   - LIFE JACKET
   - GAS MASK
   - GAS FREE EQUIPMENT
   - INVESTIGATOR'S EQUIPMENT

DAMAGE CONTROL EQUIPMENT STOWAGE SKETCH #019

DAMAGE CONTROL LOCKER, VARIOUS EQUIPMENT

Page 2 of 2

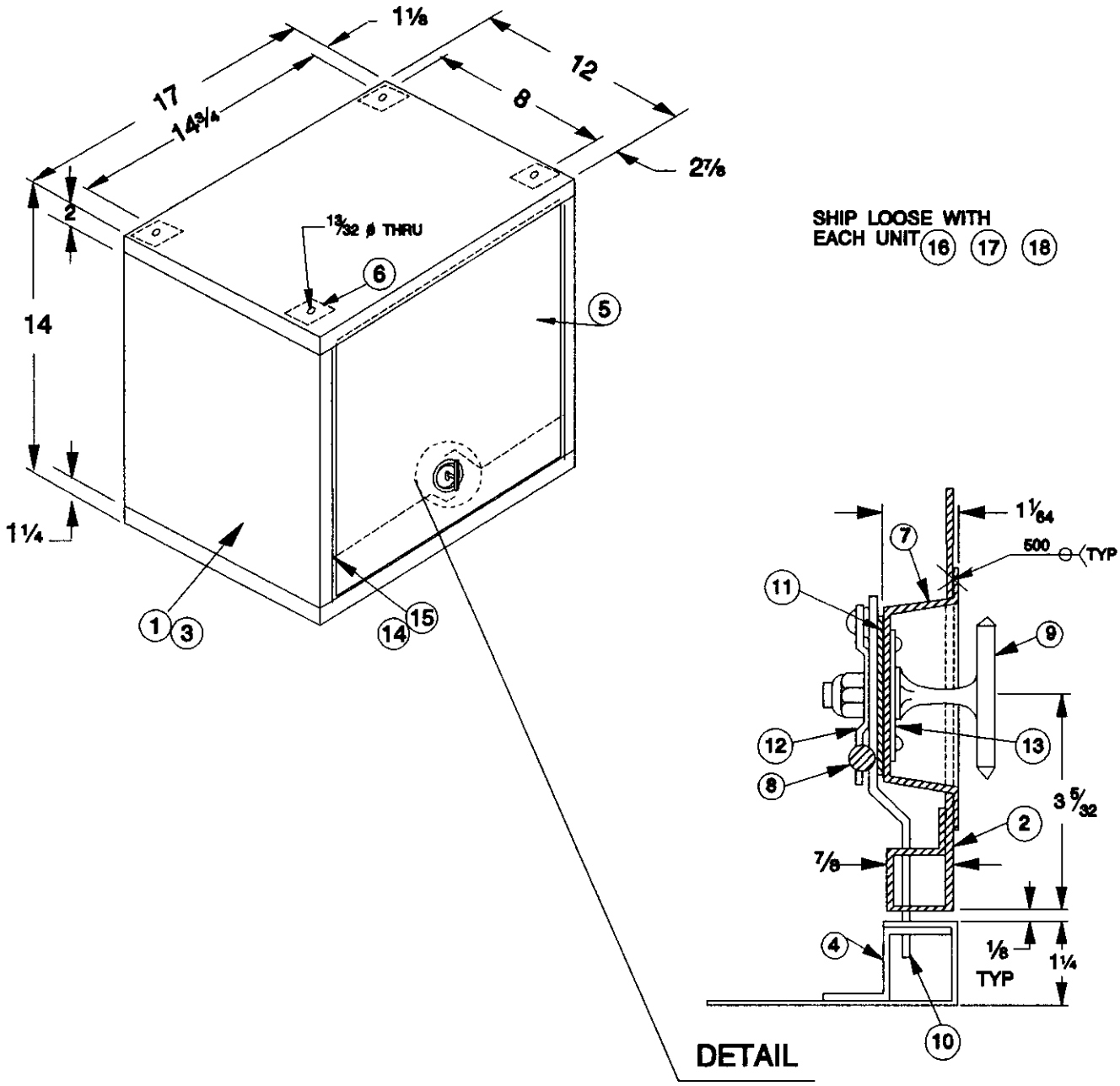

DAMAGE CONTROL EQUIPMENT STOWAGE SKETCH #020

DAMAGE CONTROL LOCKER, VARIOUS EQUIPMENT

Page 1 of 2

LIST OF MATERIAL

NO.	DESCRIPTION	Qty.	MATERIAL
1	LOCKER	1	.063 AL. 5052-H32
2	STIFFENER, DOOR	4	.050 AL 5052-H32
3	BUMPER	4	RUBBER
4	STIFFENER, LOCKER	4	.063 AL. 5052-H32
5	DOOR	1	.050 AL 5052-H32
6	REINF. PAD 2X2	4	¼ THK ALUM.
7	RECESS CUP	1	.050 ALUM
8	LOCK ROD	2	5/16 Ø SPADE BOLT, STEEL
9	TEE HANDLE	1	S3200-860055, PC# 13
10	LKG DVC PLATE	1	11 GA CRES
11	LKG DVC CAM	1	12 GA CREW
12	LKG DVC STRAP	1	16 GA CRES
13	ESCUTCHEON	1	20 GA CRES
14	DOOR FERRULE	2	HEYCO 58-500-5
15	DOOR/FRAME FERRULE	4	HEYCO 58-500-6
16	BOLT, H.HD. ⅜-16	4	STEEL 1¼L
17	NUT, SELF-LKG, ⅜-16	4	STEEL
18	WASHER, FLAT, ⅜ STD.	4	STEEL

GENERAL NOTES

1. UNIT APPROVED FOR GRADE "B" SHOCK SUPSHIP BATH APPROVAL SER# 250P/2614 DATED 26 MAR 1991.
2. FOR STOWAGE OF ANY ONE OF THE FOLLOWING DAMAGE CONTROL EQUIPMENT:
   - OBA CANISTER / 1 CARTON
   - LIFE JACKET
   - GAS MASK
   - GAS FREE EQUIPMENT
   - INVESTIGATOR'S EQUIPMENT

DAMAGE CONTROL EQUIPMENT STOWAGE SKETCH #020

DAMAGE CONTROL LOCKER, VARIOUS EQUIPMENT

Page 2 of 2

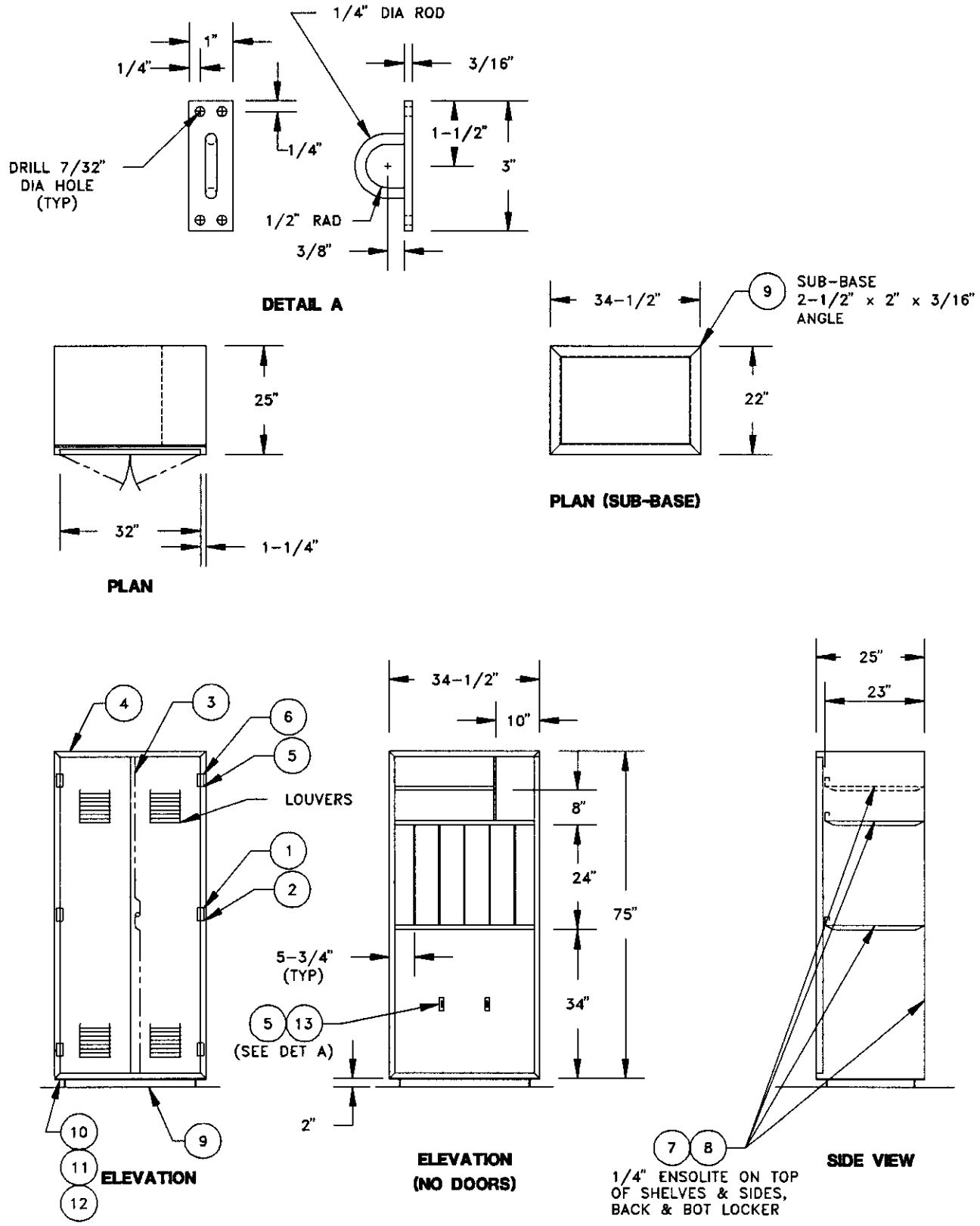

DAMAGE CONTROL EQUIPMENT STOWAGE SKETCH # 021

DEWATERING KIT STOWAGE LOCKER
PAGE 1 OF 3

DCES021

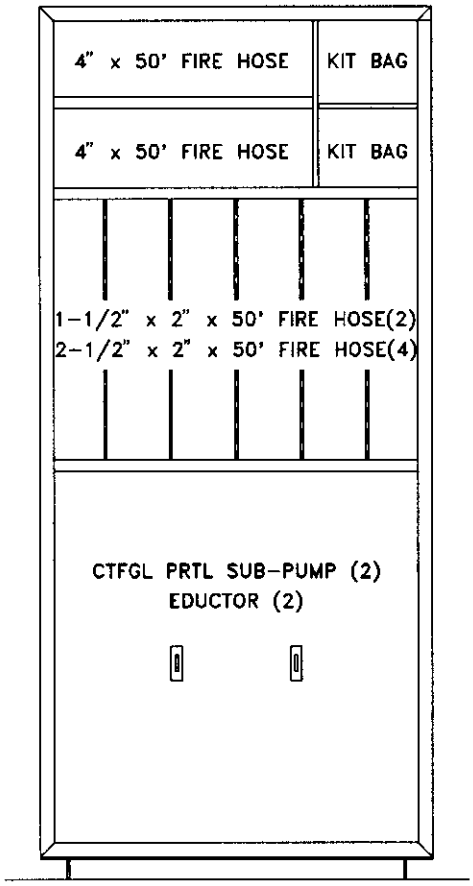

DAMAGE CONTROL EQUIPMENT STOWAGE SKETCH # 021

DEWATERING KIT STOWAGE LOCKER
PAGE 2 OF 3

DCE5021B

	ASSY	LIST OF MATERIAL			
QTY	PART NO.	NAME	MATERIAL	REFERENCES	REMARKS
6	1	HINGE, 2" x 1-5/8"	STL CAD PLTD	NN STOCK 17-15-302	
6	2	ANTI-RATTLER	RUBBER PURE GUM		
1	3	LOCKING DEVICE	SEE DET DWG	ASSY64, REF 6	
1	4	LOCKER	SEE DET DWG	REF 5	
36	5	HUCK RIVET SELF PLUGGING BLIND NO. P-6-D	ALUMINUM		
12	6	HUCK COMMERCIAL LOCK BOLT NO. CLPB F6-2	ALUMINUM		
AS REQ'D	7	1/4" ENSOLITE	TY III RUBBER		MIL-P-15280
AS REQ'D	8	BONDING AGENT	CEMENT		MIL-A-24179
12LF	9	ANGLE, BASE, 2-1/2" x 2" x 3/16"	MED STL		
24	10	BOLT, 1/4"-20UNC 2A	STL (ZINC COAT)		L-3/4"
24	11	NUT, HEX 1/4"-20UNC 2B	STL (ZINC COAT)		TACK WELD TO PT # 9 IN SHOP
24	12	WASHER, LOCK	STL (ZINC COAT)		
6	13	LASHING STAPLE	MED STL		SEE DETAIL D

DAMAGE CONTROL EQUIPMENT STOWAGE SKETCH # 021

DEWATERING KIT STOWAGE LOCKER
PAGE 3 OF 3

DCE5021C

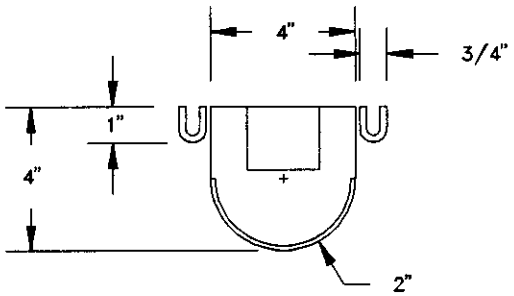

PLAN

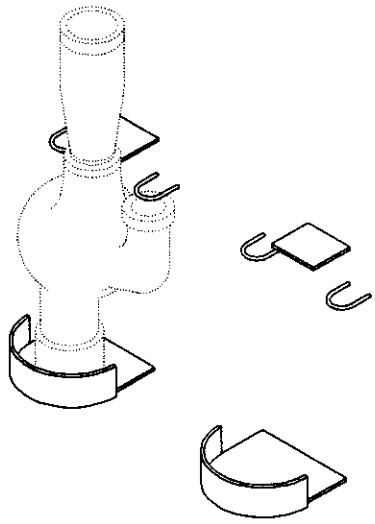

ISOMETRIC VIEW

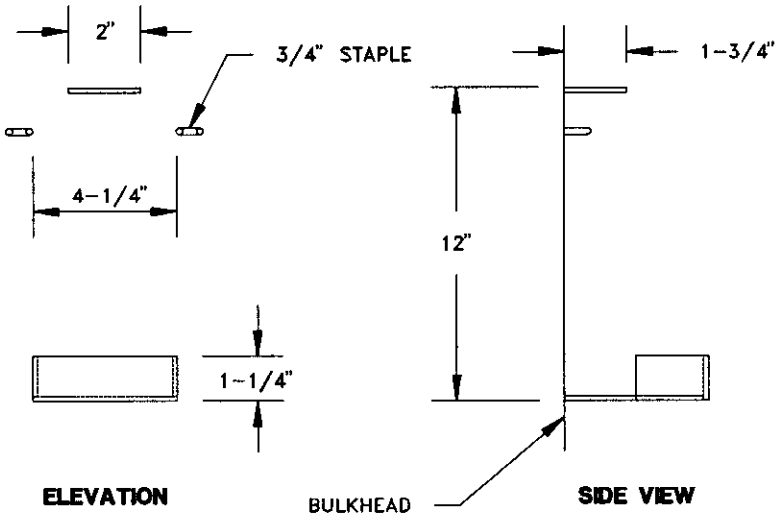

ELEVATION

SIDE VIEW

DAMAGE CONTROL EQUIPMENT STOWAGE SKETCH # 022

EDUCTOR, (1-1/2")
VERTICAL STOWAGE BRACKET

DCES022

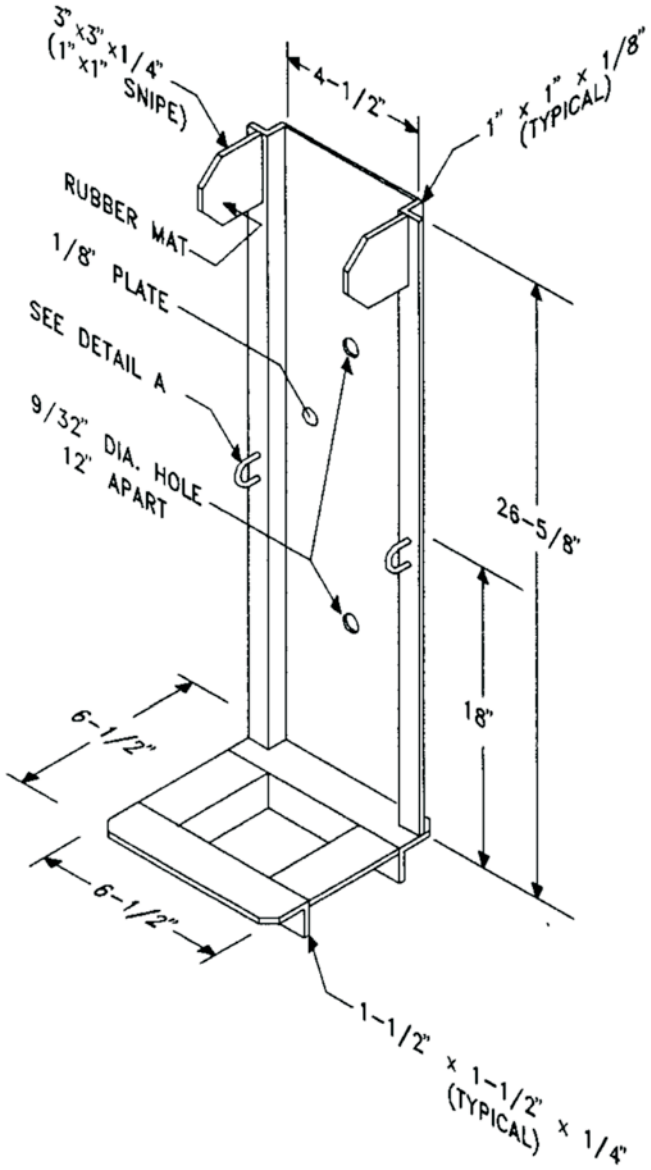

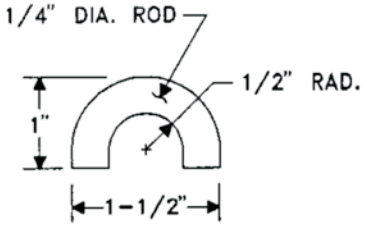

DETAIL A

DAMAGE CONTROL EQUIPMENT STOWAGE SKETCH # 023

EDUCTOR, (1-1/2") VERTICAL STOWAGE RACK

DCES023

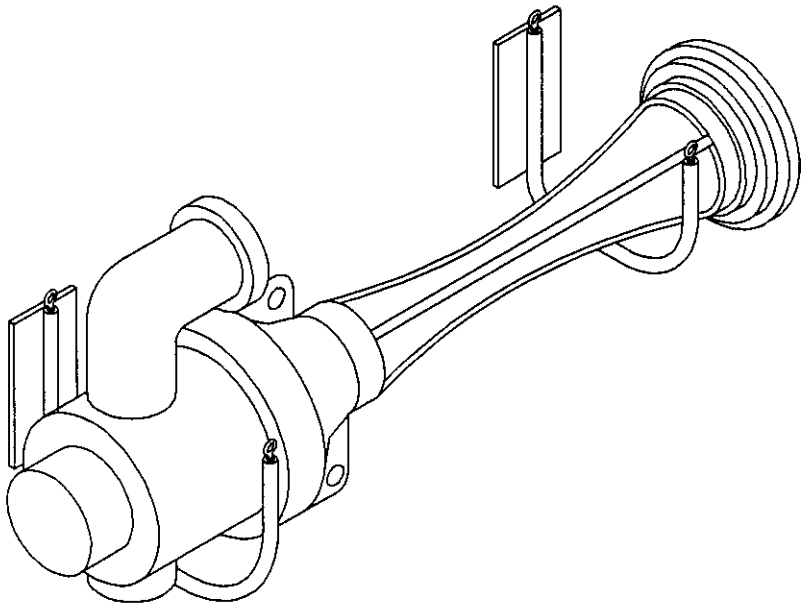

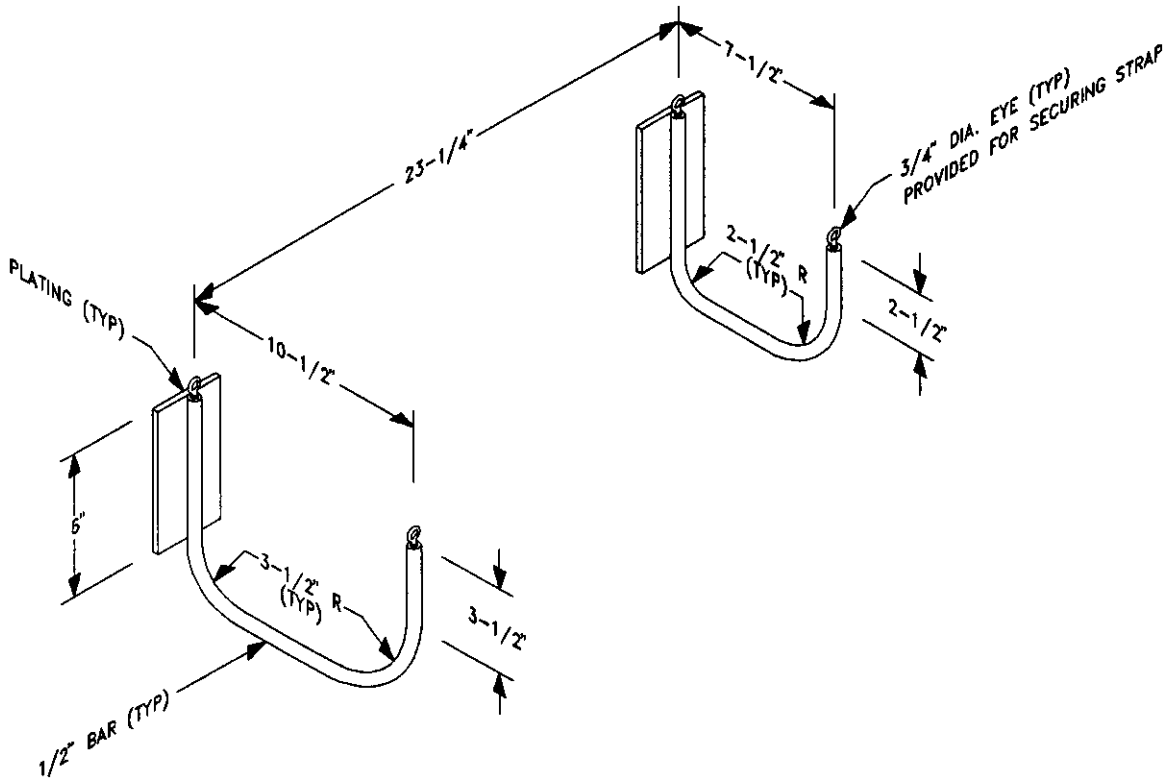

DAMAGE CONTROL EQUIPMENT STOWAGE SKETCH # 024

EDUCTOR, (2-1/2") PERI-JET
HORIZONTAL STOWAGE

DCES024

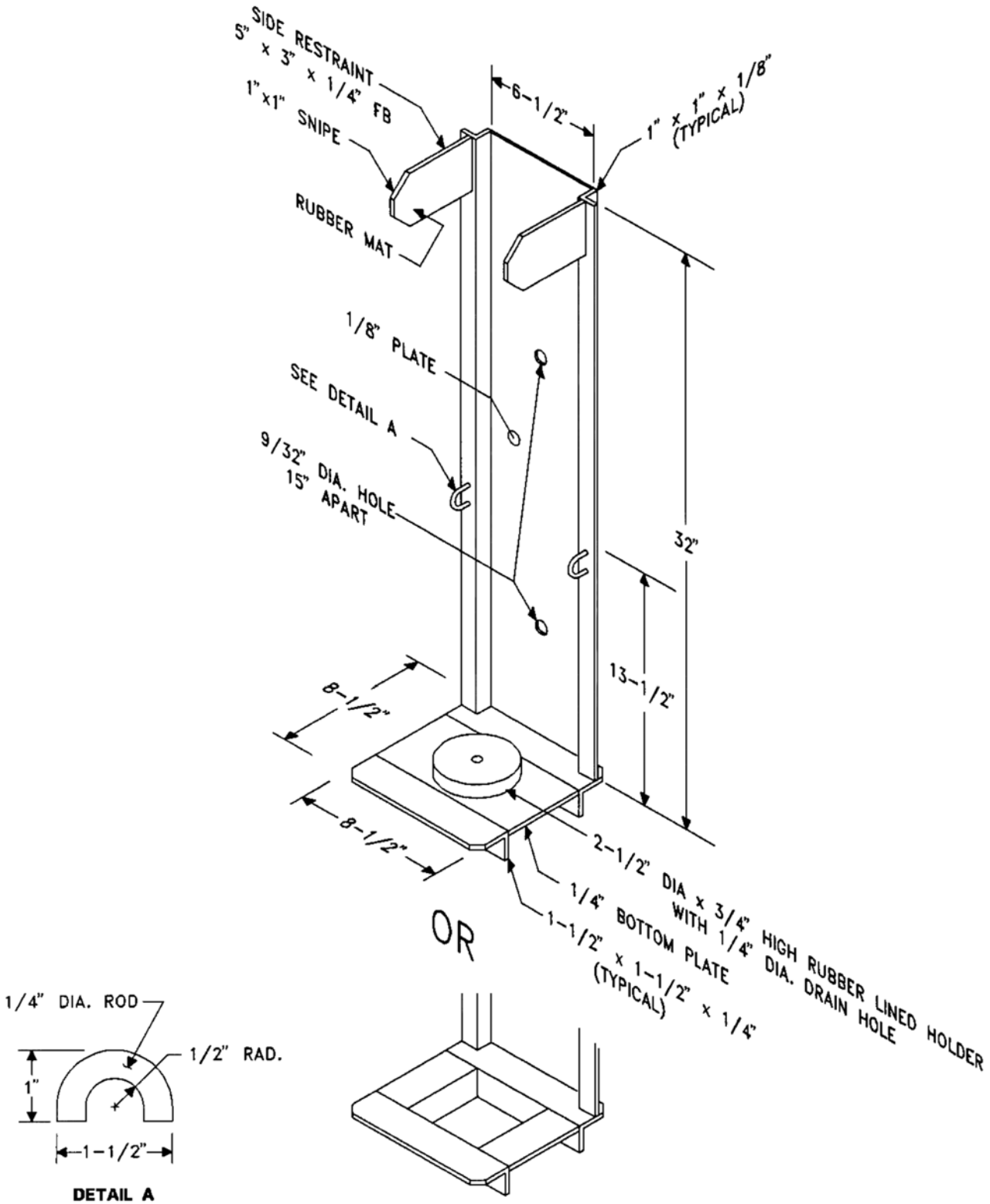

DAMAGE CONTROL EQUIPMENT STOWAGE SKETCH # 025

EDUCTOR, (2-1/2") PERI-JET VERTICAL STOWAGE RACK

DCES025

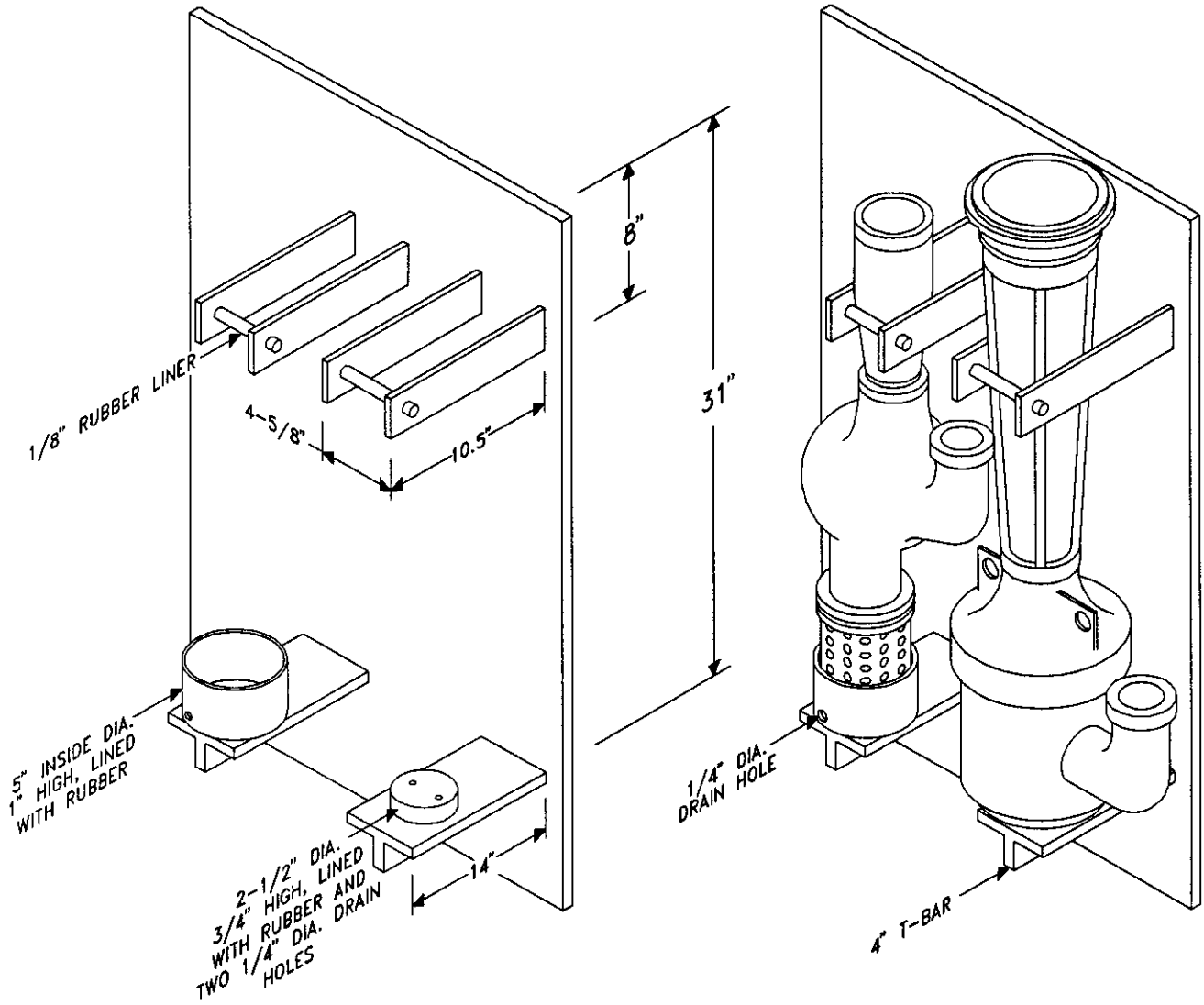

DAMAGE CONTROL EQUIPMENT STOWAGE SKETCH # 026

EDUCTOR/PERI-JET, (1-1/2" / 2-1/2")
VERTICAL STOWAGE RACK

DCES026

TUBEAXIAL FAN STOWAGE

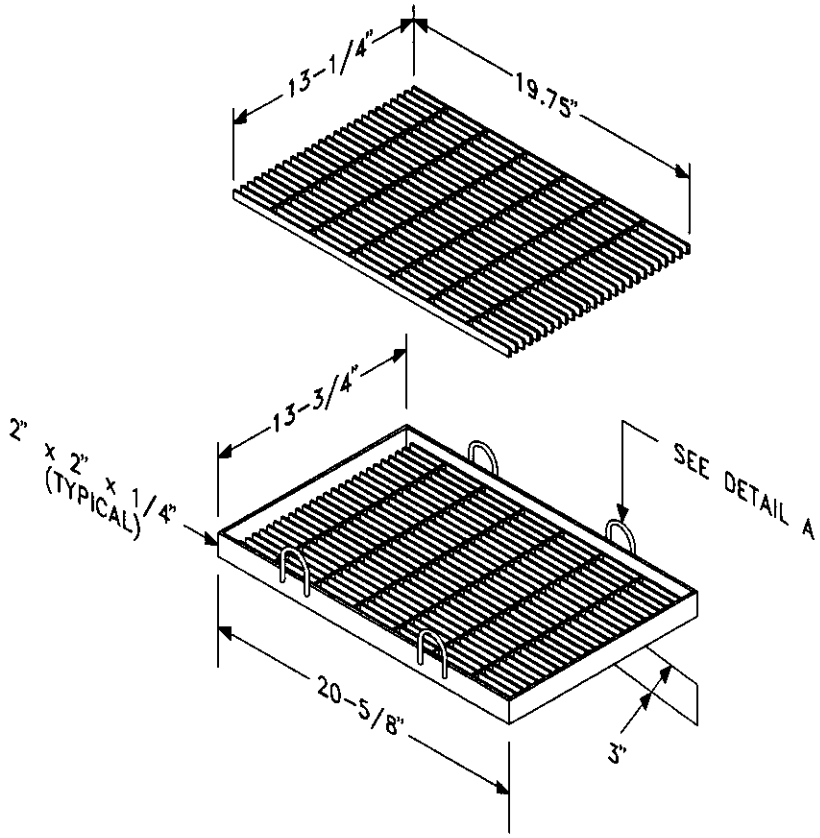

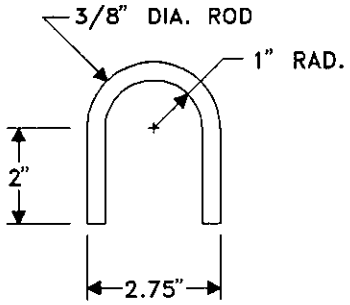

DETAIL A

DAMAGE CONTROL EQUIPMENT STOWAGE SKETCH # 027

FAN STOWAGE, (DCRS), TUBEAXIAL BHD MOUNTED (GRATING)

DCES027

RED DEVIL FAN STOWAGE

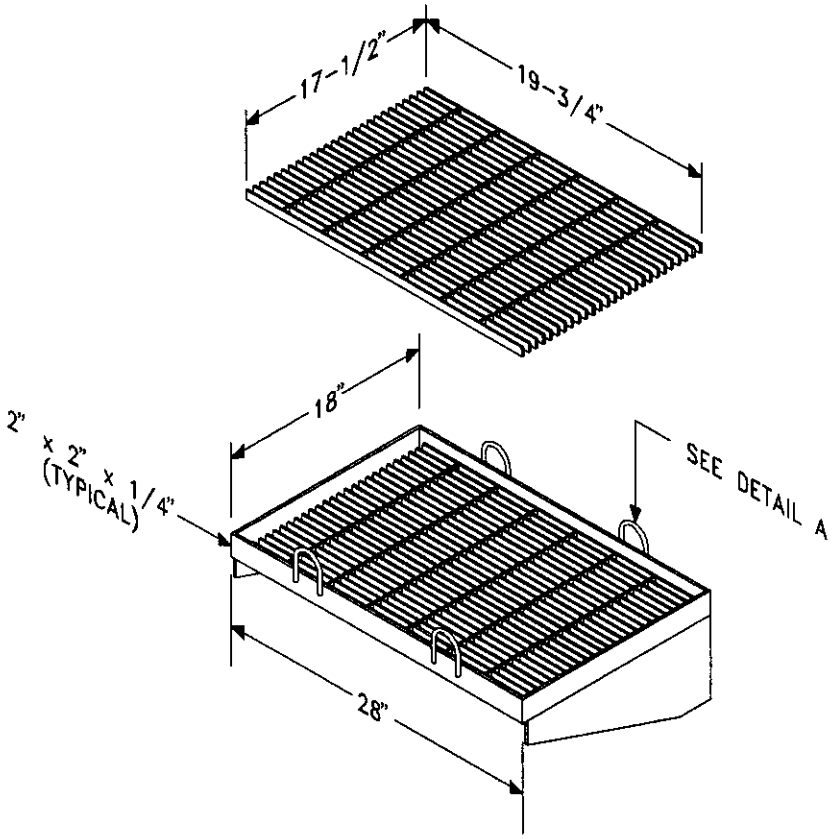

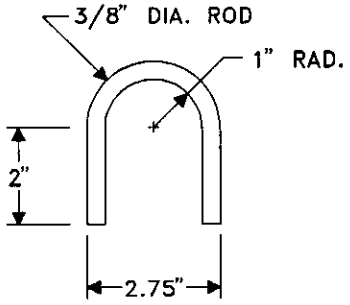

DETAIL A

DAMAGE CONTROL EQUIPMENT STOWAGE SKETCH # 028

FAN STOWAGE RED DEVIL
BHD MOUNTED (GRATING)

DCES028

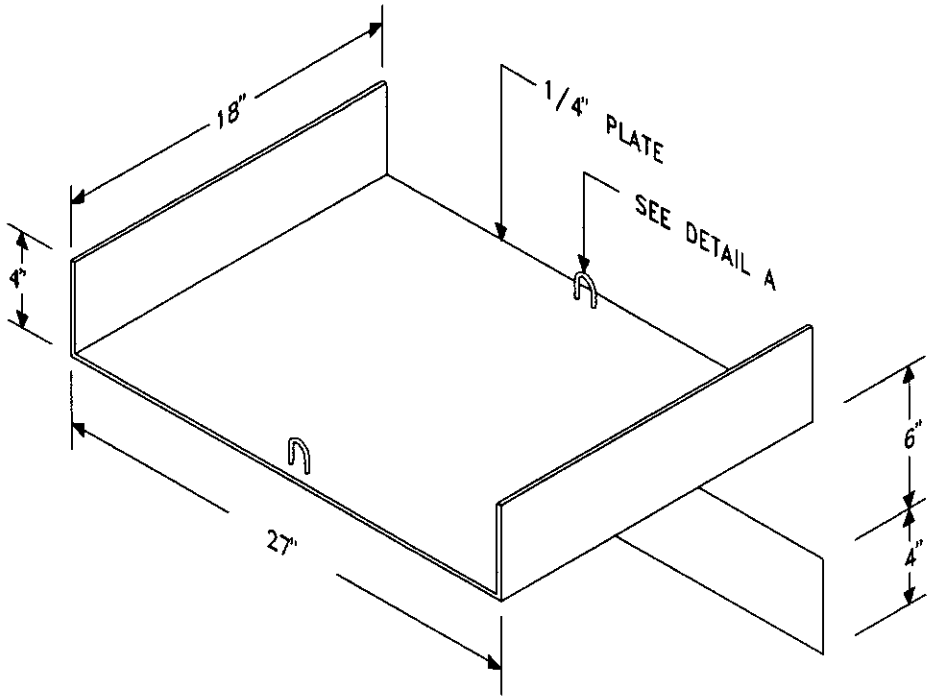

RED DEVIL FAN STOWAGE (BHD MOUNTED)

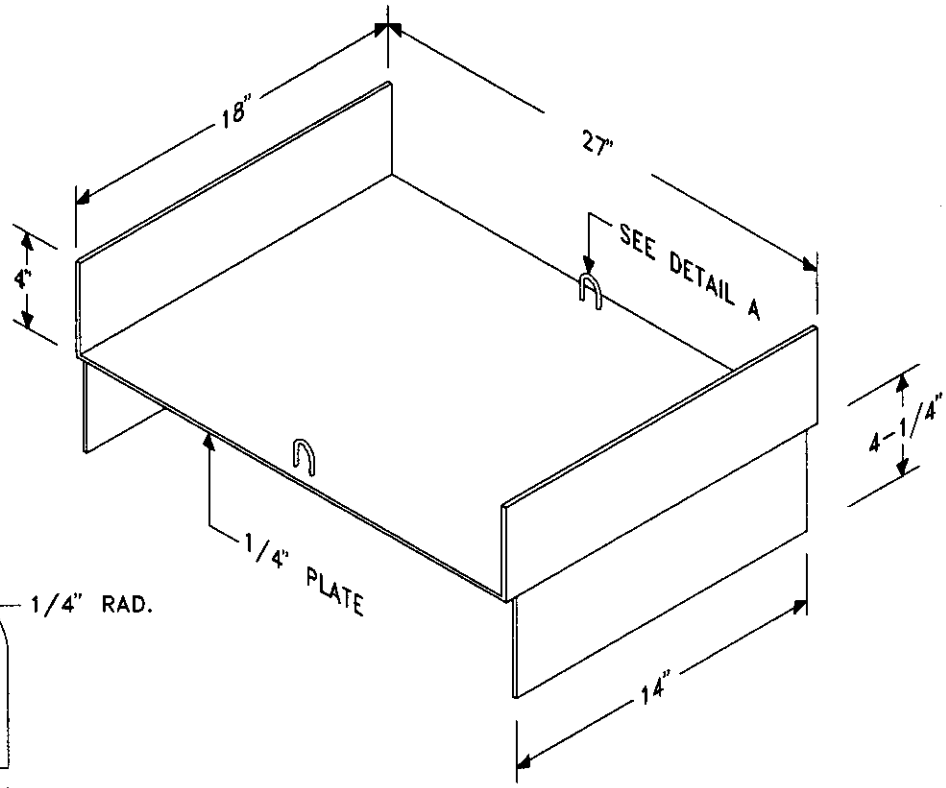

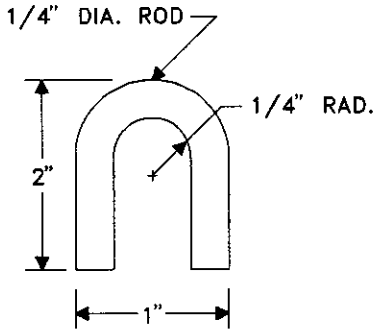

DETAIL A

RED DEVIL FAN STOWAGE (DECK MOUNTED)

DAMAGE CONTROL EQUIPMENT STOWAGE SKETCH # 029

FAN STOWAGE RED DEVIL
BHD/DK MOUNTED (PLATE)

DCES029

RED DEVIL FAN STOWAGE

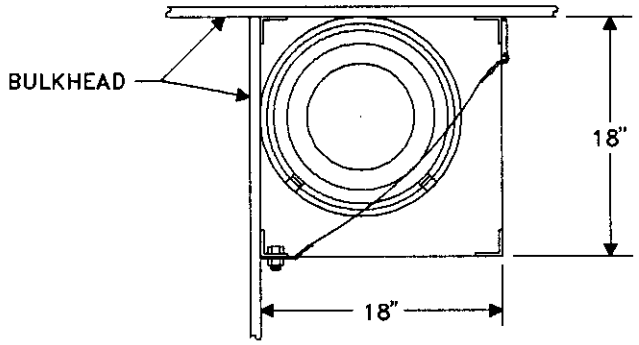

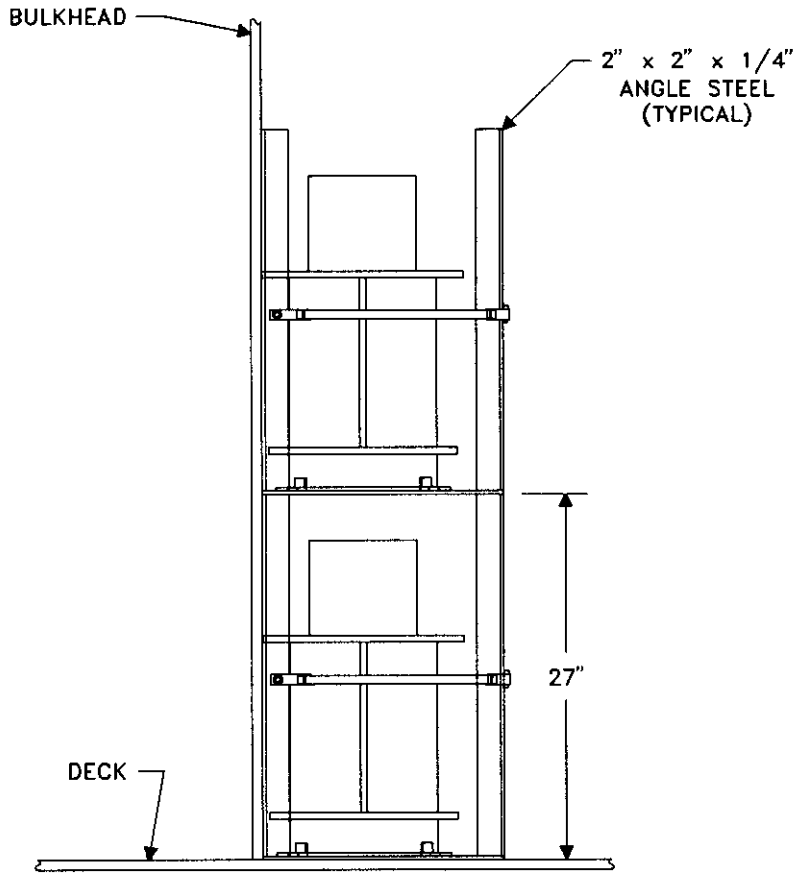

DAMAGE CONTROL EQUIPMENT STOWAGE SKETCH # 030

FAN STOWAGE RED DEVIL
VERTICAL POSITION

DCES030

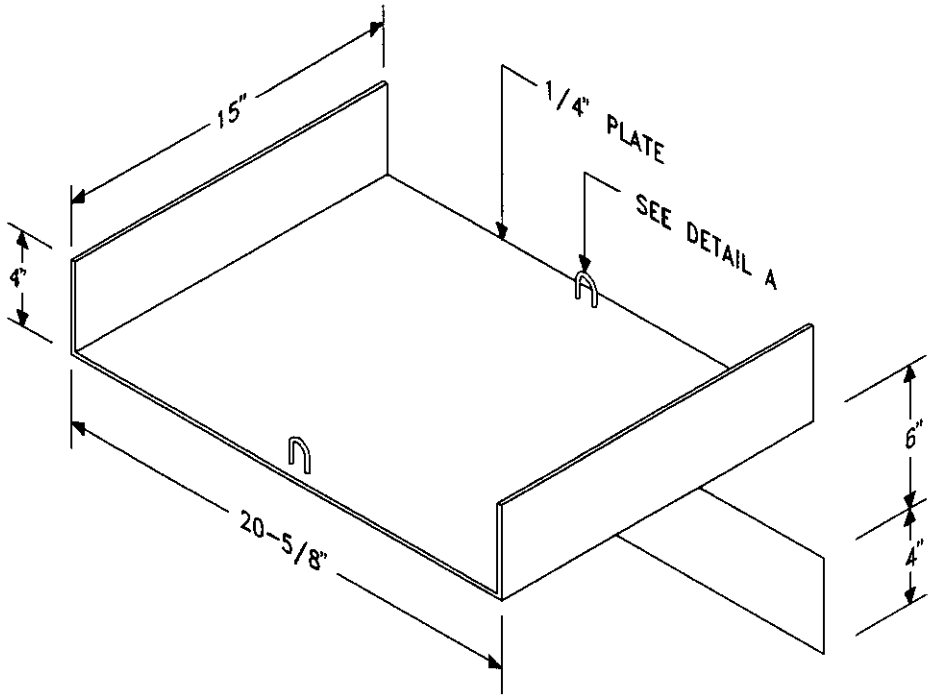

TUBEAXIAL FAN STOWAGE (BHD MOUNTED)

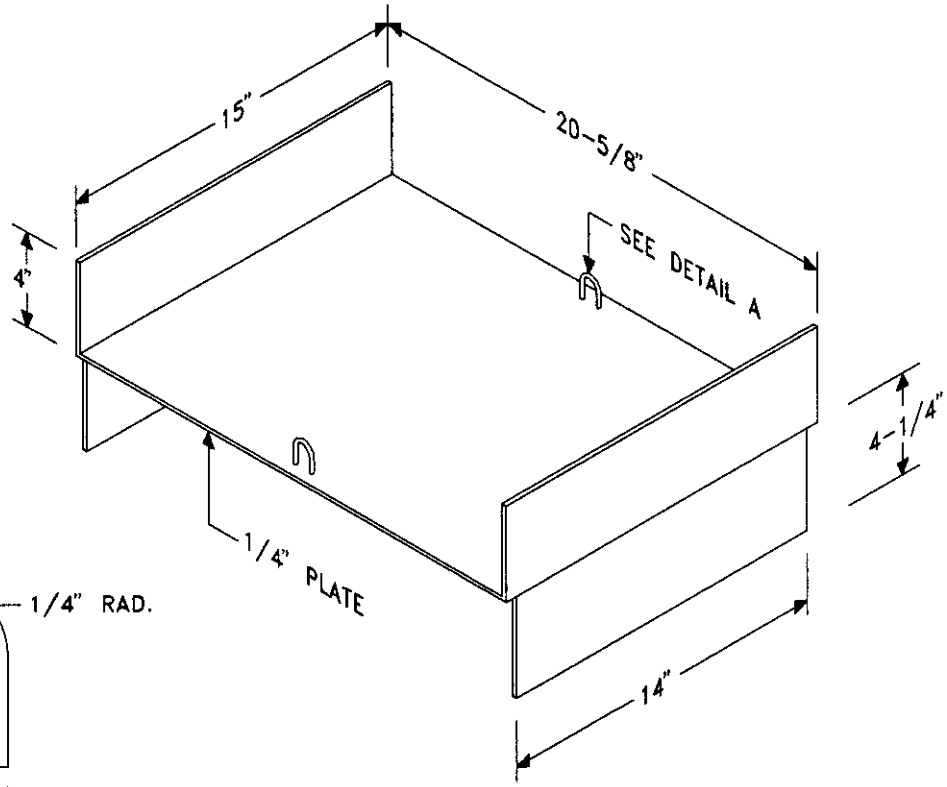

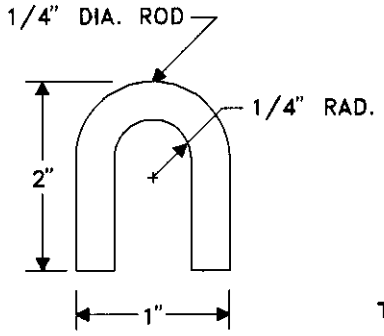

DETAIL A

TUBEAXIAL FAN STOWAGE (DECK MOUNTED)

DAMAGE CONTROL EQUIPMENT STOWAGE SKETCH # 031

FAN STOWAGE (PASSAGEWAY) TUBEAXIAL BHD/DK MOUNTED (PLATE)

DCES031

WATER DRIVEN FAN STOWAGE

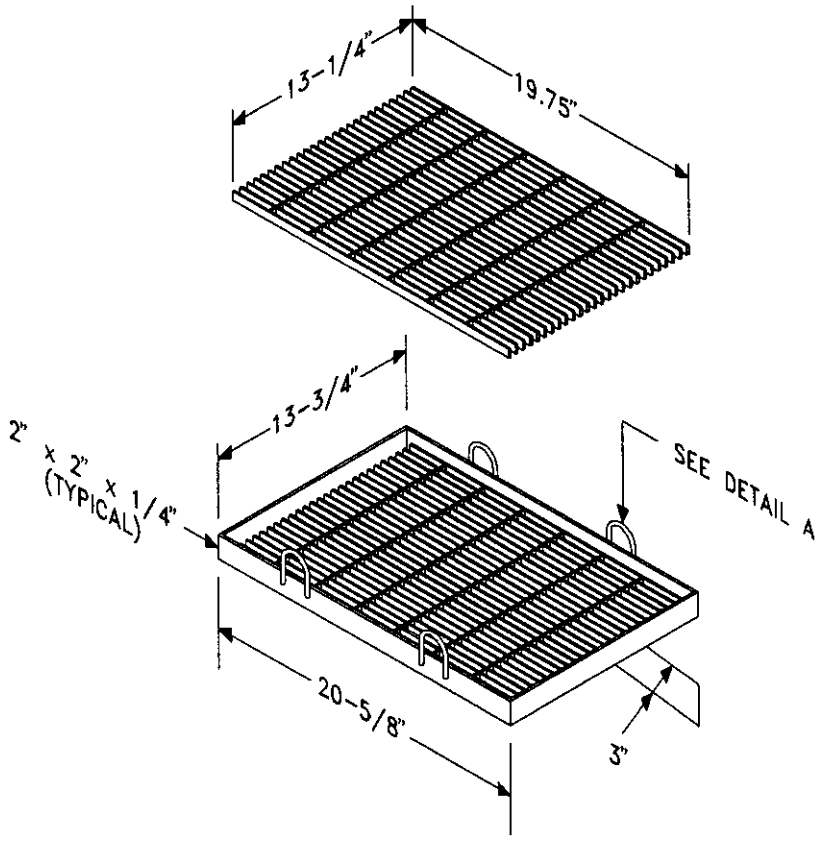

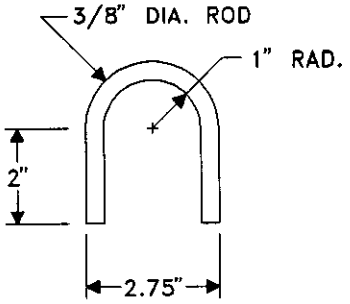

DETAIL A

DAMAGE CONTROL EQUIPMENT STOWAGE SKETCH # 032

FAN STOWAGE (DCRS) WATER DRIVEN BHD MOUNTED (GRATING)

DCES032

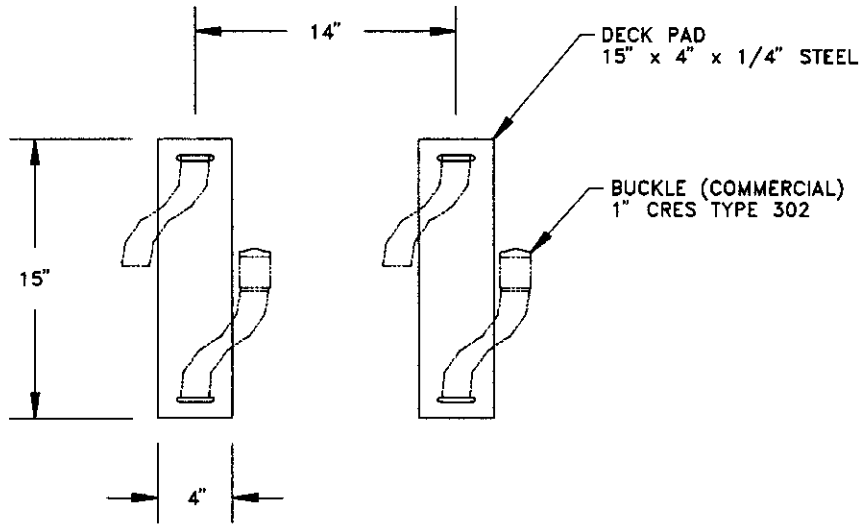

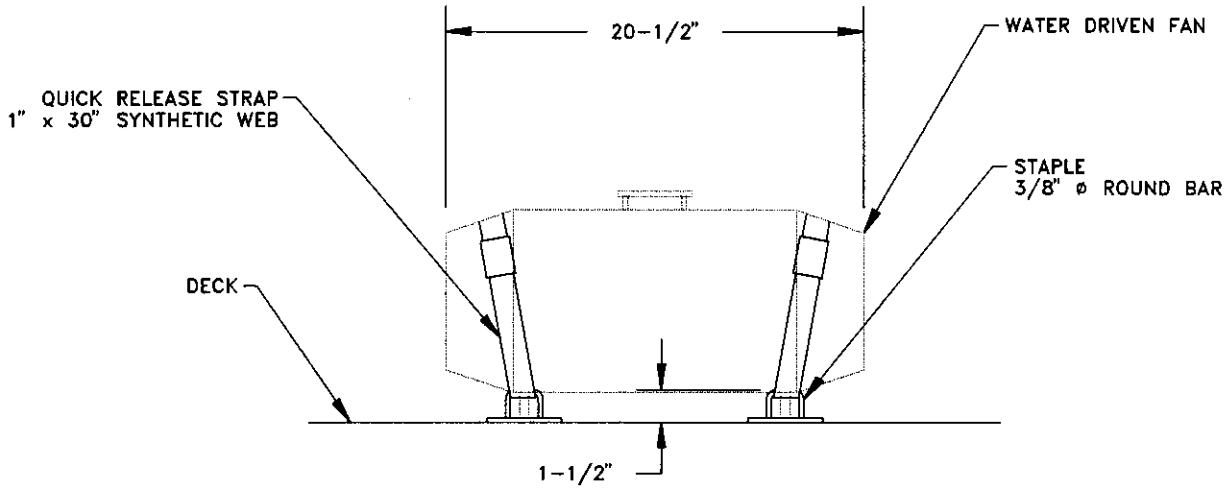

DAMAGE CONTROL EQUIPMENT STOWAGE SKETCH # 033

FAN STOWAGE, WATER DRIVEN
DECK MOUNTED

DCES033

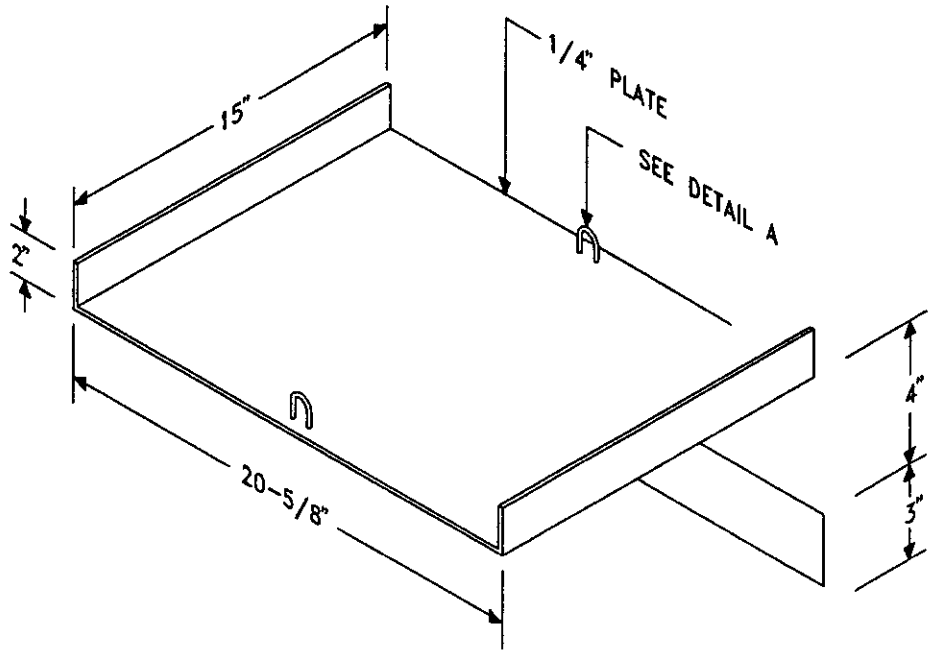

WATER DRIVEN FAN STOWAGE (BHD MOUNTED)

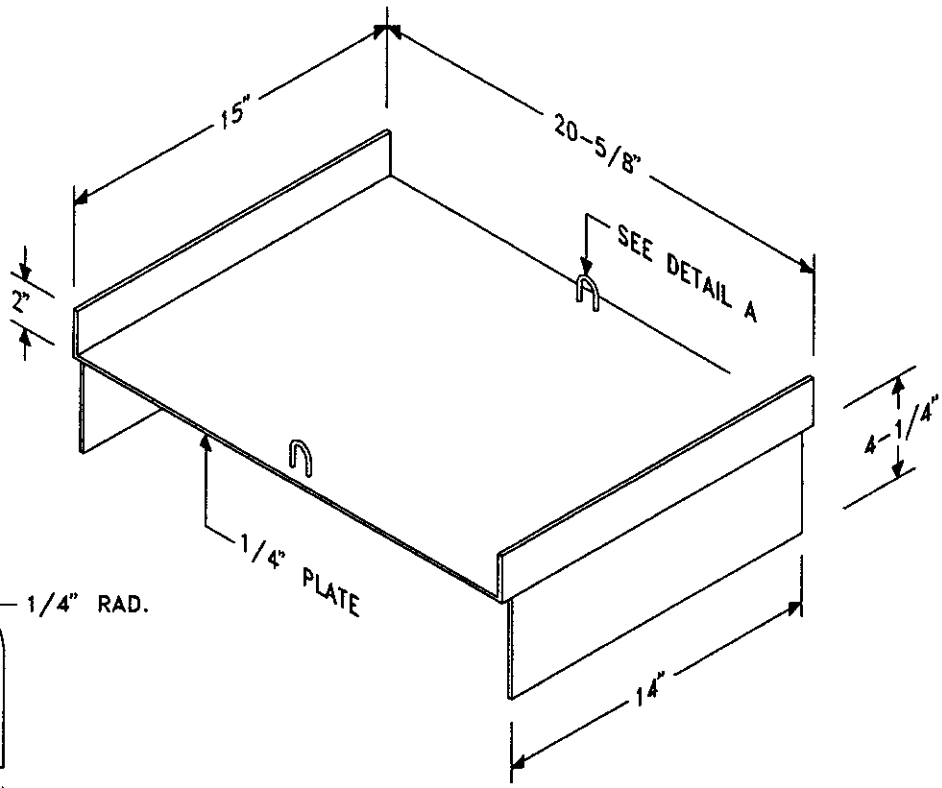

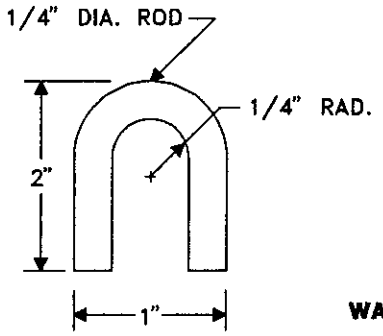

DETAIL A

WATER DRIVEN FAN STOWAGE (DECK MOUNTED)

DAMAGE CONTROL EQUIPMENT STOWAGE SKETCH # 034

FAN STOWAGE WATER DRIVEN BHD/DK MOUNTED (PLATE)

DCES034

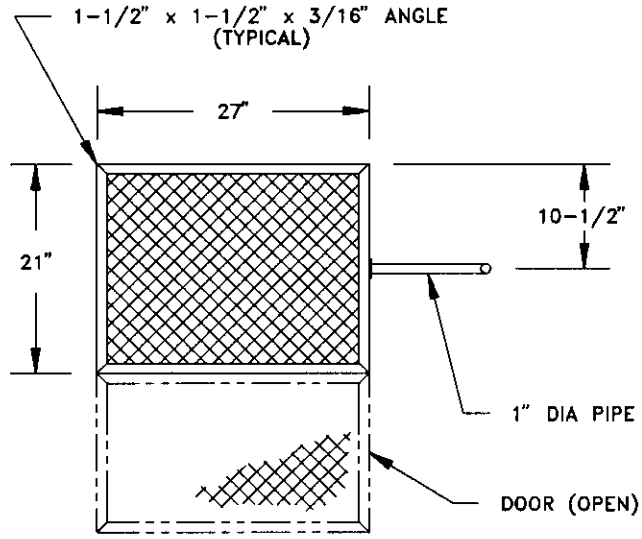

PLAN

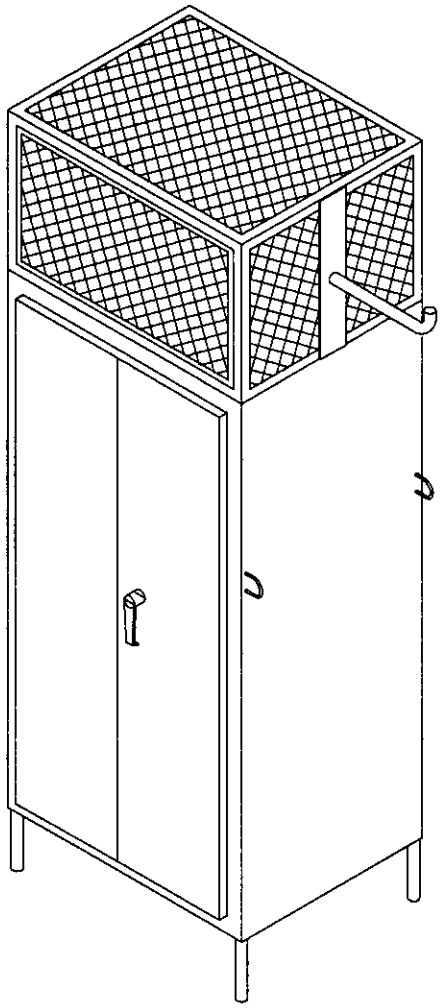

ISOMETRIC VIEW

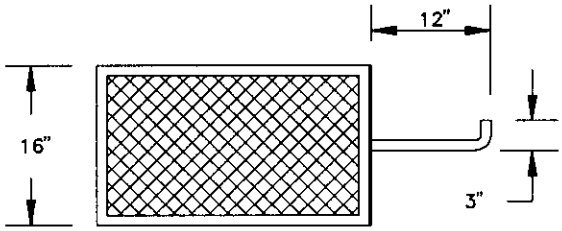

ELEVATION

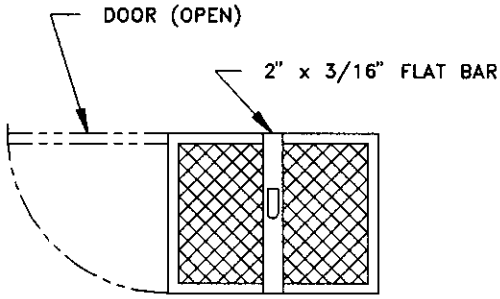

SIDE VIEW

DAMAGE CONTROL EQUIPMENT STOWAGE SKETCH # 035

FIREFIGHTERS' BOOT STOWAGE RACK (LOCKER MOUNTED) VERSION 1

DCES035

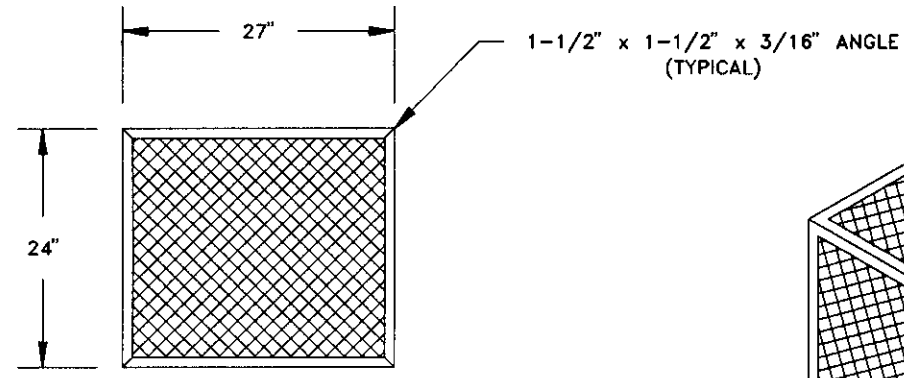

PLAN

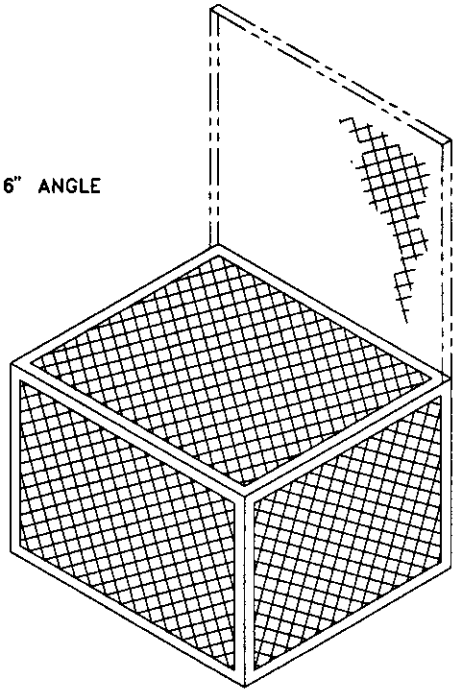

ISOMETRIC VIEW

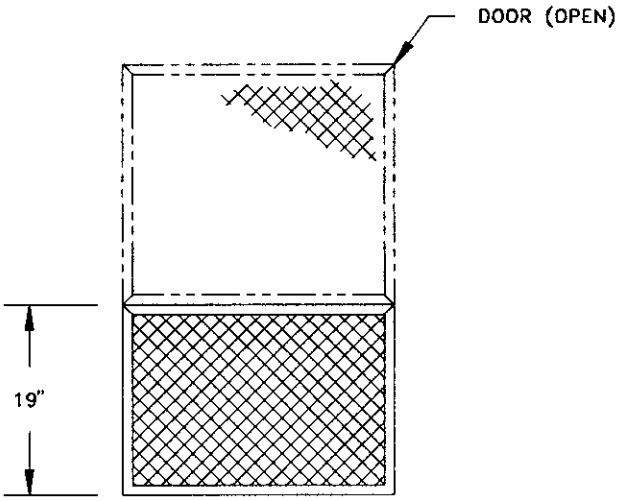

ELEVATION

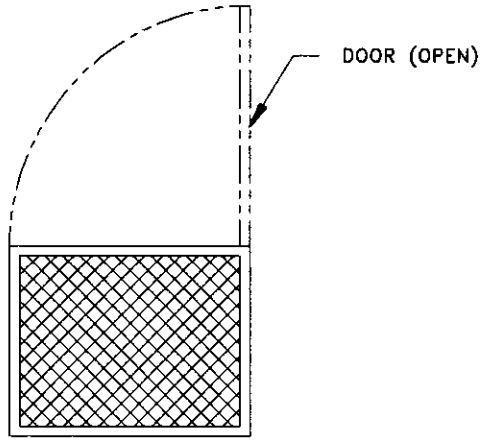

SIDE VIEW

DAMAGE CONTROL EQUIPMENT STOWAGE SKETCH # 036

FIREFIGHTERS' BOOT STOWAGE RACK (DECK MOUNTED)
VERSION 2

DCES036

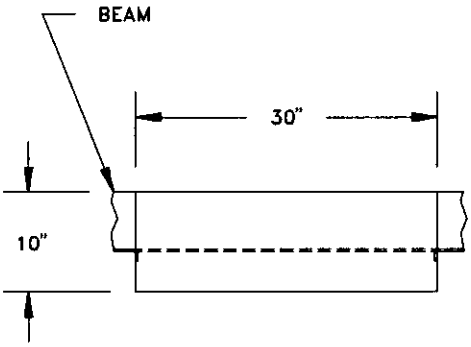

PLAN

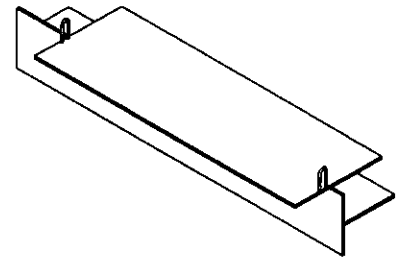

BUNGI CORD & BOOTS
NOT SHOWN FOR CLARITY.

ISOMETRIC VIEW

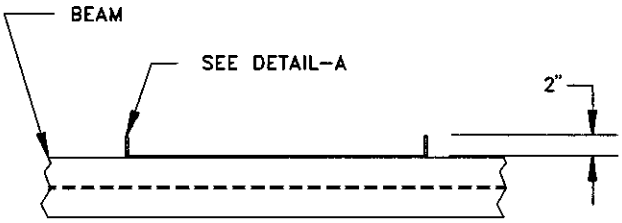

ELEVATION

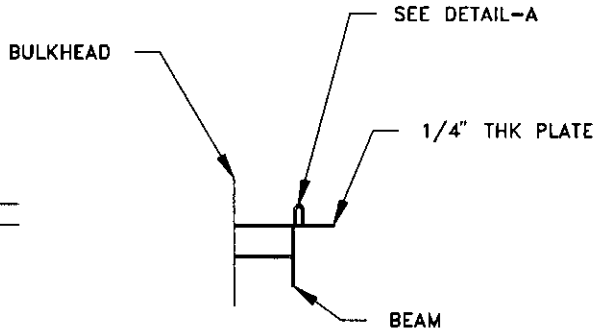

SIDE VIEW

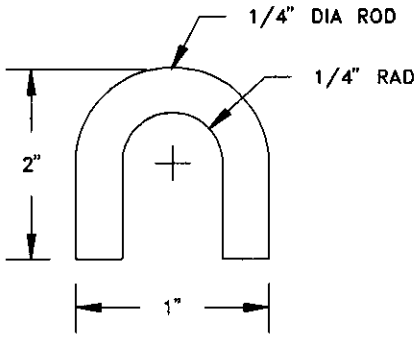

DETAIL A

NOTES:

1. WELD PLATE TO BEAM.
2. LENGTH/BOOT STOWAGE RATIO:
   10 INCHES = 1 PAIR
   20 INCHES = 2 PAIRS
   30 INCHES = 3 PAIRS
   40 INCHES = 4 PAIRS
   50 INCHES = 5 PAIRS
   60 INCHES = 6 PAIRS (MAX)

DAMAGE CONTROL EQUIPMENT STOWAGE SKETCH # 037

FIREFIGHTERS' BOOT STOWAGE RACK (BEAM MOUNTED) VERSION 3

DCES037

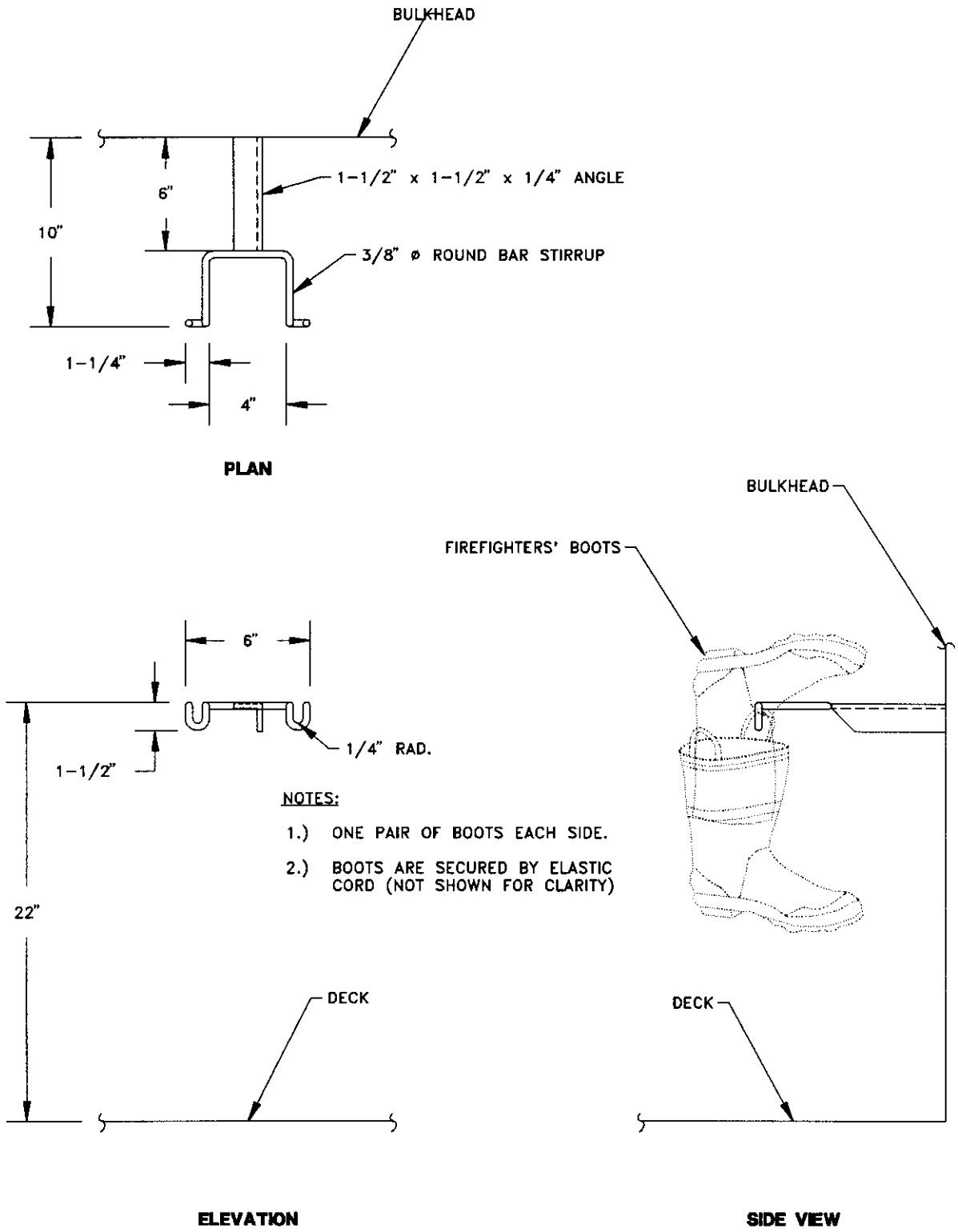

DAMAGE CONTROL EQUIPMENT STOWAGE SKETCH # 038

FIREFIGHTERS' BOOT STOWAGE (BHD MOUNTED) VERSION 4

DCES038

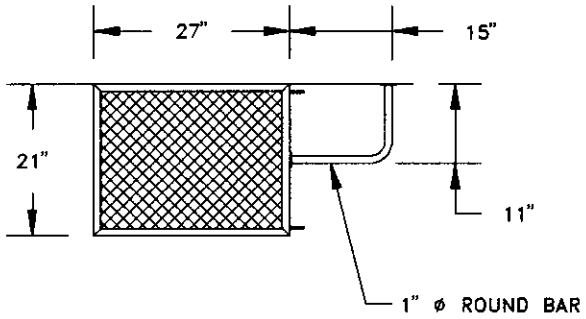

PLAN

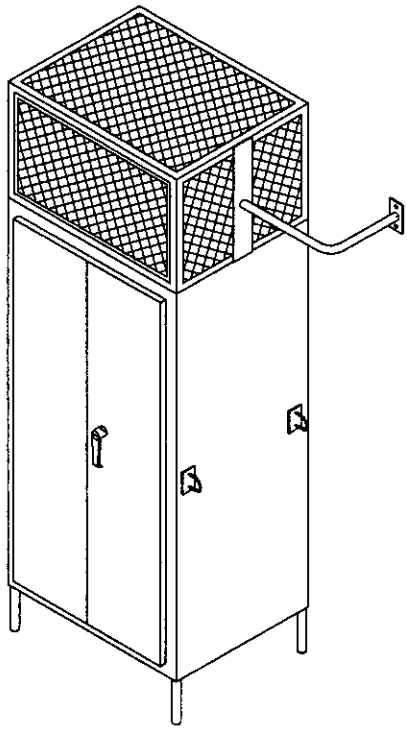

ISOMETRIC VIEW

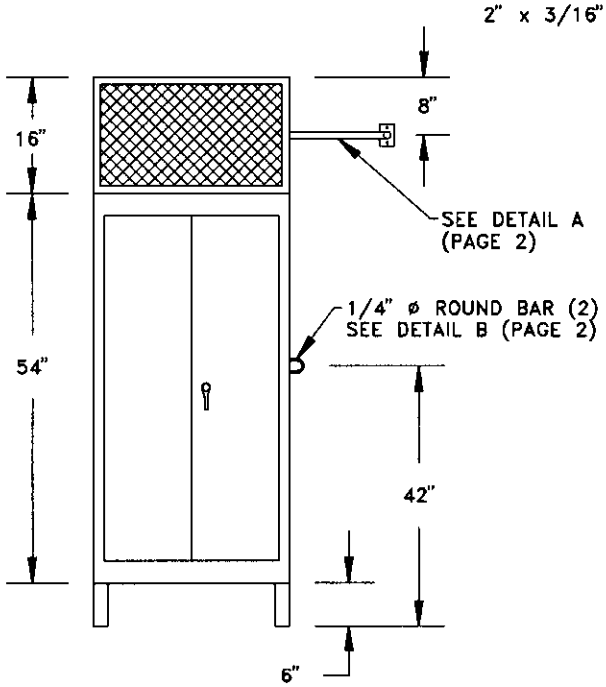

ELEVATION

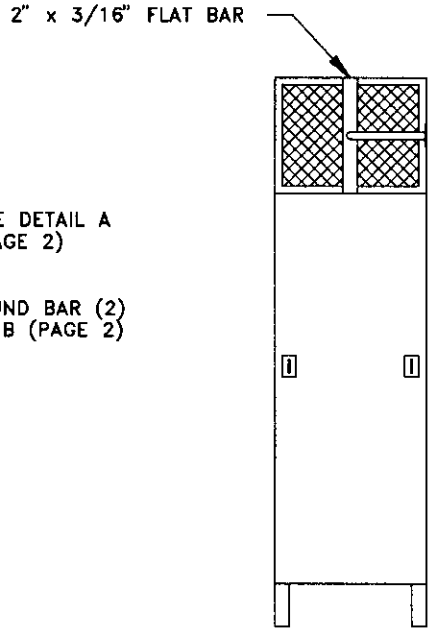

SIDE VIEW

DAMAGE CONTROL EQUIPMENT STOWAGE SKETCH # 039

FIREFIGHTERS' ENSEMBLE STOWAGE (HANGER BAR) VERSION 1 (PAGE 1 OF 2)

DCES039A

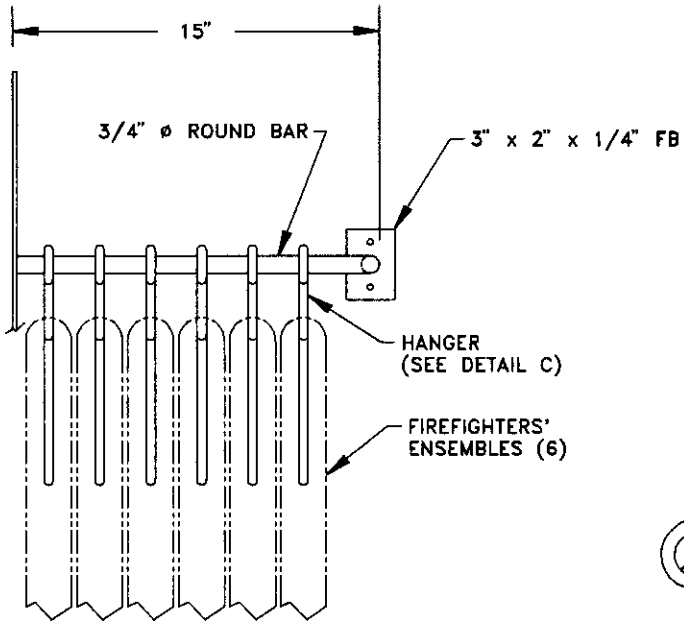

DETAIL A

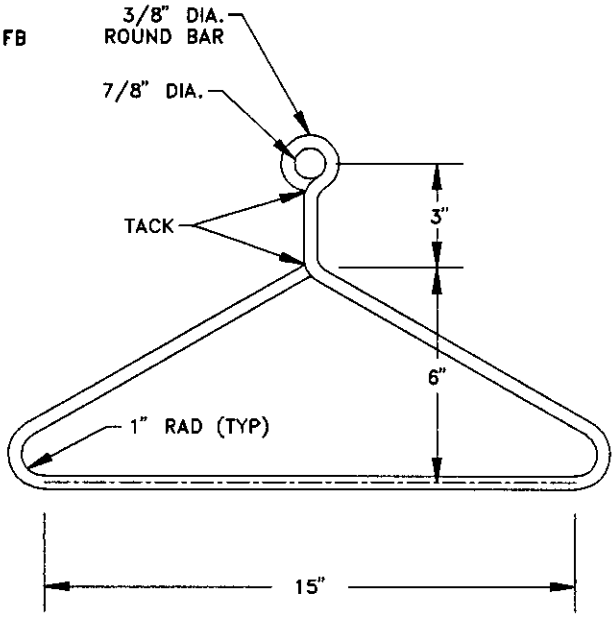

DETAIL C

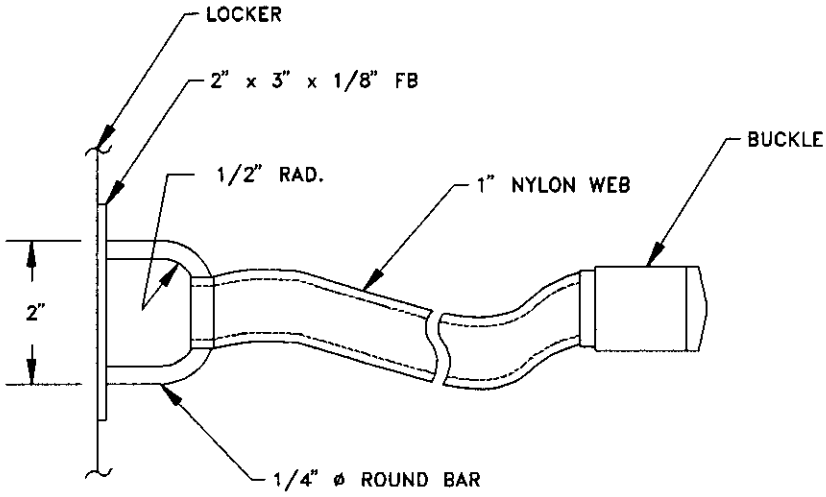

DETAIL B

DAMAGE CONTROL EQUIPMENT STOWAGE SKETCH # 039

FIREFIGHTERS' ENSEMBLE STOWAGE (HANGER BAR) VERSION 1 (PAGE 2 OF 2)

DCES039B

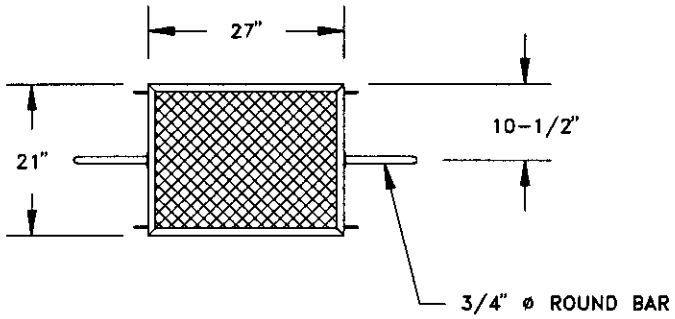

PLAN

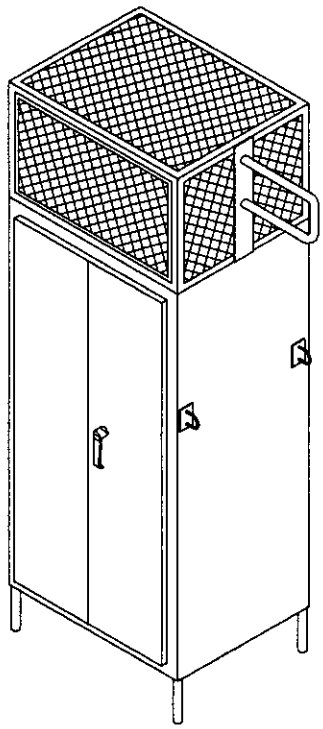

ISOMETRIC VIEW

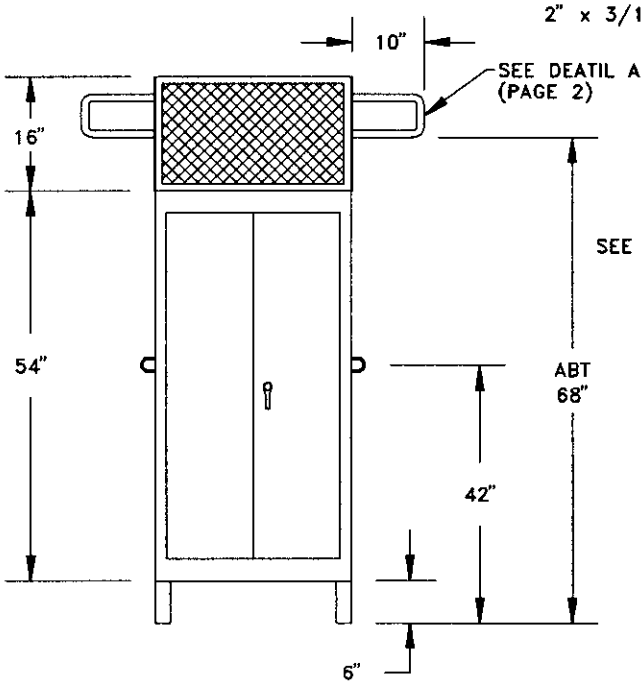

ELEVATION

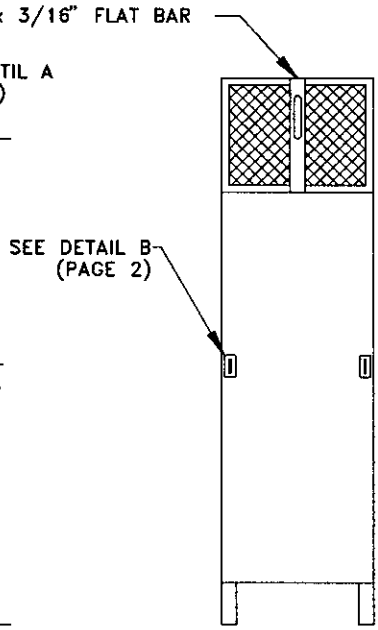

SIDE VIEW

DAMAGE CONTROL EQUIPMENT STOWAGE SKETCH # 040

FIREFIGHTERS' ENSEMBLE STOWAGE (HOOK)
VERSION 2 (PAGE 1 OF 2)

DCES040A

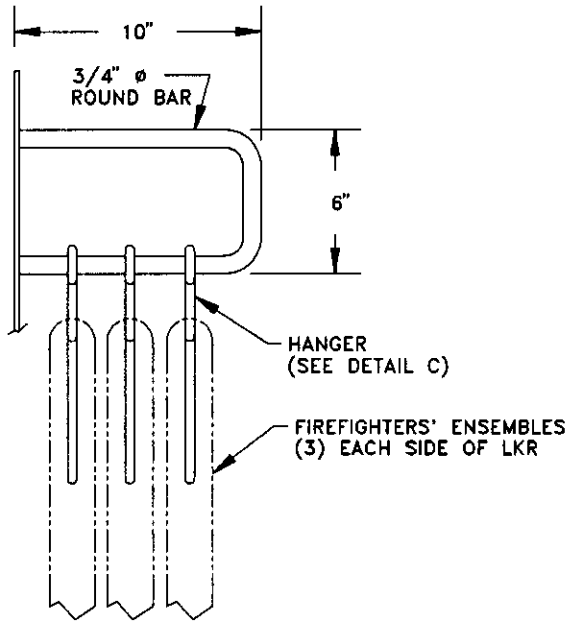

DETAIL A

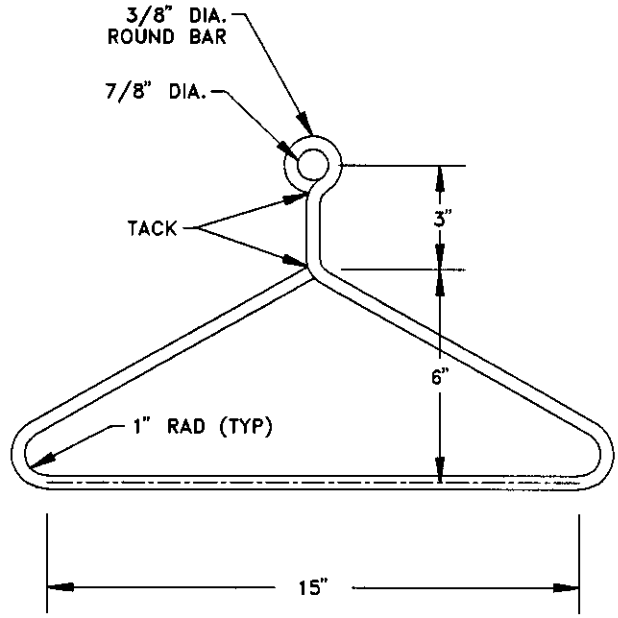

DETAIL C

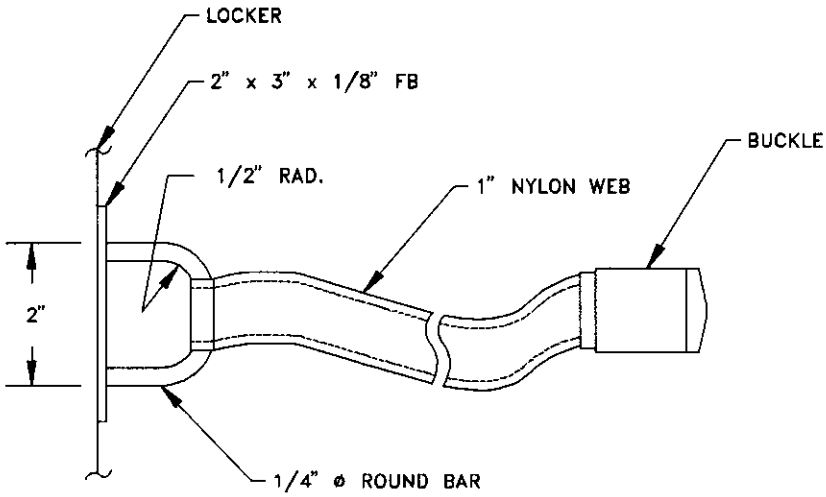

DETAIL B

DAMAGE CONTROL EQUIPMENT STOWAGE SKETCH # 040

FIREFIGHTERS' ENSEMBLE STOWAGE (HOOK)
VERSION 2 (PAGE 2 OF 2)

DCES040B

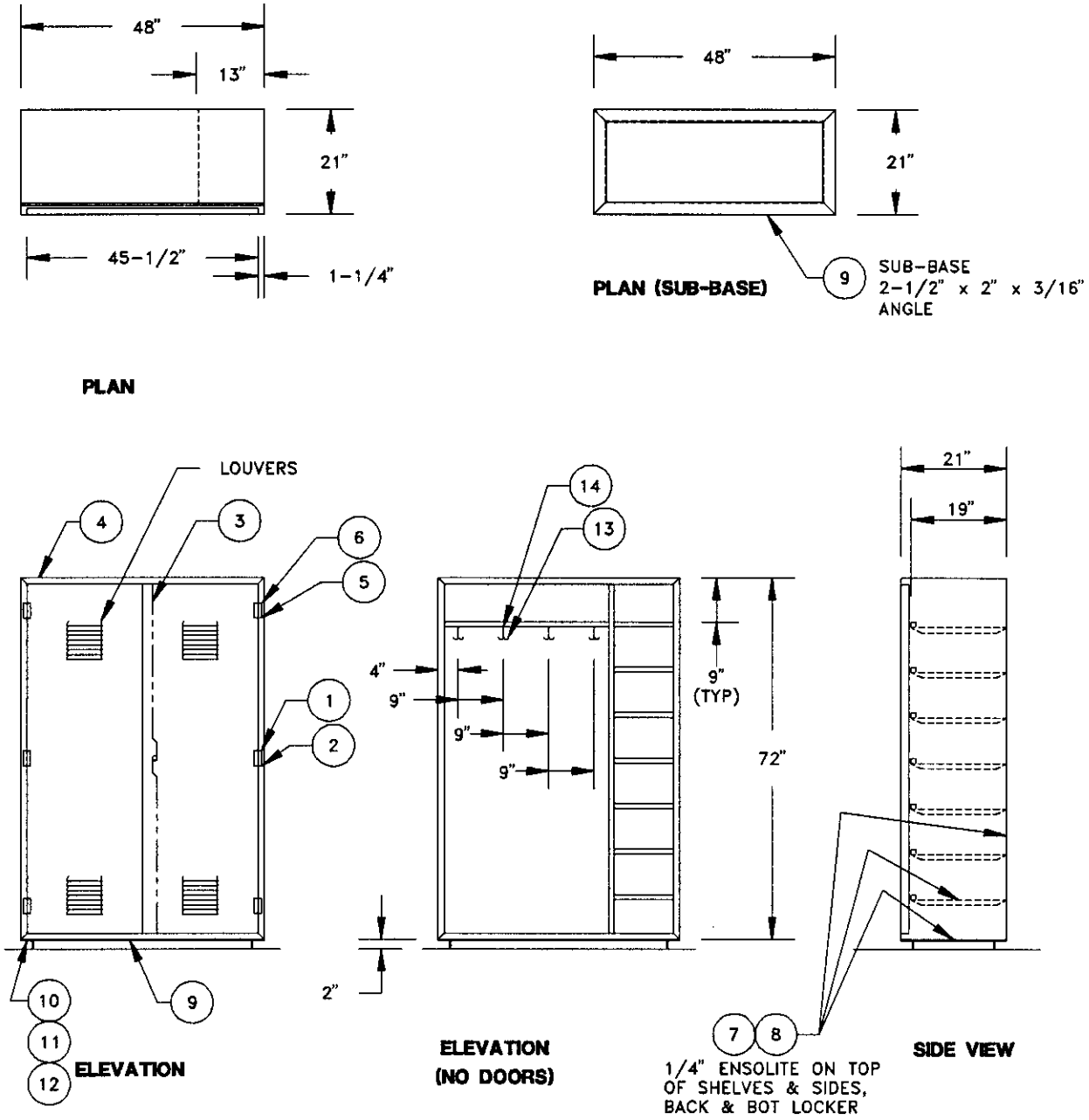

DAMAGE CONTROL EQUIPMENT STOWAGE SKETCH # 041

FIREFIGHTERS' ENSEMBLE COVERALL STOWAGE LOCKER VERSION 3 (PAGE 1 OF 2)

DCES041A

	ASSY	LIST OF MATERIAL			
QTY	PART NO.	NAME	MATERIAL	REFERENCES	REMARKS
6	1	HINGE, 2" x 1-5/8"	STL CAD PLTD	NN STOCK 17-15-302	
6	2	ANTI-RATTLER	RUBBER PURE GUM		
1	3	LOCKING DEVICE	SEE DET DWG	ASSY64, REF 6	
1	4	LOCKER	SEE DET DWG	REF 5	
36	5	HUCK RIVET SELF PLUGGING BLIND NO. P-6-D	ALUMINUM		
12	6	HUCK COMMERCIAL LOCK BOLT NO. CLPB F6-2	ALUMINUM		
AS REQ'D	7	1/4" ENSOLITE	TY III RUBBER		MIL-P-15280
AS REQ'D	8	BONDING AGENT	CEMENT		MIL-A-24179
12LF	9	ANGLE, BASE, 2-1/2" x 2" x 3/16"	MED STL		
24	10	BOLT, 1/4"-20UNC 2A	STL (ZINC COAT)		L-3/4"
24	11	NUT, HEX 1/4"-20UNC 2B	STL (ZINC COAT)		TACK WELD TO PT # 9 IN SHOP
24	12	WASHER, LOCK, 1/4"	STL (ZINC COAT)		
4	13	HOOK, COAT CEILING MOUNTED	COM'L STL	BLAINE WINDOW INC. PT # 6212	OR EQUAL
8	14	RIVET, AVEX 3/16" DIA.	COM'L AL		OR EQUAL

DAMAGE CONTROL EQUIPMENT STOWAGE SKETCH # 041

FIREFIGHTERS' ENSEMBLE COVERALL STOWAGE LOCKER VERSION 3 (PAGE 2 OF 2)

DCES041B

BUTTERFLY CLIP USED FOR STOWAGE OF FIRE FIGHTERS HELMET – MATERIAL TO BE CRES/CARBON STEEL 1/4 LB PLATE – DEBURR ALL EDGES.

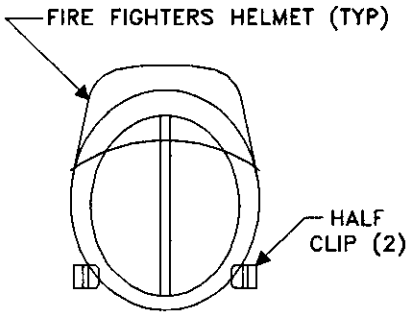

INSTALLATION MOUNTING SINGLE HELMET

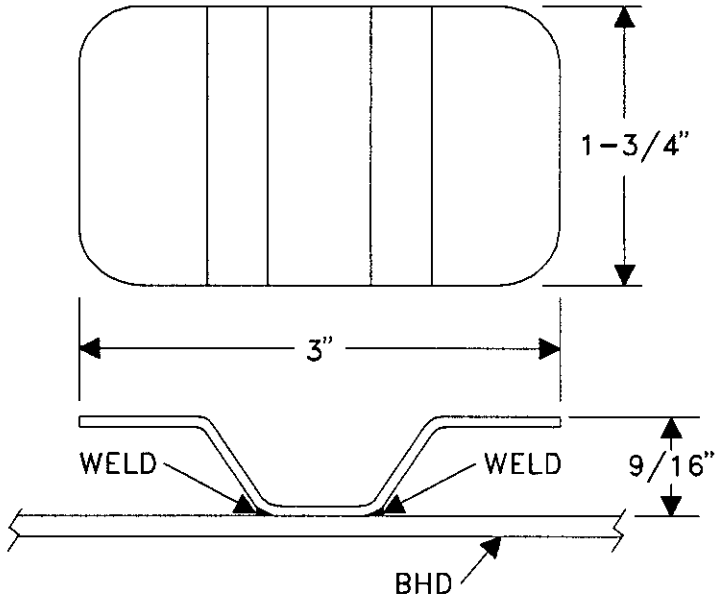

BUTTERFLY CLIP – FULL

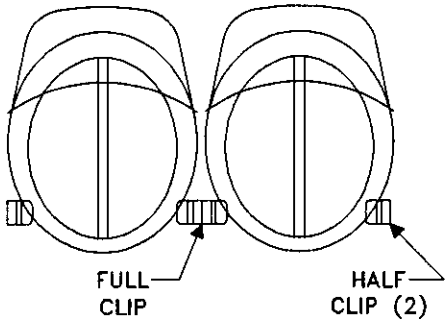

INSTALLTION MOUNTING HELMETS SIDE BY SIDE

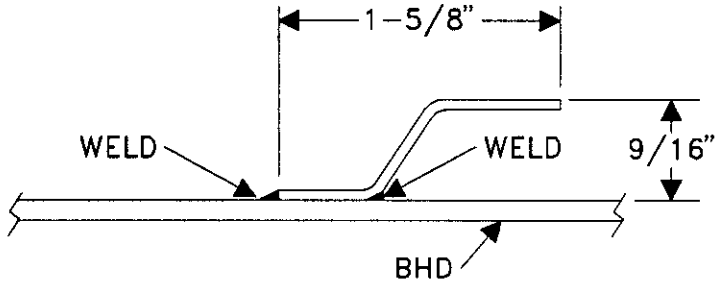

BUTTERFLY CLIP – HALF

NOTE:
1. CUT CLIP IN HALF FOR SINGLE HELMET MOUNTING, USE FULL CLIP WHEN MOUNTING HELMETS SIDE BY SIDE.
2. USE HELMET AS MODEL FOR DISTANCE WHEN INSTALLING CLIPS.

DAMAGE CONTROL EQUIPMENT STOWAGE SKETCH # 042

FIREFIGHTERS' HELMET STOWAGE (BUTTERFLY CLIP)

DCES042

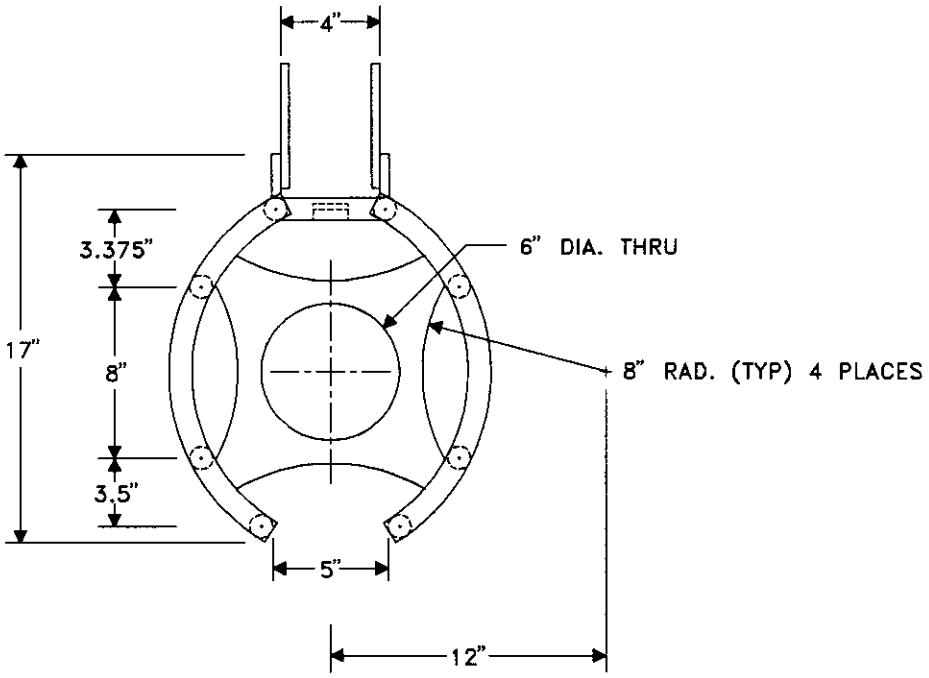

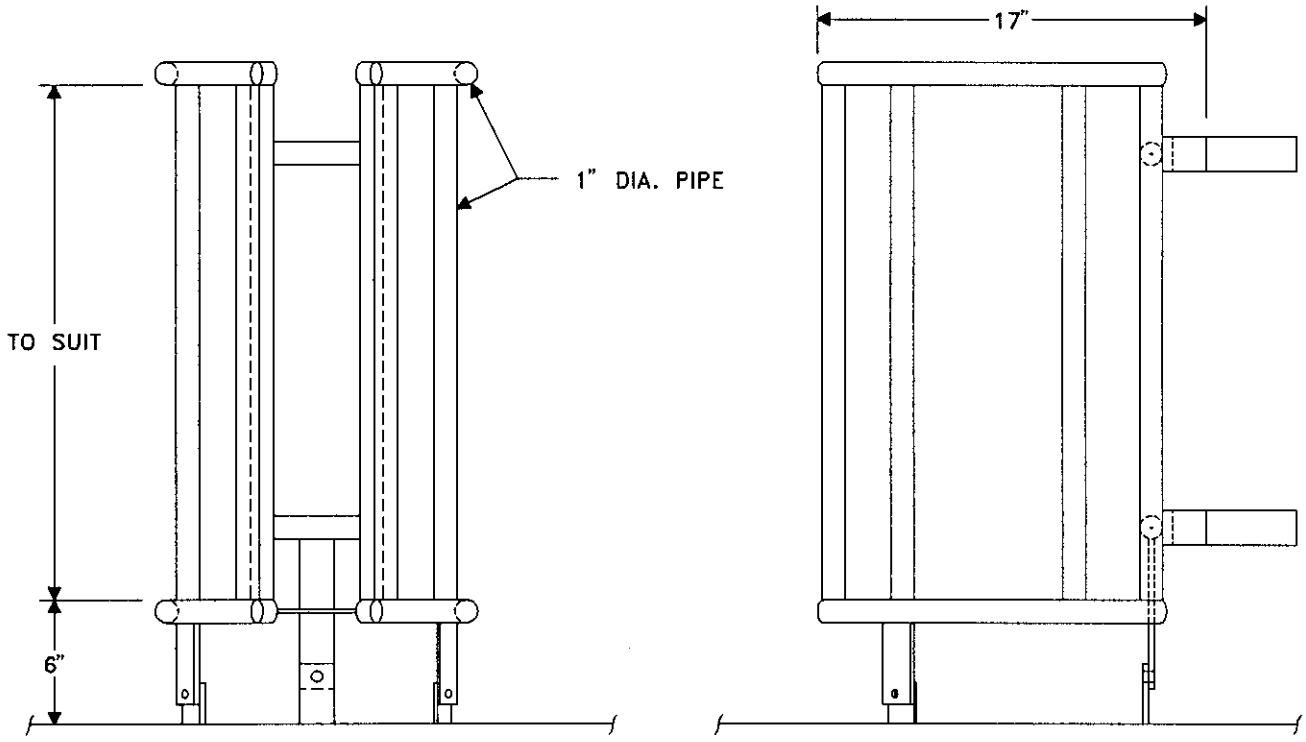

DAMAGE CONTROL EQUIPMENT STOWAGE SKETCH # 043

FIREFIGHTERS' HELMET STOWAGE RACK
VERSION 1

DCES043

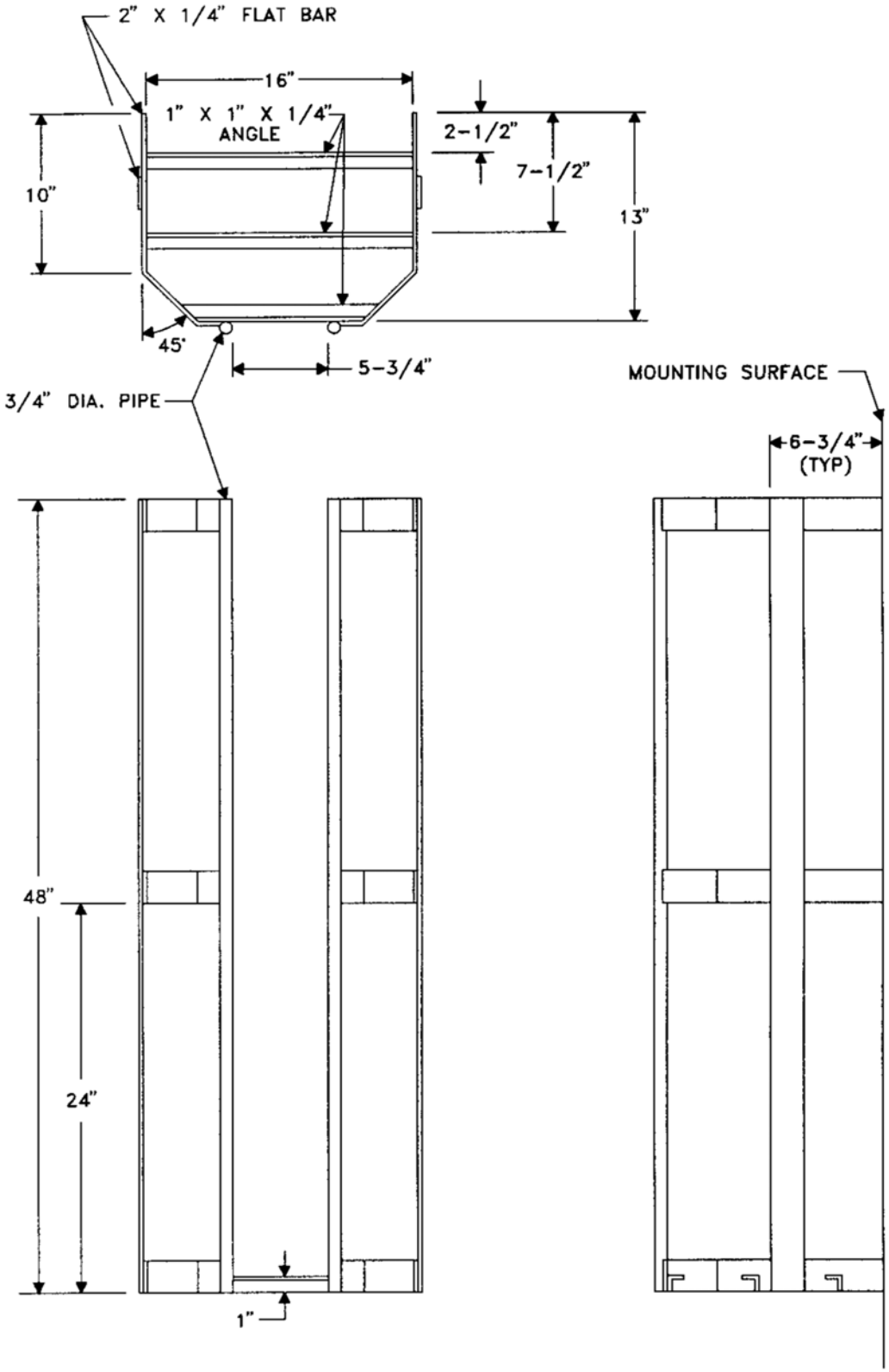

DAMAGE CONTROL EQUIPMENT STOWAGE SKETCH # 044

FIREFIGHTERS' HELMET STOWAGE RACK
VERSION 2 (LIGHT WEIGHT)

DCES044B

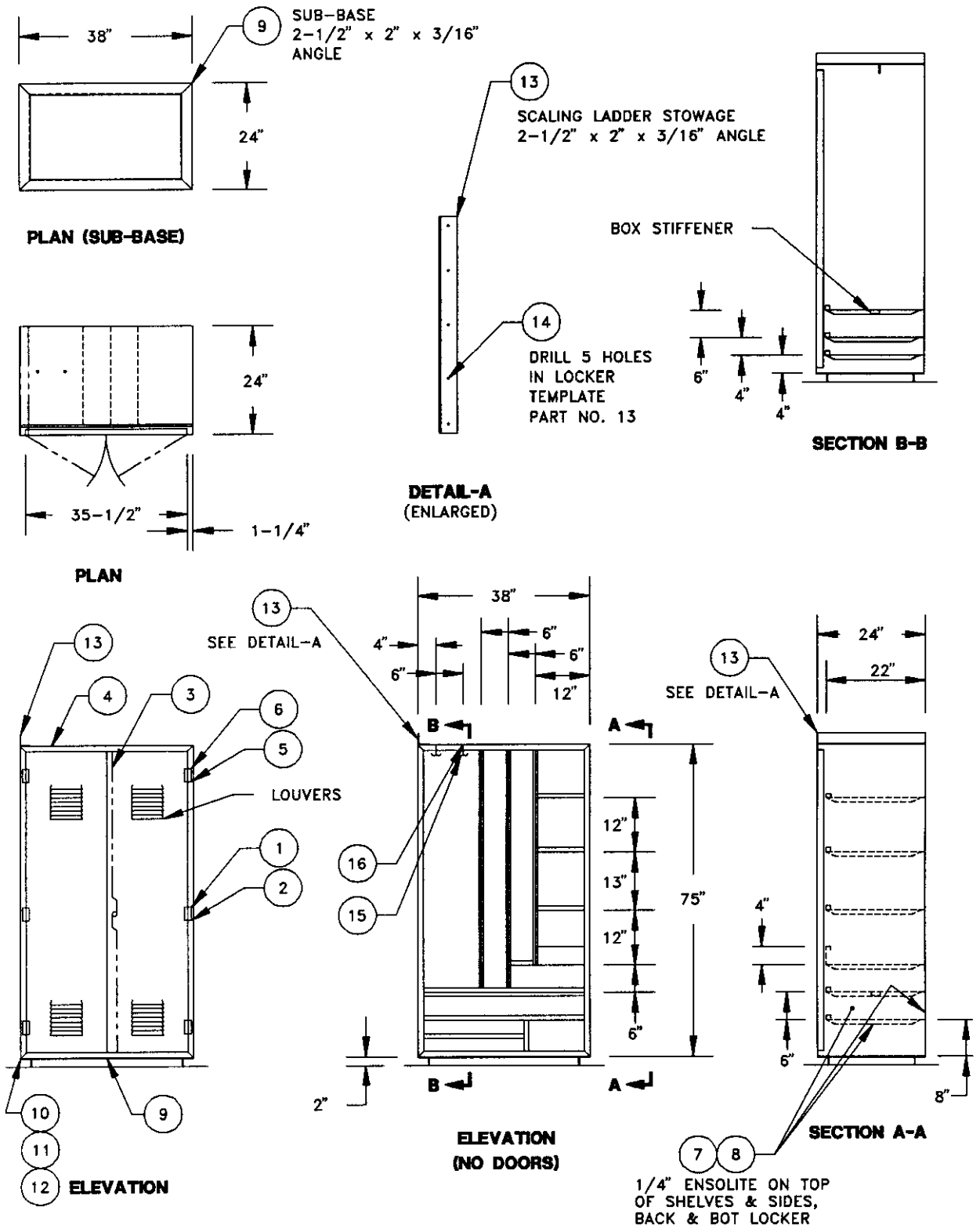

DAMAGE CONTROL EQUIPMENT STOWAGE SKETCH # 045

FIREFIGHTING EQUIPMENT & PROXIMITY SUIT STOWAGE LOCKER
PAGE 1 OF 3

DCES045A

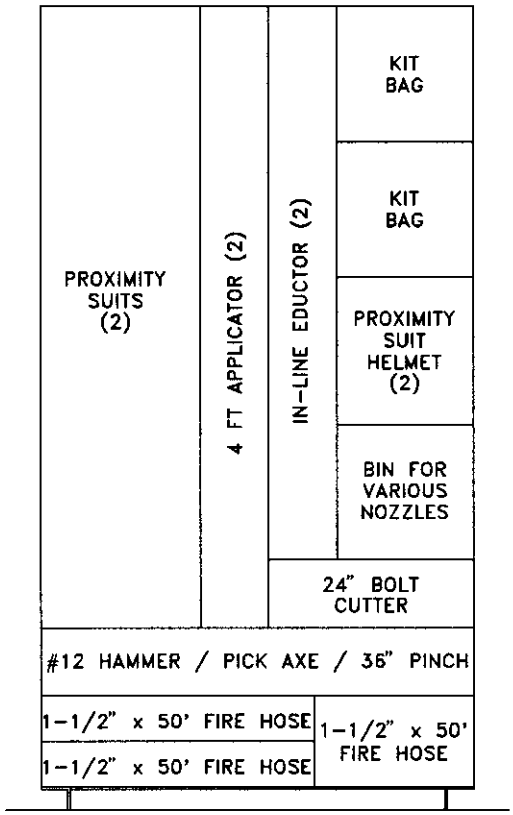

STOWAGE GUIDANCE PLAN

DAMAGE CONTROL EQUIPMENT STOWAGE SKETCH # 045

FIREFIGHTING EQUIPMENT & PROXIMITY SUIT STOWAGE LOCKER
PAGE 2 OF 3

DCES045B

	ASSY	LIST OF MATERIAL			
QTY	PART NO.	NAME	MATERIAL	REFERENCES	REMARKS
6	1	HINGE, 2" x 1-5/8"	STL CAD PLTD	NN STOCK 17-15-302	
6	2	ANTI-RATTLER	RUBBER PURE GUM		
1	3	LOCKING DEVICE	SEE DET DWG	ASSY64, REF 6	
1	4	LOCKER	SEE DET DWG	REF 5	
36	5	HUCK RIVET SELF PLUGGING BLIND NO. P-6-D	ALUMINUM		
12	6	HUCK COMMERCIAL LOCK BOLT NO. CLPB F6-2	ALUMINUM		
AS REQ'D	7	1/4" ENSOLITE	TY III RUBBER		MIL-P-15280
AS REQ'D	8	BONDING AGENT	CEMENT		MIL-A-24179
12LF	9	ANGLE, BASE, 2-1/2" x 2" x 3/16"	MED STL		
24	10	BOLT, 1/4"-20UNC 2A	STL (ZINC COAT)		L-3/4"
24	11	NUT, HEX 1/4"-20UNC 2B	STL (ZINC COAT)		TACK WELD TO PT # 9 IN SHOP
24	12	WASHER, LOCK	STL (ZINC COAT)		
1	13	SCALING LADDER	MED STL		
5	14	RIVET, AVEX 3/16" DIA.	COM'L AL		OR EQUAL
2	15	HOOK, COAT CEILING MOUNTED	COM'L STL	BLAINE WINDOW INC. PT # 6212	OR EQUAL
4	16	RIVET, AVEX 3/16" DIA.	COM'L AL		OR EQUAL

DAMAGE CONTROL EQUIPMENT STOWAGE SKETCH # 045

FIREFIGHTING EQUIPMENT & PROXIMITY SUIT STOWAGE LOCKER
PAGE 3 OF 3

DCES045C

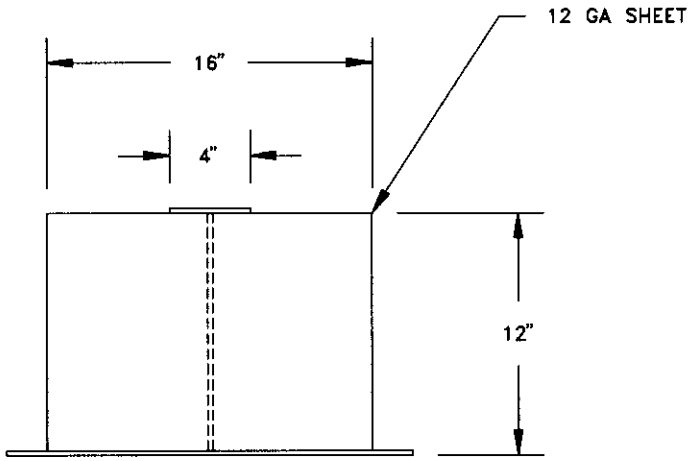

PLAN

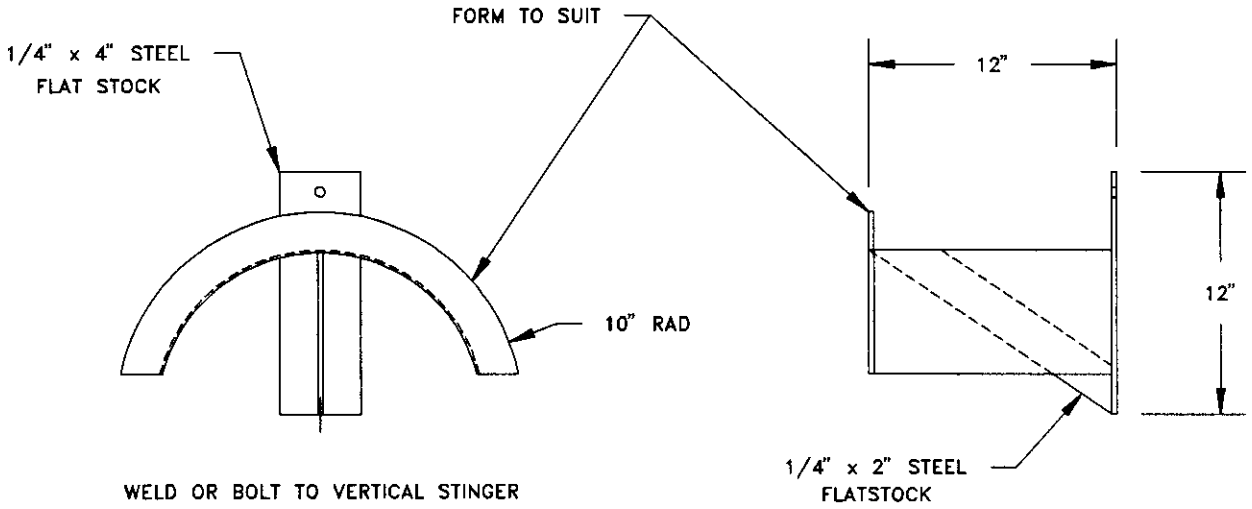

ELEVATION **SIDE VIEW**

DAMAGE CONTROL EQUIPMENT STOWAGE SKETCH # 046

FIRE HOSE HANGER STOWAGE RACK

DCE5046

GAS FREE ENGINEER'S LOCKER
ALUMINUM

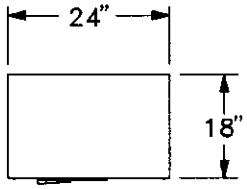

PLAN

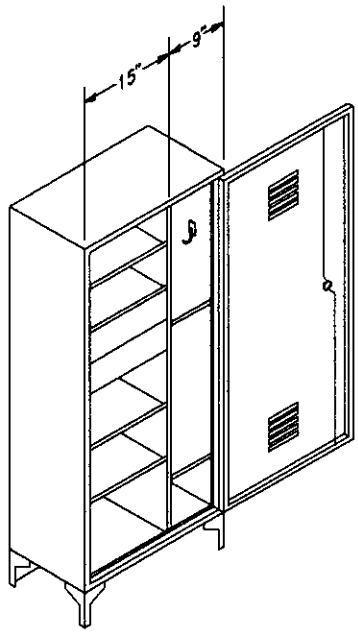

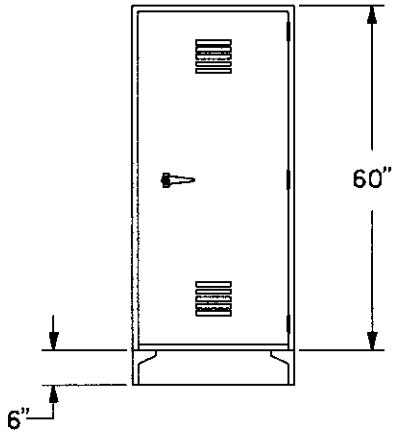

ELEVATION

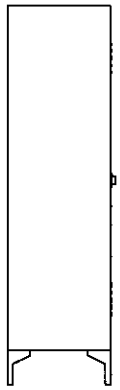

SIDE VIEW

NOTES:

1. MATERIAL:
   ALUMINUM – WHEN MADE IN ACCORDANCE WITH
   DWG # 53605-630718 MODIFIED.
2. FINISH AS SPECIFIED.
3. DOOR HAS LEVER HANDLE WITH PADLOCK EYE AND UP & DOWN BOLTS (PADLOCK NOT FURNISHED WITH LOCKER).
4. JAMESTOWN METAL SKETCH SK 226-1-N.
5. STENCIL 2", RED LETTERS:"GAS FREE ENGINEER".

DAMAGE CONTROL EQUIPMENT STOWAGE SKETCH # 047

GAS FREE ENGINEER STOWAGE
VERSION 1

DCES047

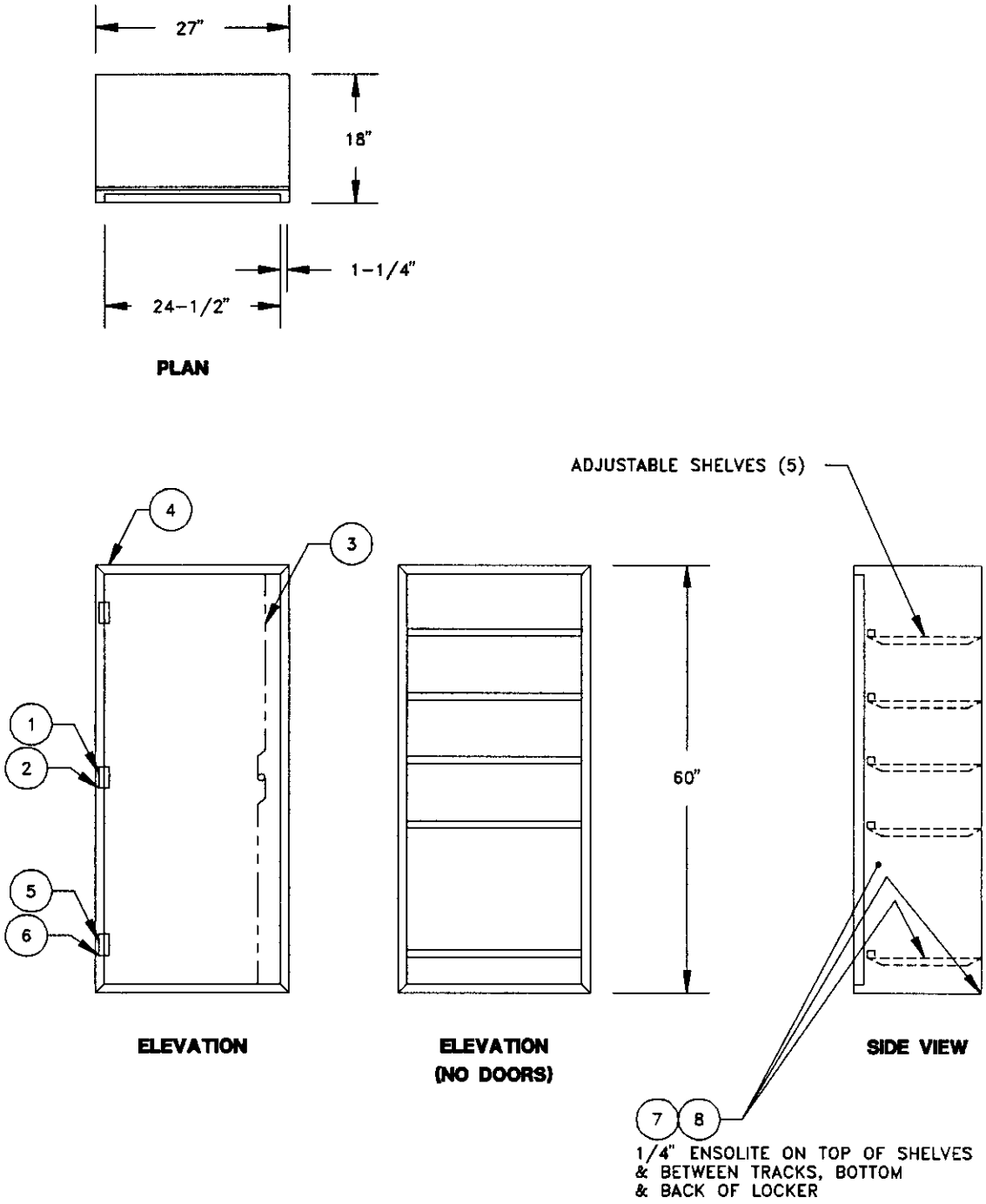

DAMAGE CONTROL EQUIPMENT STOWAGE SKETCH # 048

GAS FREE ENGINEER EQUIPMENT STOWAGE LOCKER VERSION 2 (PAGE 1 OF 2)

DCES048A

	ASSY	LIST OF MATERIAL			
QTY	PART NO.	NAME	MATERIAL	REFERENCES	REMARKS
6	1	HINGE, 2" x 1-5/8"	STL CAD PLTD	NN STOCK 17-15-302	
6	2	ANTI-RATTLER	RUBBER PURE GUM		
1	3	LOCKING DEVICE	SEE DET DWG	ASSY64, REF 6	
1	4	LOCKER	SEE DET DWG	REF 5	
36	5	HUCK RIVET SELF PLUGGING BLIND NO. P-6-D	ALUMINUM		
12	6	HUCK COMMERCIAL LOCK BOLT NO. CLPB F6-2	ALUMINUM		
AS REQ'D	7	1/4" ENSOLITE	TY III RUBBER		MIL-P-15280
AS REQ'D	8	BONDING AGENT	CEMENT		MIL-A-24179

DAMAGE CONTROL EQUIPMENT STOWAGE SKETCH # 048

GAS FREE ENGINEER EQUIPMENT STOWAGE LOCKER
VERSION 2 (PAGE 2 OF 2)

DCES048B

MCU 2P PROTECTIVE MASK/LIFE JACKET/ANTI-FLASH GEAR STACKED STOWAGE CABINET WITH OPTIONAL QUANTITY OF SHELVES DEPENDING ON REQUIREMENTS AND SPACE AVAILABLE.

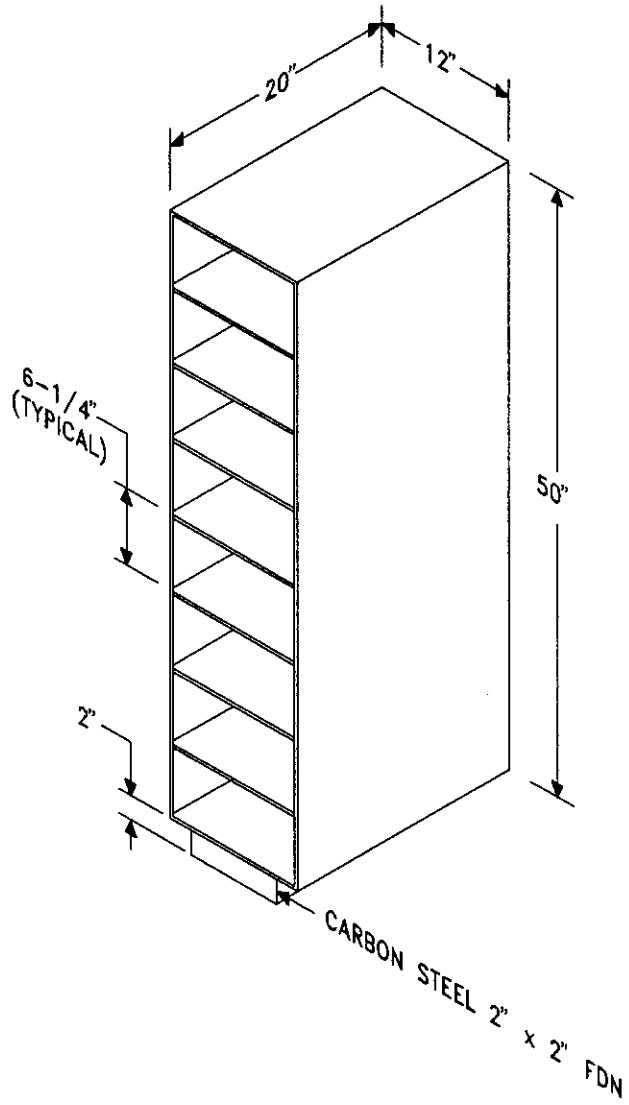

NOTE: INDIVIDUAL BOXES TO BE .0625" ALUMINUM. SPOT WELDED.

DAMAGE CONTROL EQUIPMENT STOWAGE SKETCH # 049

GENERAL QUARTERS EQUIPMENT STOWAGE VERSION 1

DCES049

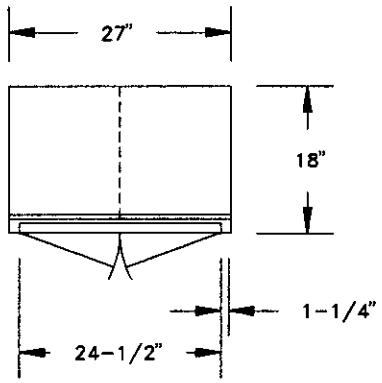

PLAN

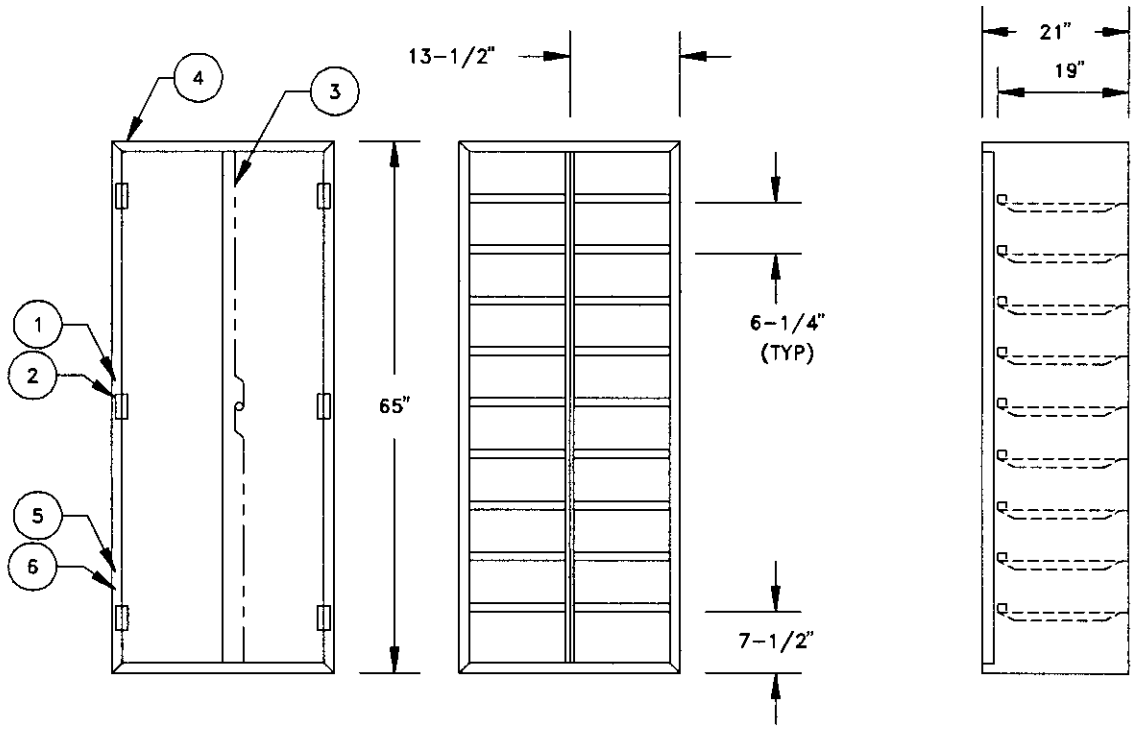

ELEVATION

ELEVATION
(NO DOORS)

SIDE VIEW

DAMAGE CONTROL EQUIPMENT STOWAGE SKETCH # 050

GENERAL QUARTERS EQUIPMENT STOWAGE LOCKER
VERSION 2 (PAGE 1 OF 2)

DCES050A

	ASSY	LIST OF MATERIAL			
QTY	PART NO.	NAME	MATERIAL	REFERENCES	REMARKS
6	1	HINGE, 2" x 1-5/8"	STL CAD PLTD	NN STOCK 17-15-302	
6	2	ANTI-RATTLER	RUBBER PURE GUM		
1	3	LOCKING DEVICE	SEE DET DWG	ASSY64, REF 6	
1	4	LOCKER	SEE DET DWG	REF 5	
36	5	HUCK RIVET SELF PLUGGING BLIND NO. P-6-D	ALUMINUM		
12	6	HUCK COMMERCIAL LOCK BOLT NO. CLPB F6-2	ALUMINUM		

DAMAGE CONTROL EQUIPMENT STOWAGE SKETCH # 050

GENERAL QUARTERS EQUIPMENT STOWAGE LOCKER
VERSION 2 (PAGE 2 OF 2)

DCES0506

MCU 2P PROTECTIVE MASK/LIFE JACKET/ANTI-FLASH GEAR STACKED STOWAGE CABINET WITH OPTIONAL QUANTITY OF SHELVES DEPENDING ON REQUIREMENTS AND SPACE AVAILABLE.

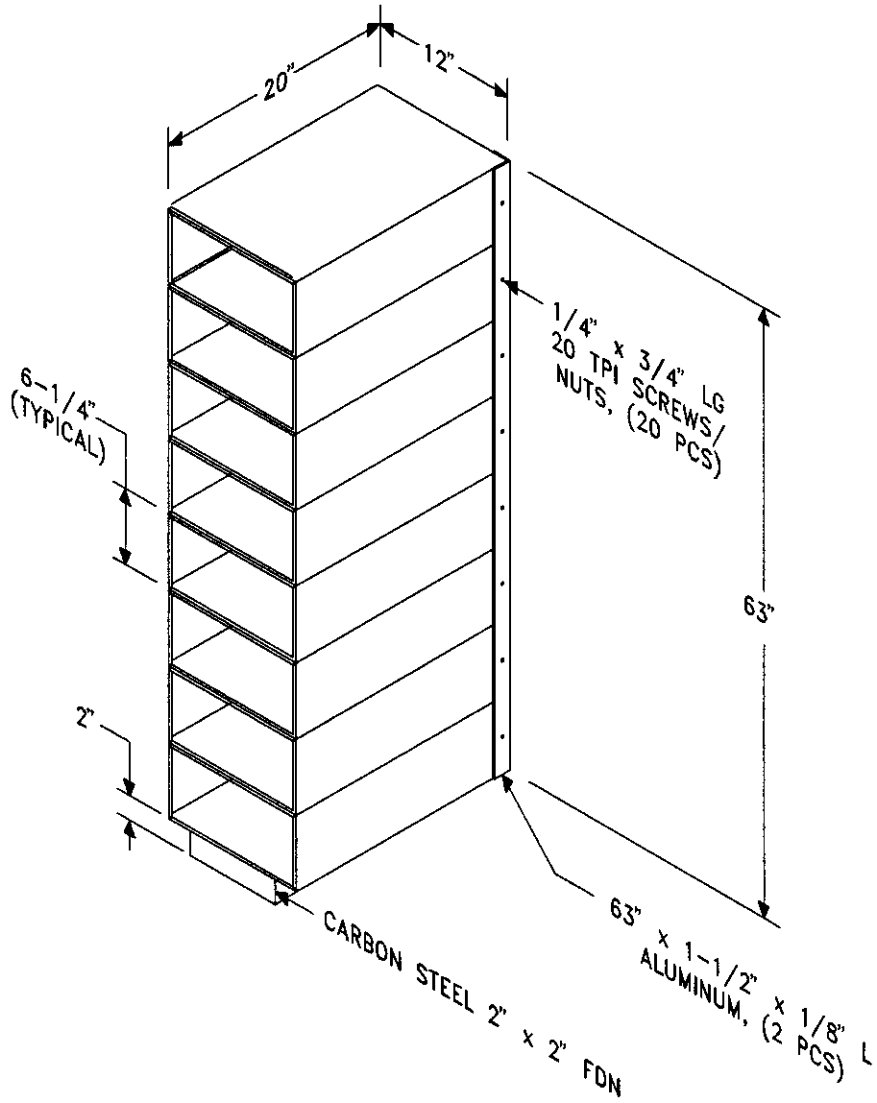

NOTE: INDIVIDUAL BOXES TO BE .0625" ALUMINUM. SPOT WELDED.

DAMAGE CONTROL EQUIPMENT STOWAGE SKETCH # 051

GENERAL QUARTERS EQUIPMENT STOWAGE VERSION 3

DCES051

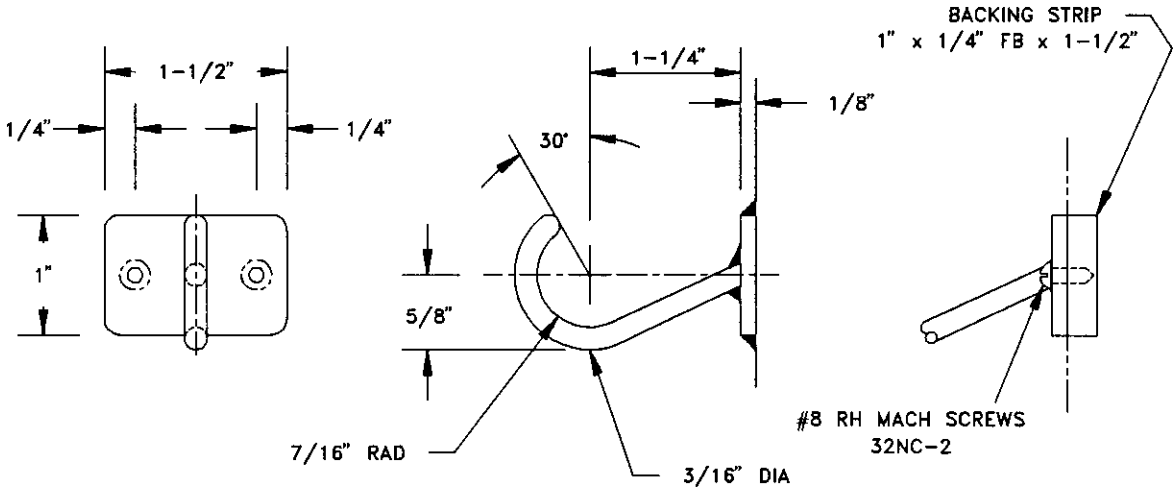

BAG HOOK

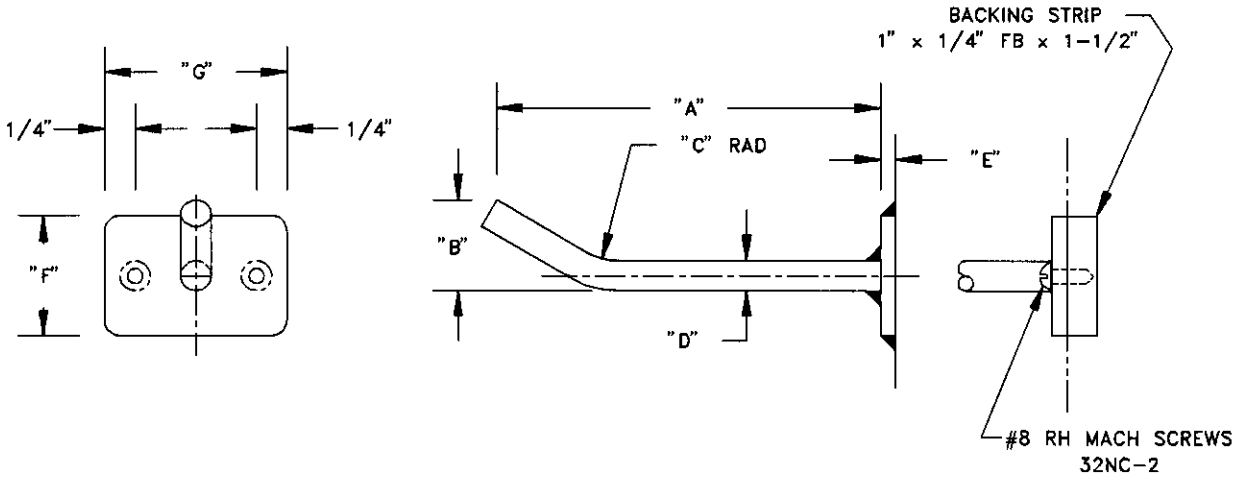

BOLT CUTTER HOOK

DAMAGE CONTROL EQUIPMENT STOWAGE SKETCH # 052

HOOKS, MISCELLANEOUS DAMAGE CONTROL STOWAGE

PAGE 1 OF 3

DCE5052A

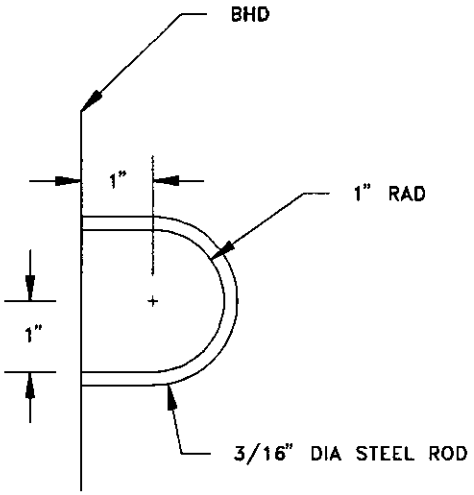

"M" STAPLE

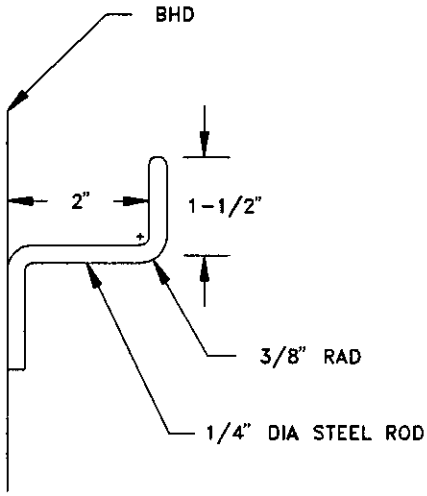

HOOK

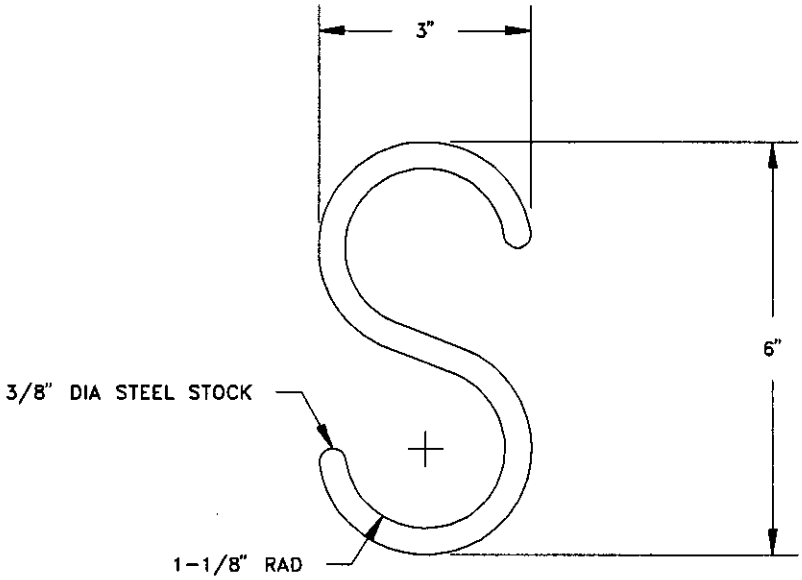

"S" HOOK

DAMAGE CONTROL EQUIPMENT STOWAGE SKETCH # 052

HOOKS, MISCELLANEOUS DAMAGE CONTROL STOWAGE

PAGE 2 OF 3

DCE5052B

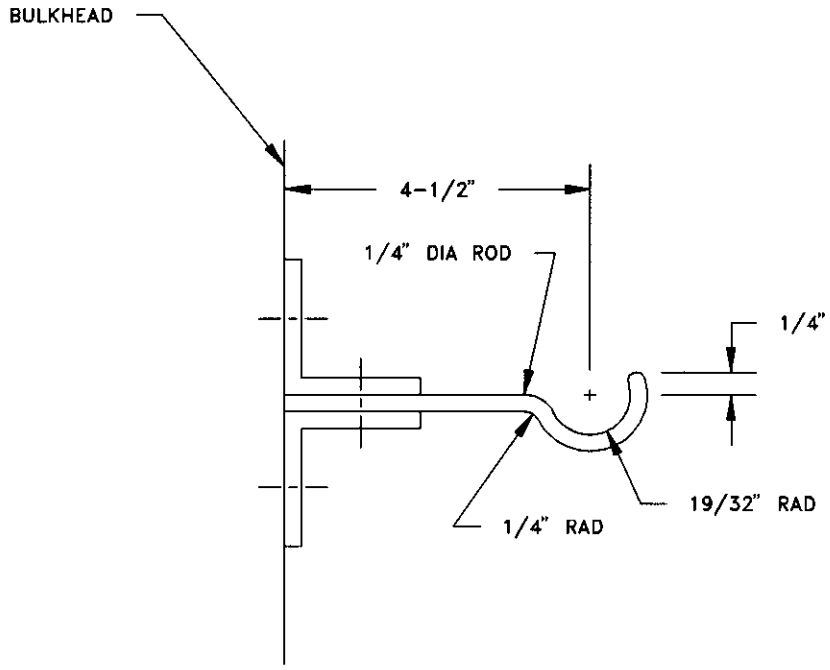

"Y" SUPPORT

DAMAGE CONTROL EQUIPMENT STOWAGE SKETCH # 052

HOOKS, MISCELLANEOUS DAMAGE CONTROL STOWAGE

PAGE 3 OF 3

DCES052C

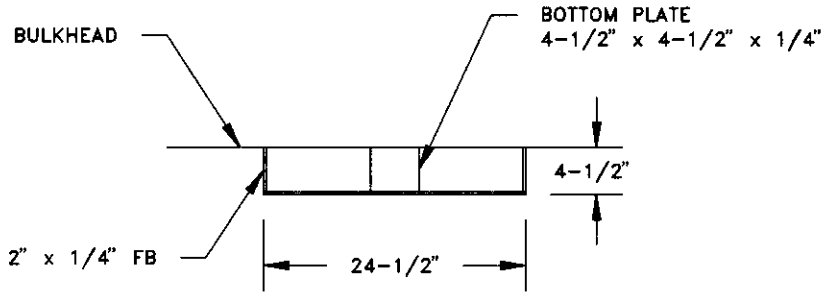

PLAN

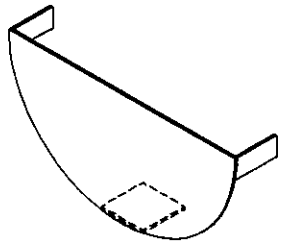

ISOMETRIC VIEW

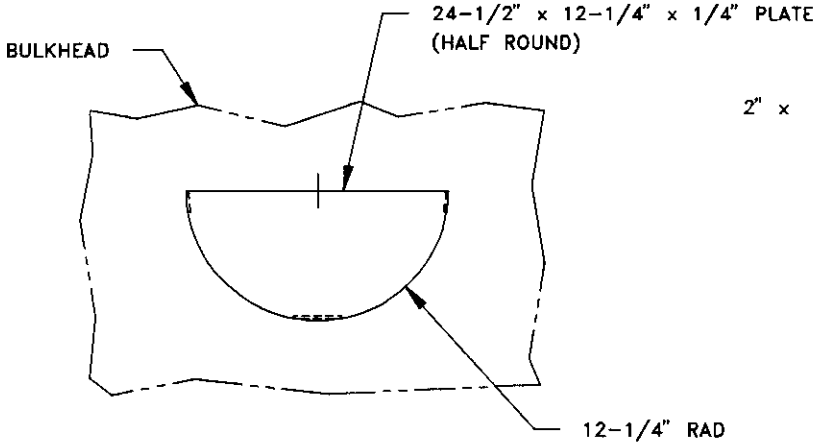

ELEVATION

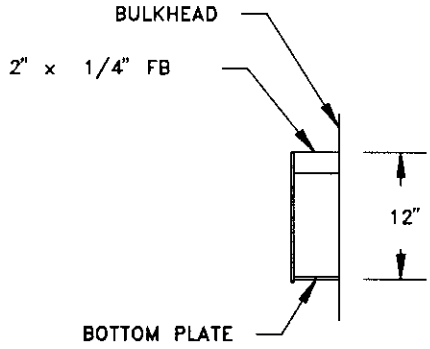

SIDE VIEW

1-1/2" x 50' FIRE HOSE CRADLE

DAMAGE CONTROL EQUIPMENT STOWAGE SKETCH # 053

HOSE STOWAGE (CRADLE)
VERSION 1 (PAGE 1 OF 3)

DCES053A

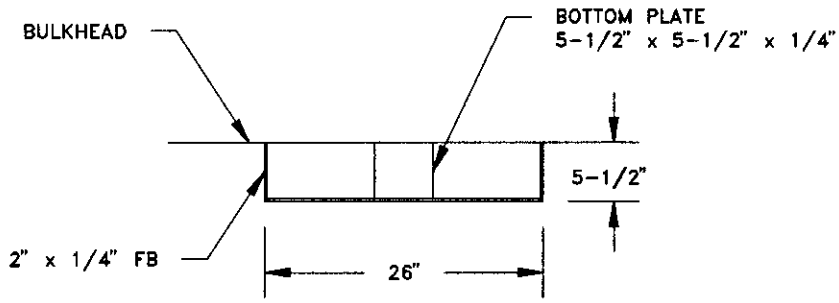

PLAN

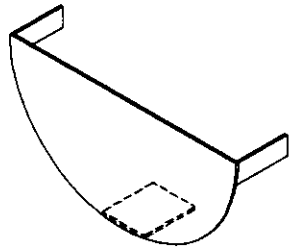

ISOMETRIC VIEW

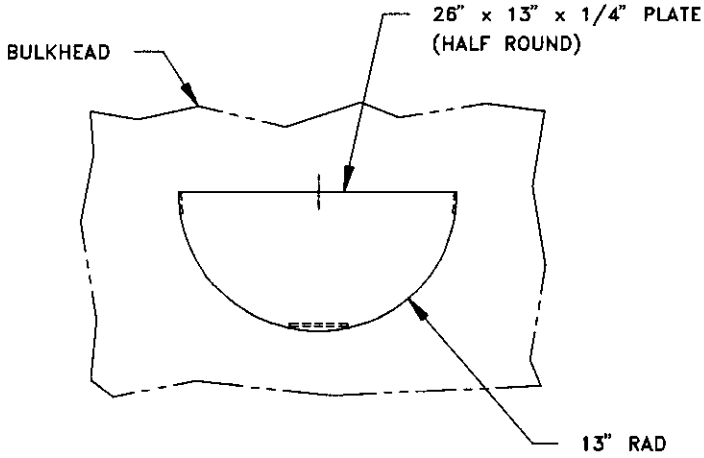

ELEVATION

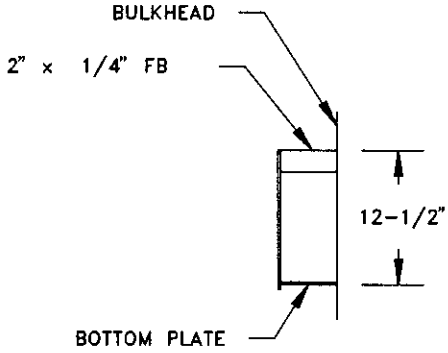

SIDE VIEW

2-1/2" x 50' FIRE HOSE CRADLE

DAMAGE CONTROL EQUIPMENT STOWAGE SKETCH # 053

HOSE STOWAGE (CRADLE)
VERSION 1 (PAGE 2 OF 3)

DCE50538

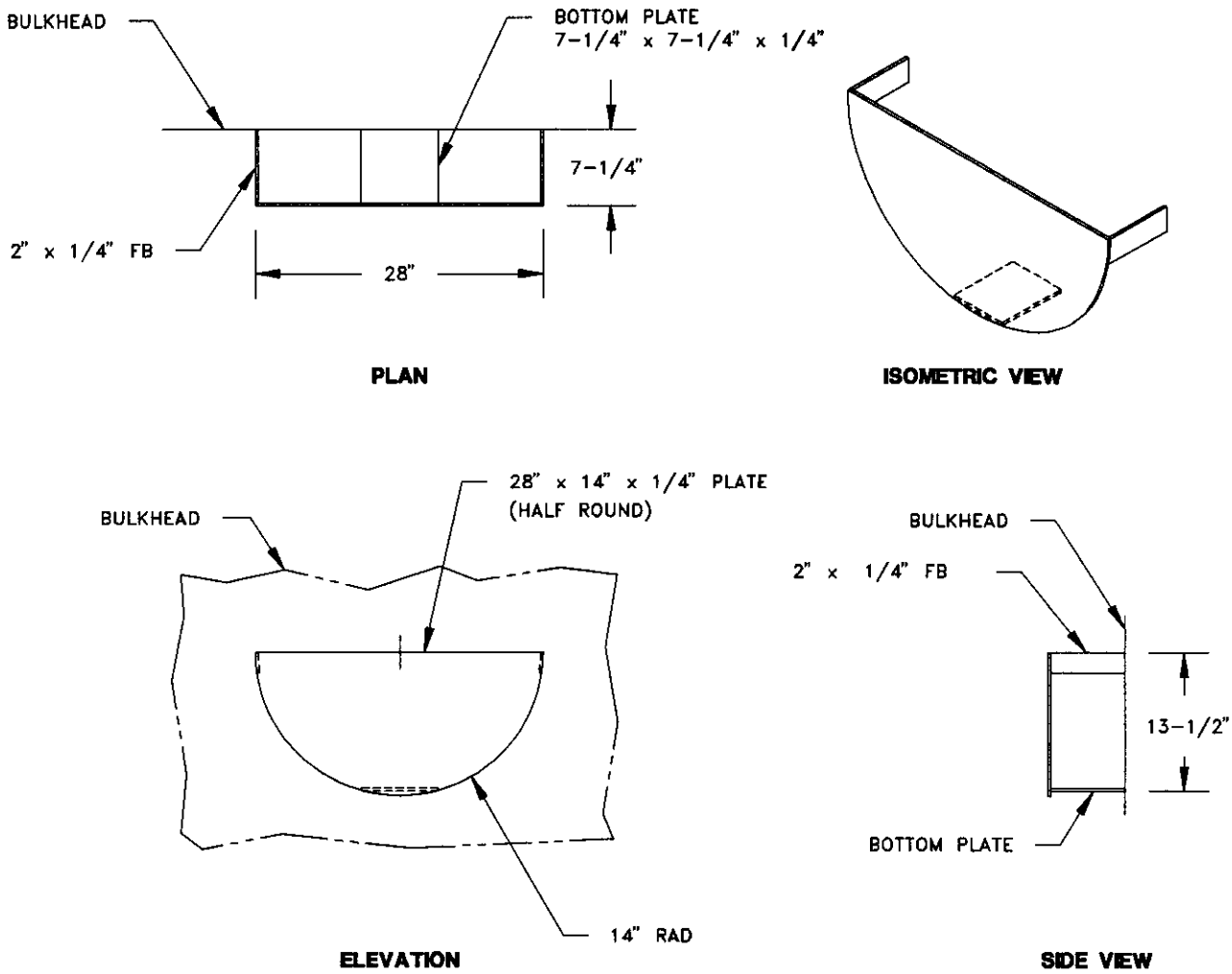

4" x 50' DISCHARGE HOSE CRADLE

DAMAGE CONTROL EQUIPMENT STOWAGE SKETCH # 053

HOSE STOWAGE (CRADLE)
VERSION 1 (PAGE 3 OF 3)

DCES053C

NOM ø (HOSE)	"A" DIMENSION
1-1/2"	4" x 1/4" x 2-3/4" STEEL FB (AS REQUIRED)
2-1/2"	4" x 1/4" x 4-1/2" STEEL FB (AS REQUIRED)
4"	4" x 1/4" x 6-5/8" STEEL FB (AS REQUIRED)

(A) PAD, TAPPED, ROUND, 3/8"-16 UNC-2 BX, 1" LONG STEEL (AS REQUIRED)

(B) BOLT, HEX HEAD, SELF LOCKING, 3/8"-16 UNC-2 A, 1" LONG, STEEL (AS REQUIRED)

(C) BOLT, HEX HEAD, 3/8"-16 UNC-2 A, 1" LONG, STEEL (AS REQUIRED)

(D) NUT, HEX, SELF LOCKING, 3/8"-UNCJ-3 B, STEEL (AS REQUIRED)

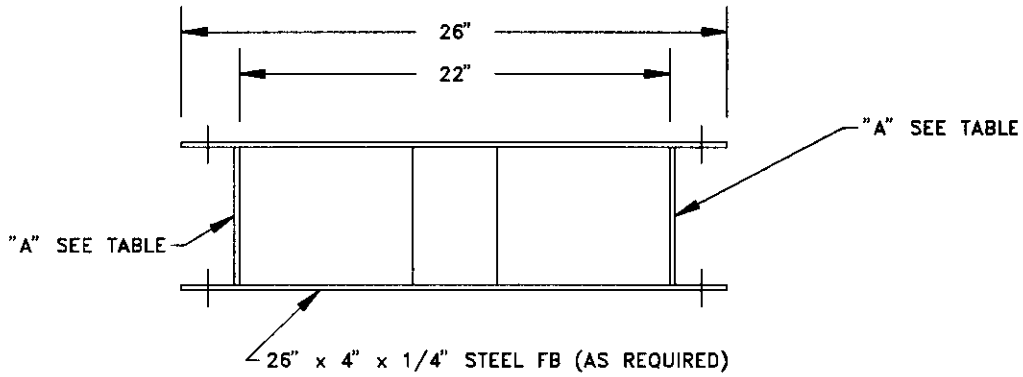

PLAN

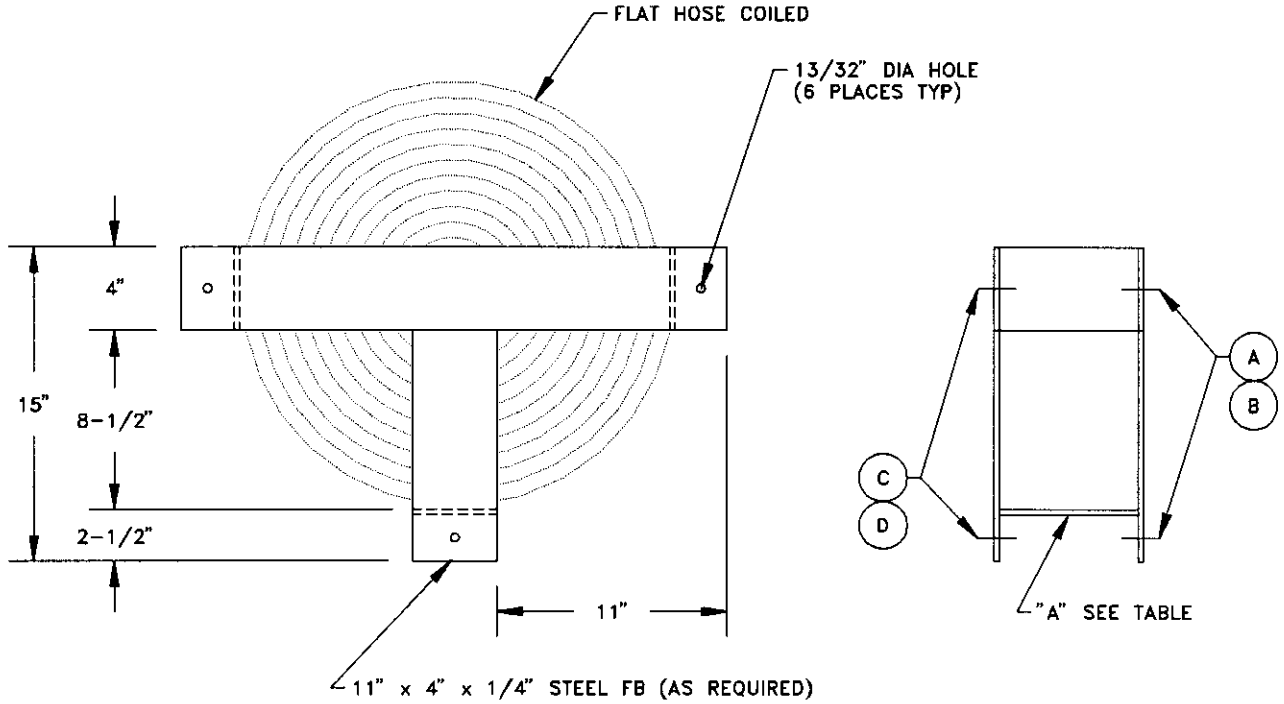

ELEVATION **SIDE VIEW**

DAMAGE CONTROL EQUIPMENT STOWAGE SKETCH # 054

HOSE STOWAGE (CRADLE)
VERSION 2

DCES054

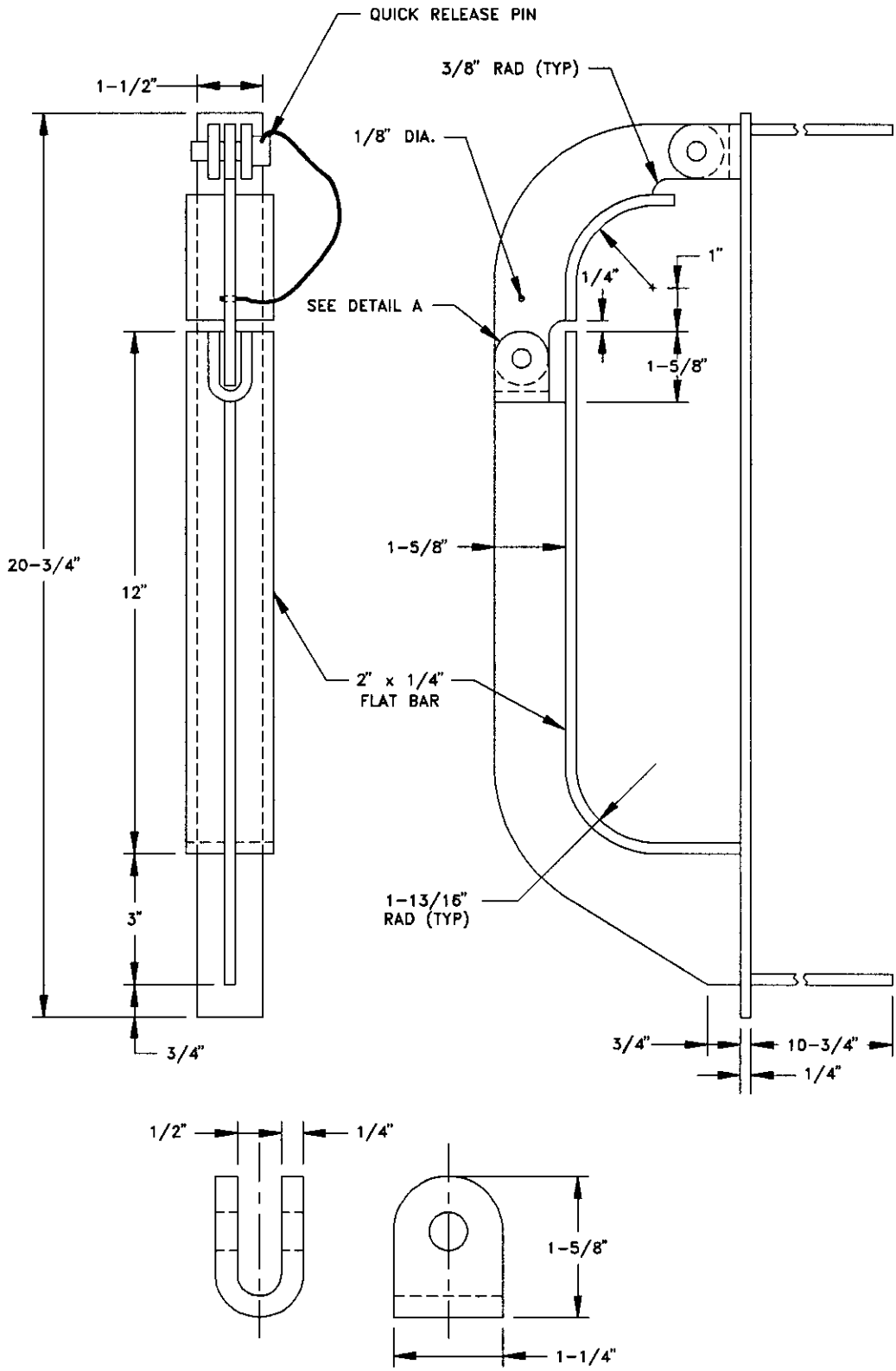

DETAIL A

DAMAGE CONTROL EQUIPMENT STOWAGE SKETCH # 055

HOSE STOWAGE BRACKET (FOUR 3" x 10' SUCTION ONLY)

DCES055

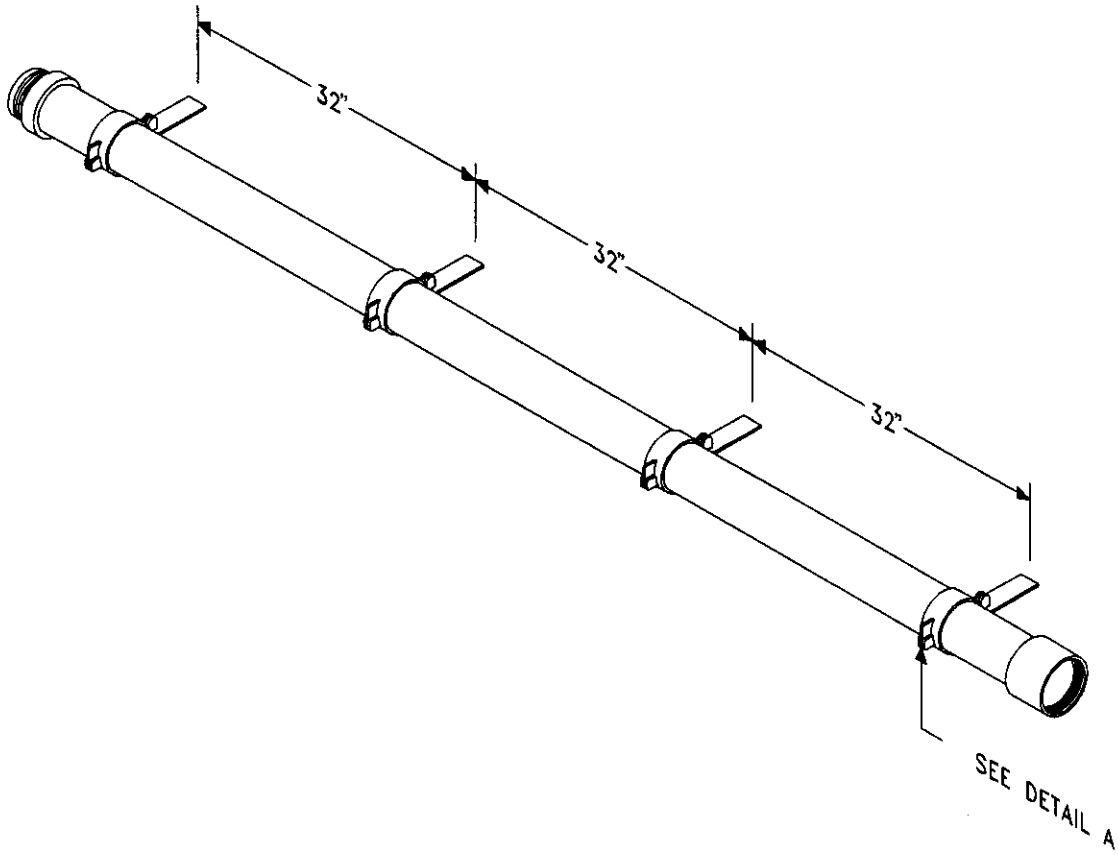

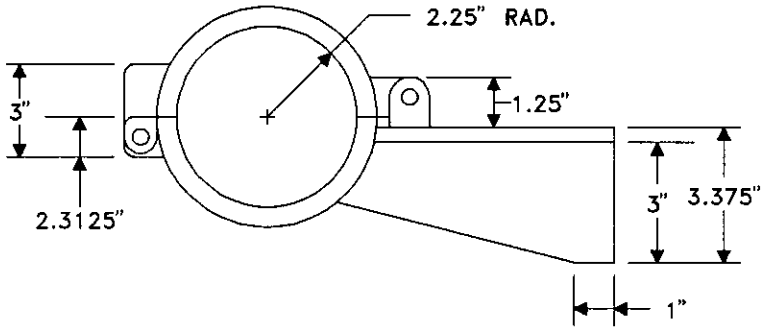

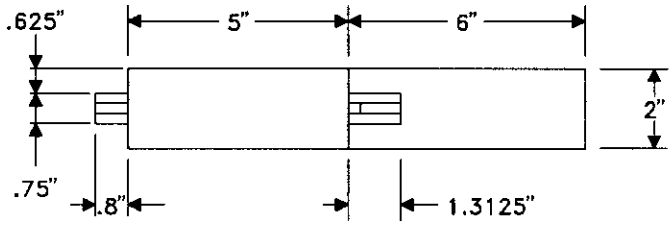

DETAIL A

DAMAGE CONTROL EQUIPMENT STOWAGE SKETCH # 056

HOSE STOWAGE RACK (ONE 4" x 10' DISCHARGE HOSE)

DCES056

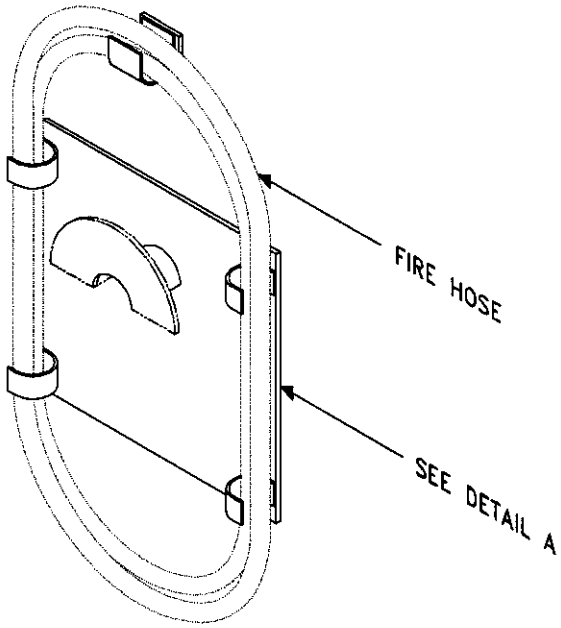

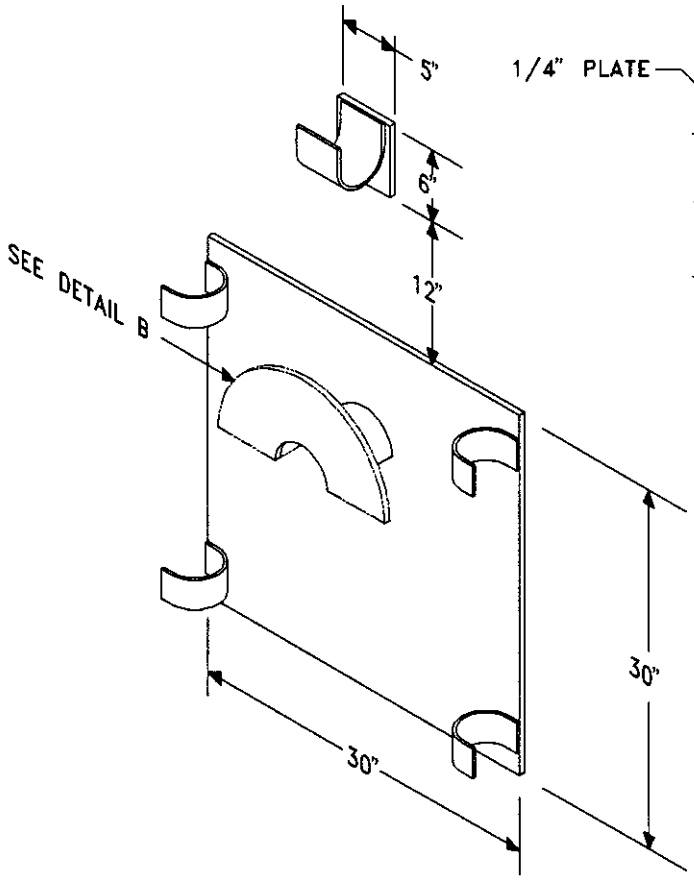

DETAIL A

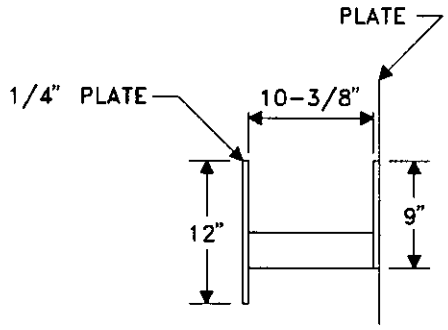

DETAIL B

DAMAGE CONTROL EQUIPMENT STOWAGE SKETCH # 057

HOSE STOWAGE RACK, ONE 2" x 20' EXHAUST RUBBER HOSE - P250 AND TWO 2-1/2" x 50' FIRE HOSE

DCES057

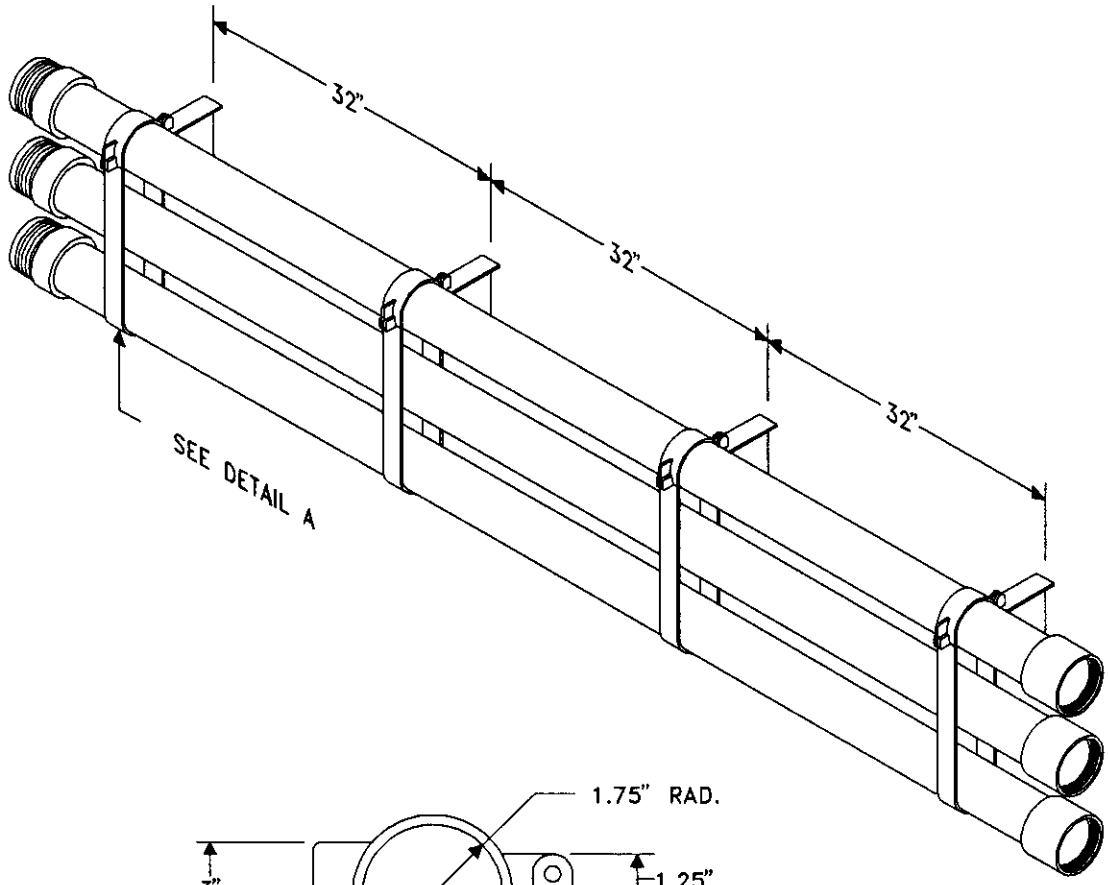

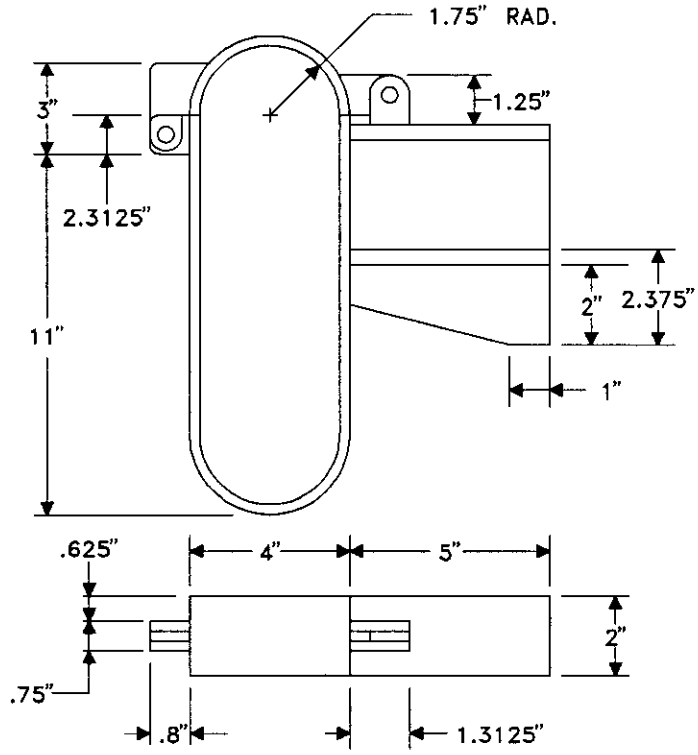

DETAIL A

DAMAGE CONTROL EQUIPMENT STOWAGE SKETCH # 058

HOSE STOWAGE RACK (THREE 3" x 10' SUCTION HOSE - P250) OR (FOUR 2-1/2" x 10' SUCTION HOSE - SUB-PUMP)

DCES058

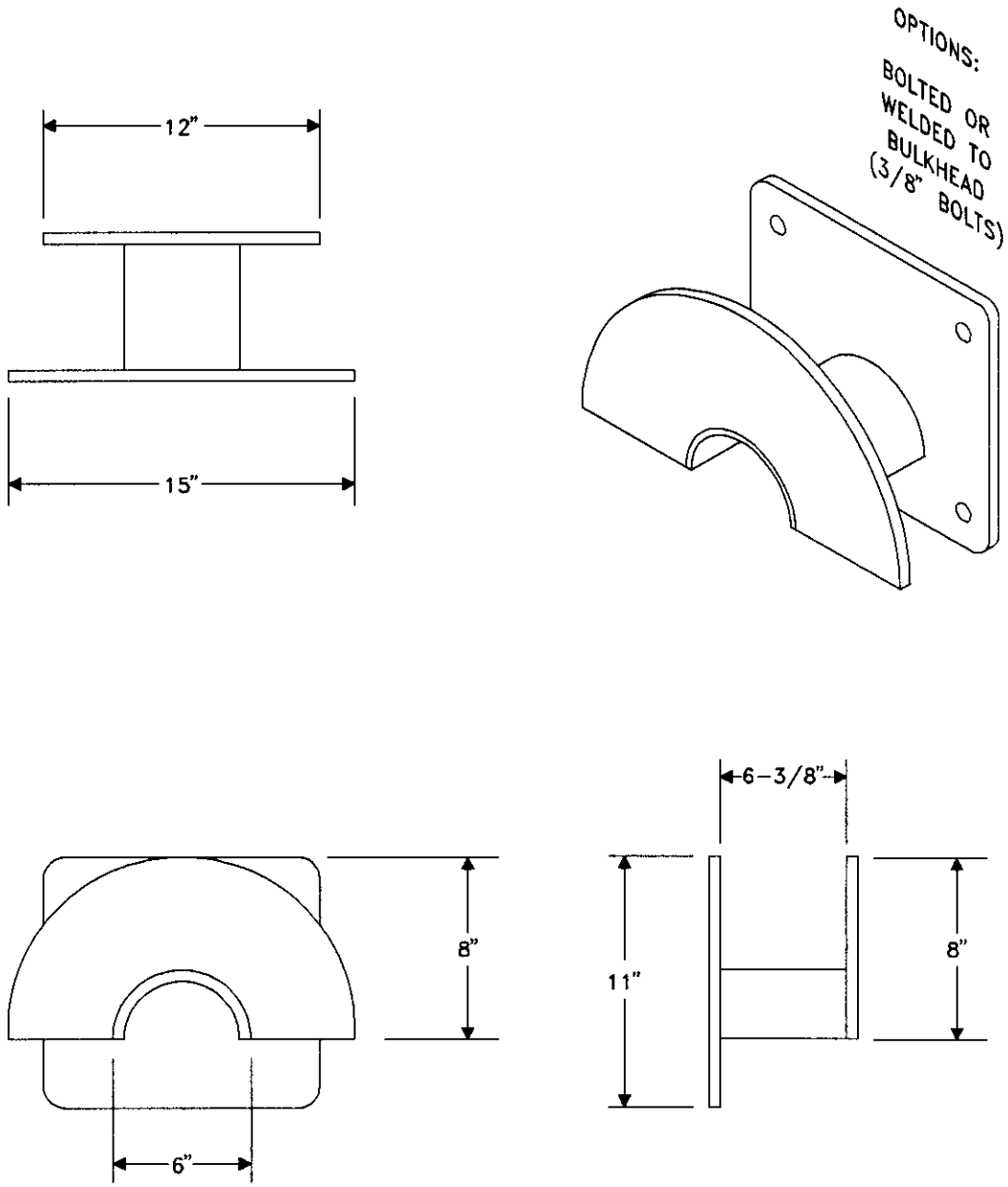

DAMAGE CONTROL EQUIPMENT STOWAGE SKETCH # 059

HOSE STOWAGE RACK (TWO 1-1/2" x 50' FIRE HOSE)

DCE5059

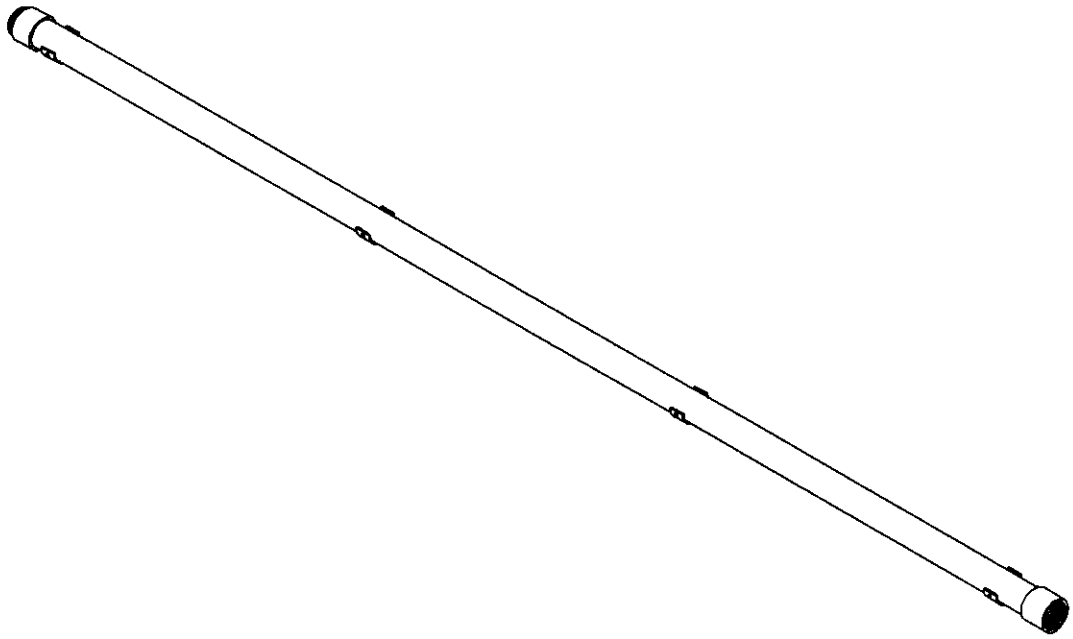

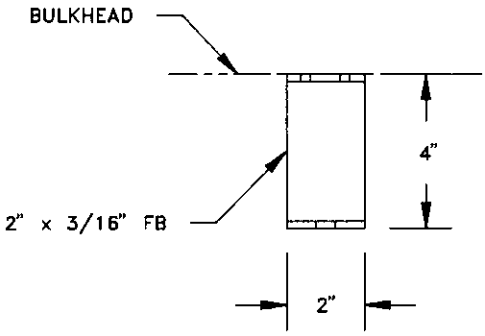

PLAN

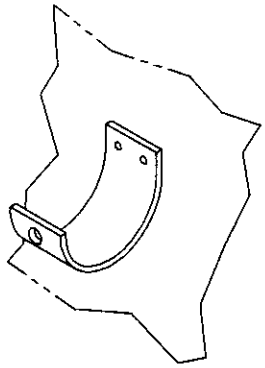

ISOMETRIC VIEW

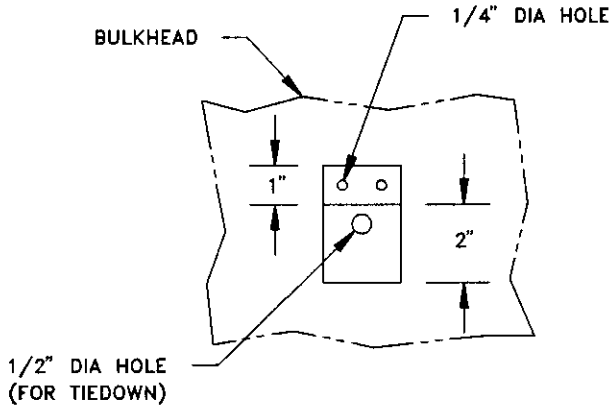

ELEVATION

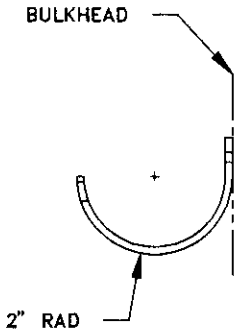

SIDE VIEW

DAMAGE CONTROL EQUIPMENT STOWAGE SKETCH # 060

HOSE STOWAGE RACK (HARD HOSE CLIPS) 10' AND 20' LENGTHS

DCES060

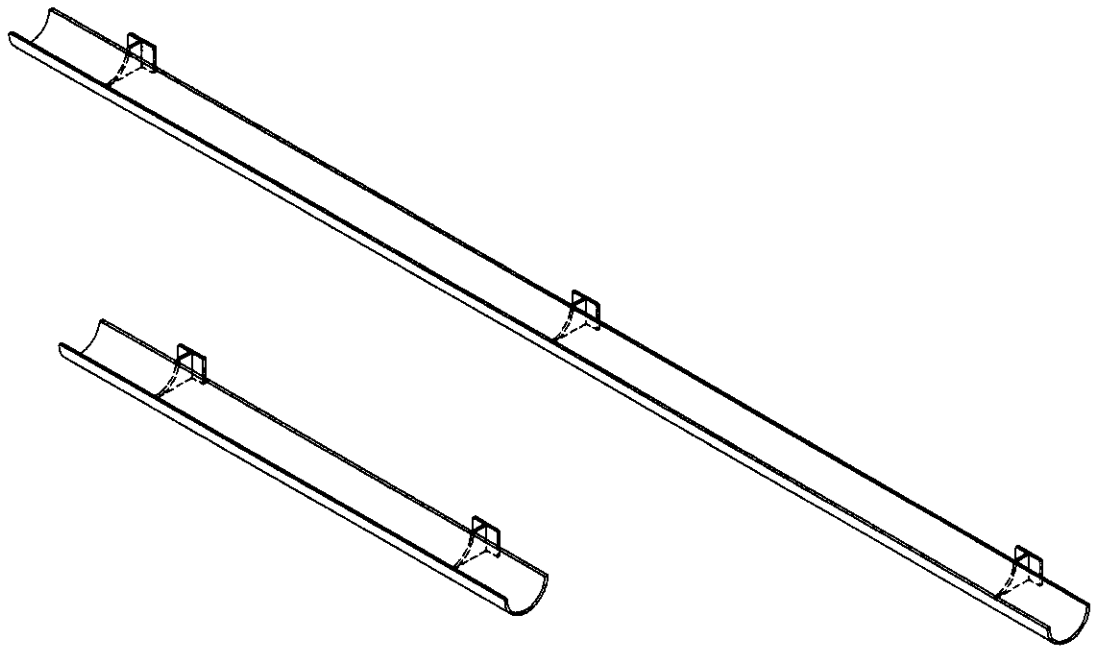

ISOMETRIC VIEW

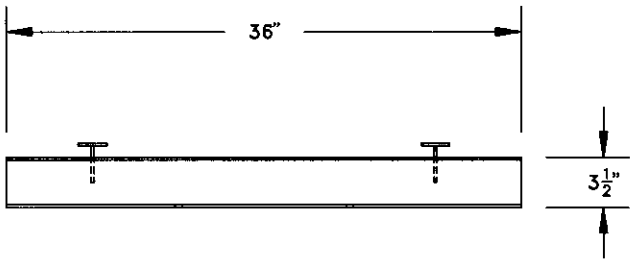

PLAN

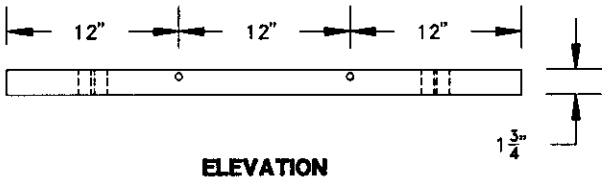

ELEVATION

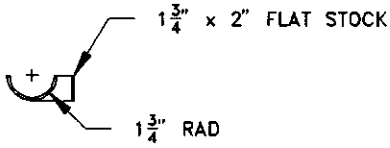

SIDE VIEW

DAMAGE CONTROL EQUIPMENT STOWAGE SKETCH # 061

HOSE STOWAGE RACK (HARD SUCTION)
3-1/2" x 36" AND 3-1/2" x 84" LENGHTS

DCES061

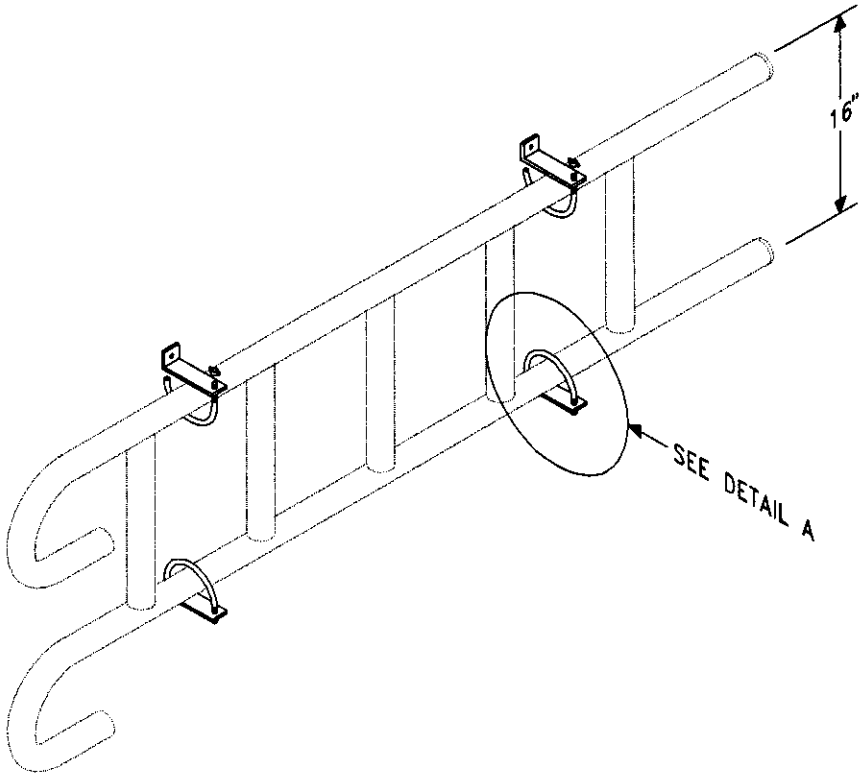

BULKHEAD MOUNTED (HORIZONTAL)

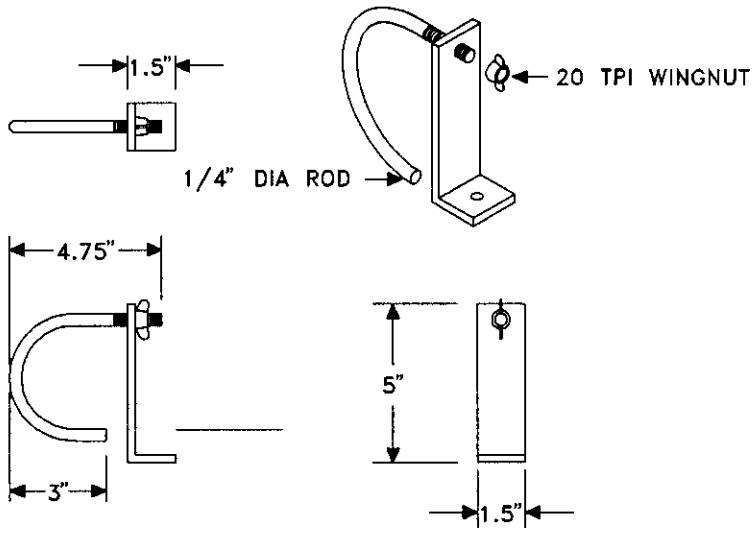

DETAIL A

DAMAGE CONTROL EQUIPMENT STOWAGE SKETCH # 062

LADDER, (6 FT SCALING) STOWAGE BRACKETS HORIZONTAL

DCES062

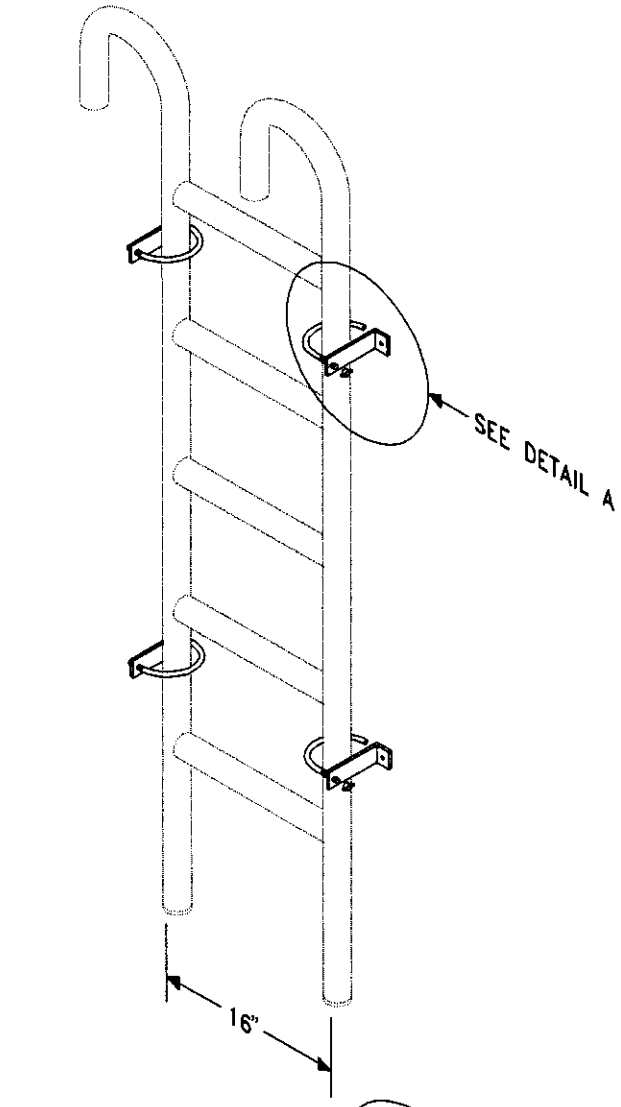

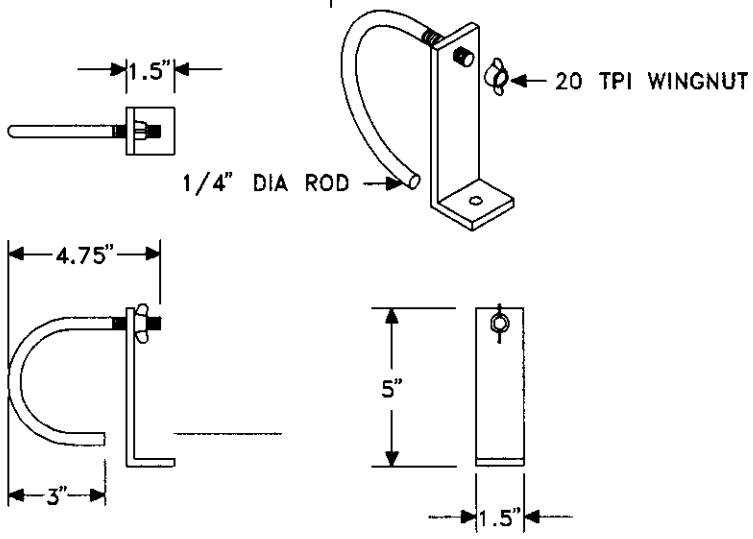

DETAIL A

DAMAGE CONTROL EQUIPMENT STOWAGE SKETCH # 063

LADDER, (6 FT SCALING) STOWAGE BRACKETS VERTICAL

DCES063

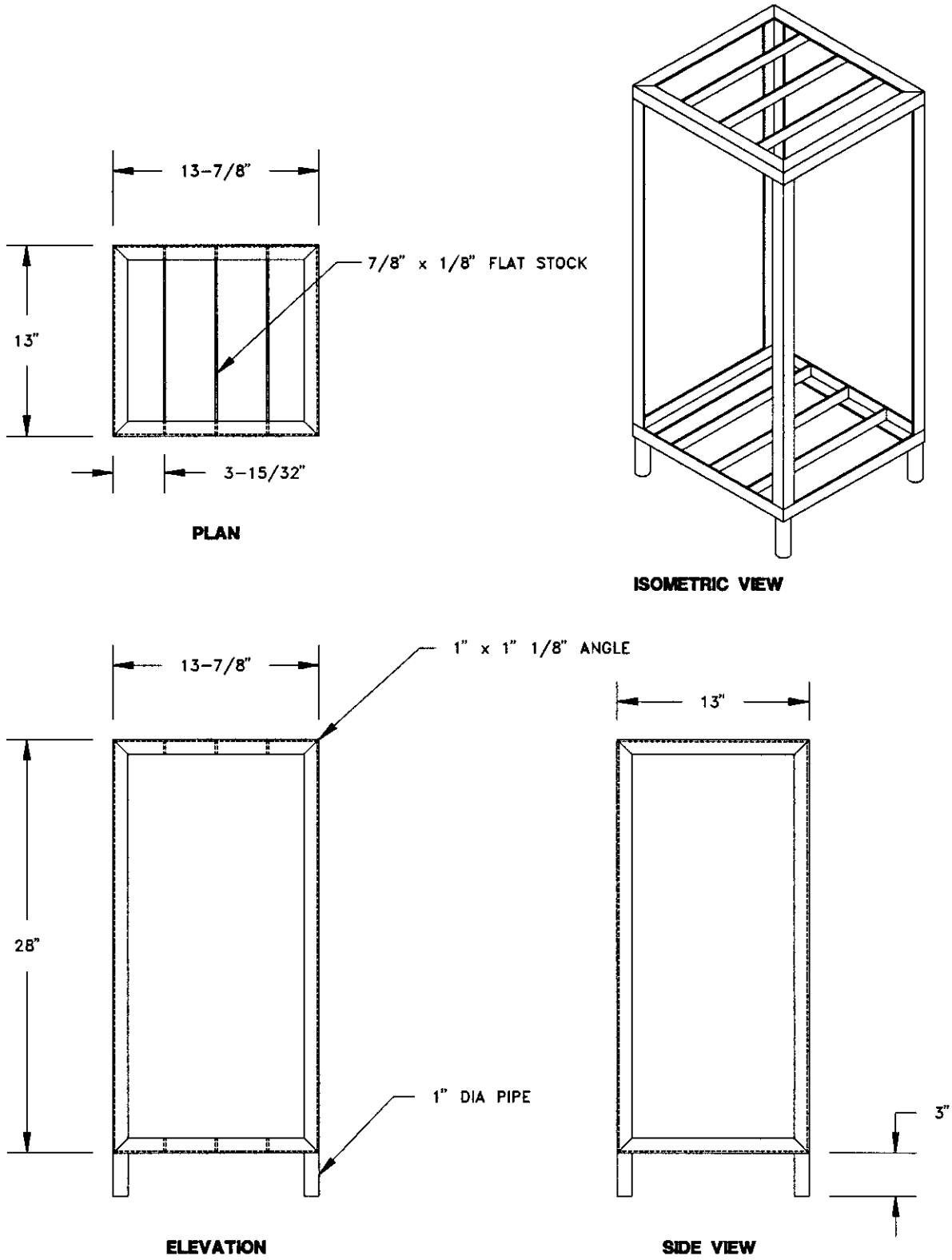

DAMAGE CONTROL EQUIPMENT STOWAGE SKETCH # 064

MISCELLANEOUS ACCESS TOOL STOWAGE RACK

DCES064

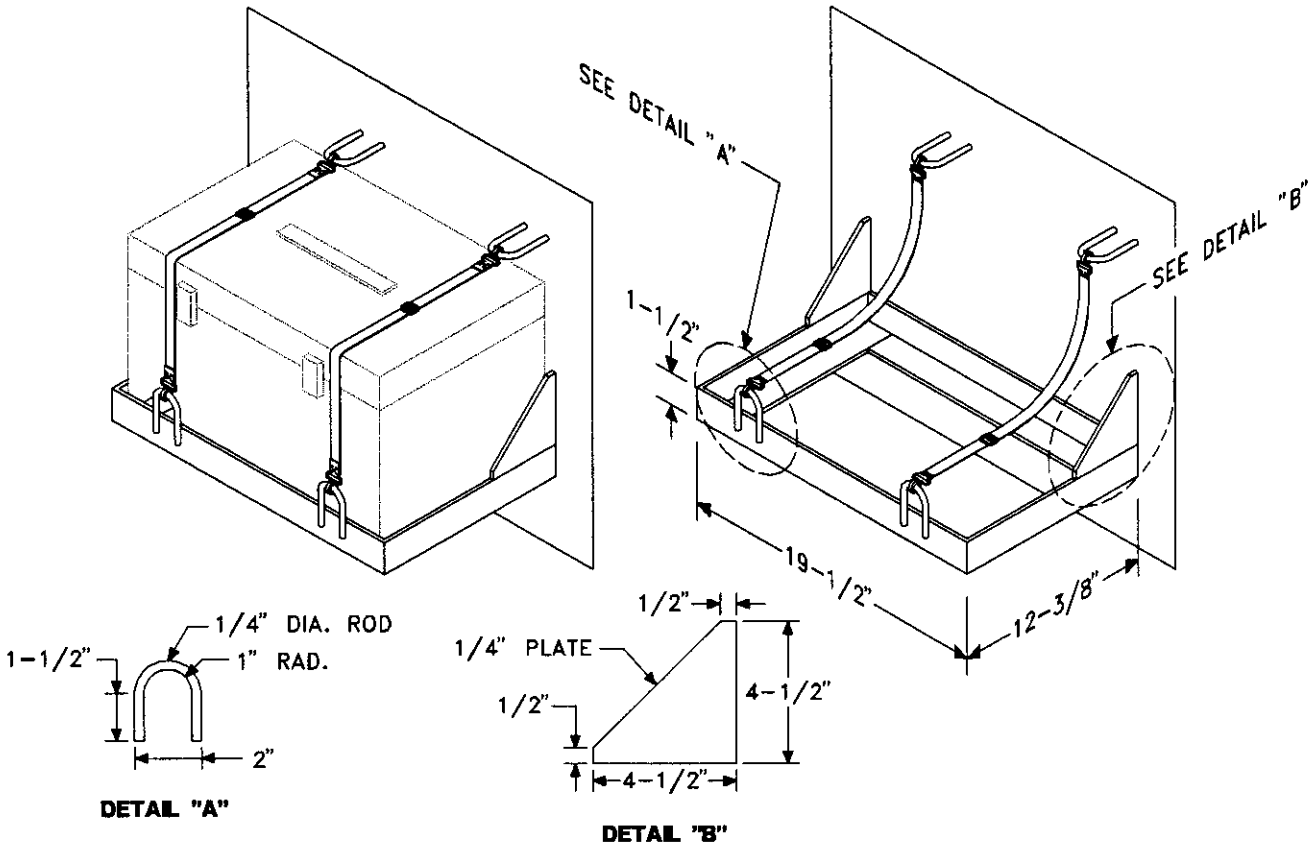

VERSION 1 (BHD MOUNT)

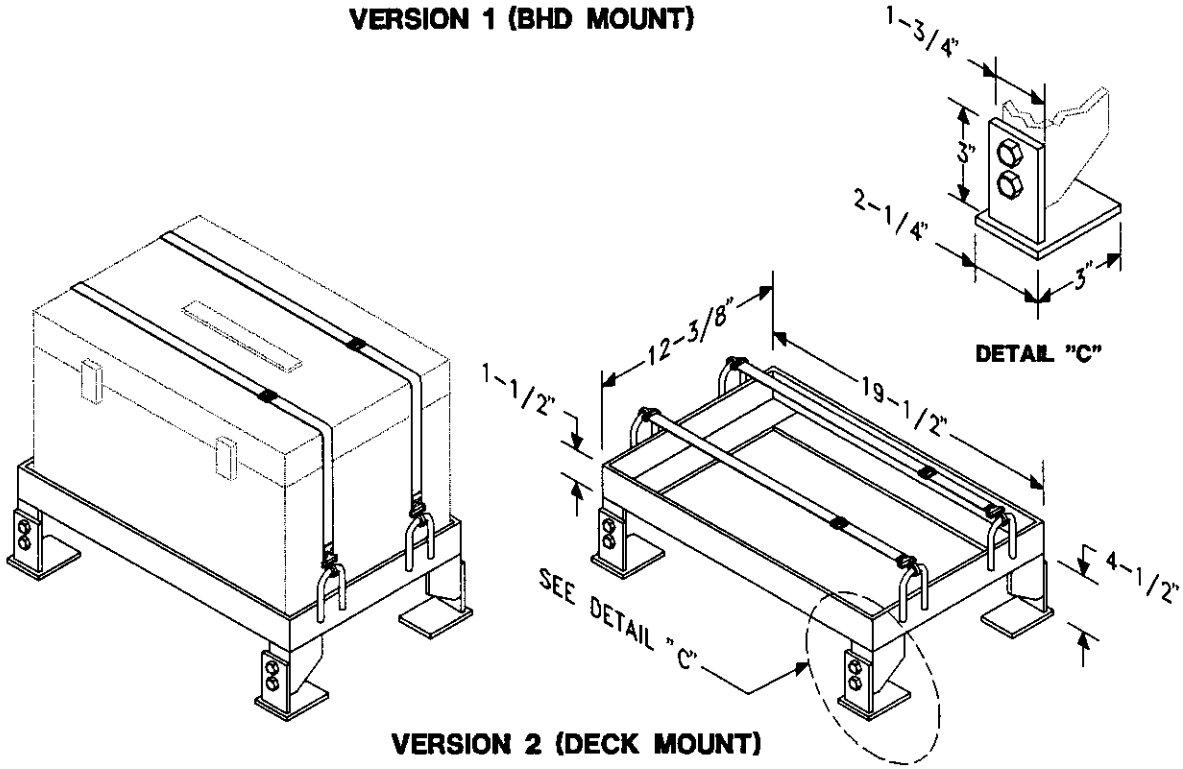

VERSION 2 (DECK MOUNT)

DAMAGE CONTROL EQUIPMENT STOWAGE SKETCH # 065

NFTI STOWAGE RACK

DCES065

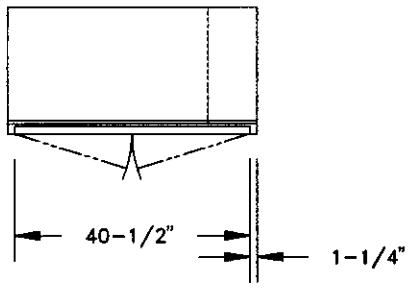

PLAN

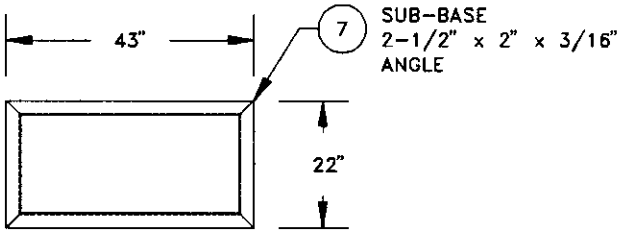

PLAN (SUB-BASE)

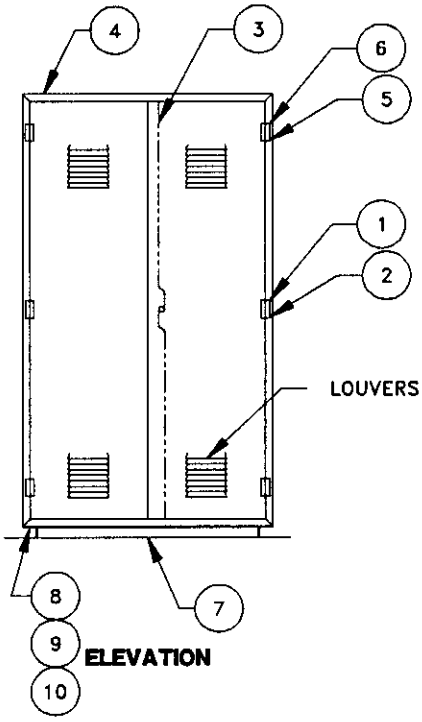

ELEVATION

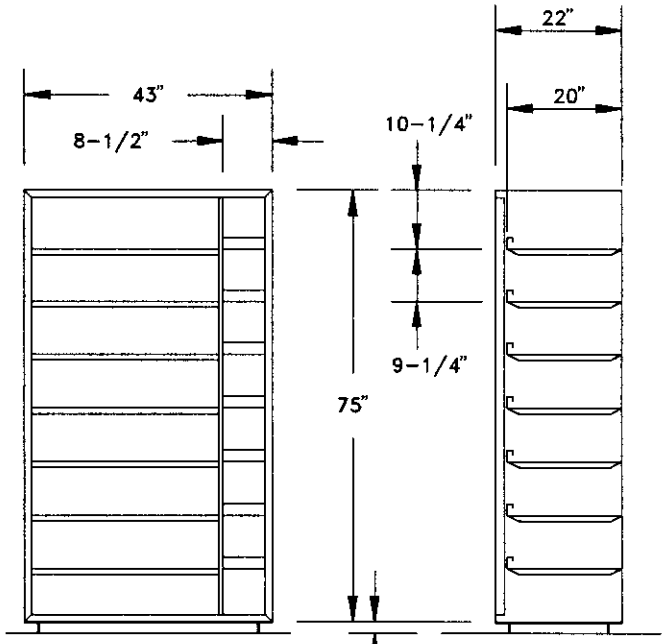

ELEVATION
(NO DOORS)

SIDE VIEW

DAMAGE CONTROL EQUIPMENT STOWAGE SKETCH # 066

OBA & OBA CANISTER STOWAGE LOCKER
PAGE 1 OF 2

DCES066A

	ASSY	LIST OF MATERIAL			
QTY	PART NO.	NAME	MATERIAL	REFERENCES	REMARKS
6	1	HINGE, 2" x 1-5/8"	STL CAD PLTD	NN STOCK 17-15-302	
6	2	ANTI-RATTLER	RUBBER PURE GUM		
1	3	LOCKING DEVICE	SEE DET DWG	ASSY64, REF 6	
1	4	LOCKER	SEE DET DWG	REF 5	
12	5	HUCK RIVET SELF PLUGGING BLIND NO. P-6-D	ALUMINUM		
12	6	HUCK COMMERCIAL LOCK BOLT NO. CLPB F6-2	ALUMINUM		
12LF	7	ANGLE, BASE, 2-1/2" x 2" x 3/16"	MED STL		
22	8	BOLT, 1/4"-20UNC 2A	STL (ZINC COAT)		L-3/4"
22	9	NUT, HEX, 1/4"-20UNC 2B	STL (ZINC COAT)		
22	10	WASHER, LOCK	STL (ZINC COAT)		

DAMAGE CONTROL EQUIPMENT STOWAGE SKETCH # 066

OBA & OBA CANISTER STOWAGE LOCKER
PAGE 2 OF 2

DCES066B

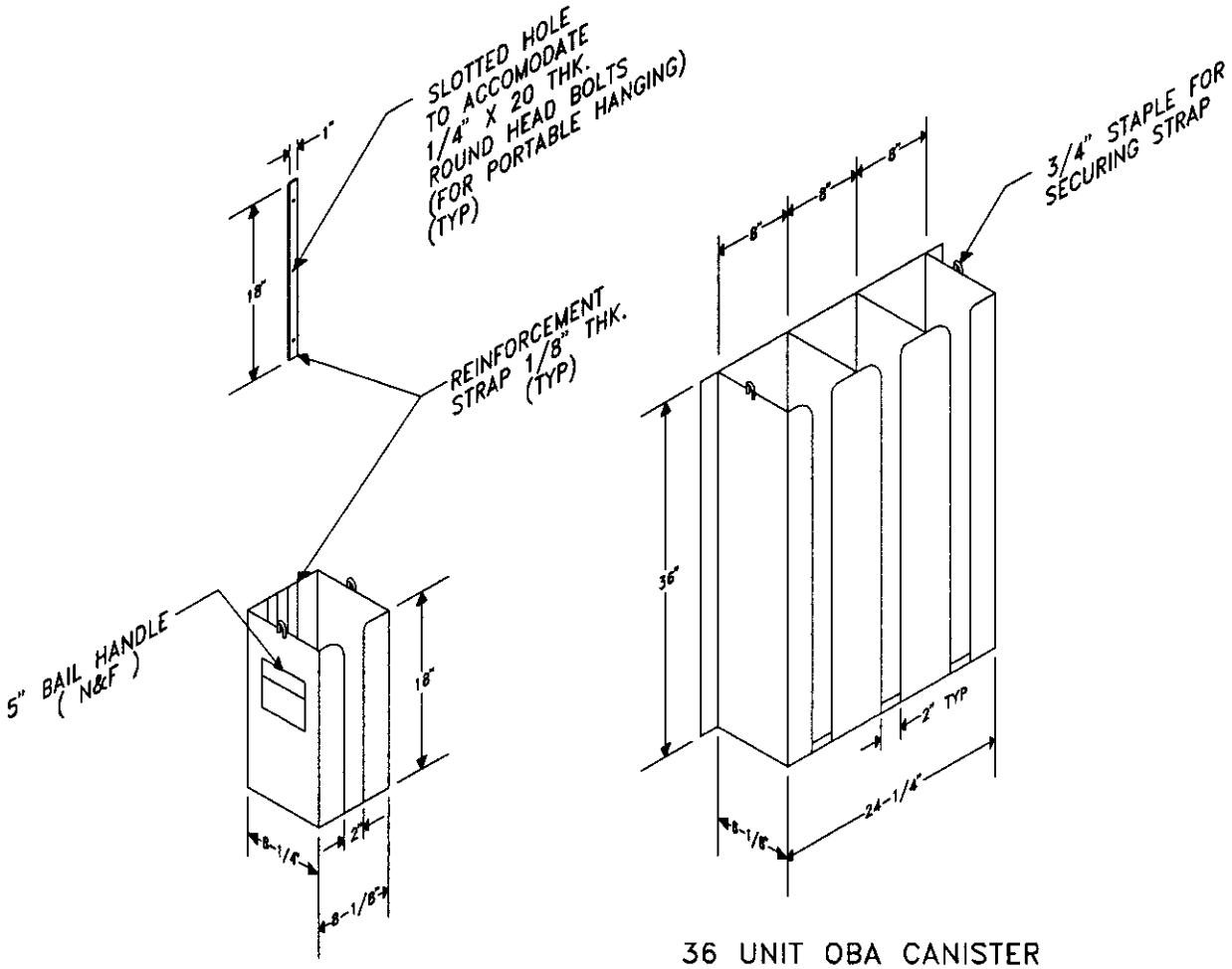

SIX UNIT OBA CANISTER
STOWAGE RACK
READY SERVICE, PORTABLE

36 UNIT OBA CANISTER
STOWAGE RACK
READY SERVICE

NOTE:
MATERIAL TO BE .0625"
ALUMINUM SPOT WELDED.

DAMAGE CONTROL EQUIPMENT STOWAGE SKETCH # 067

OBA CANISTER STOWAGE (RACK)
VERSION 1

DCES067

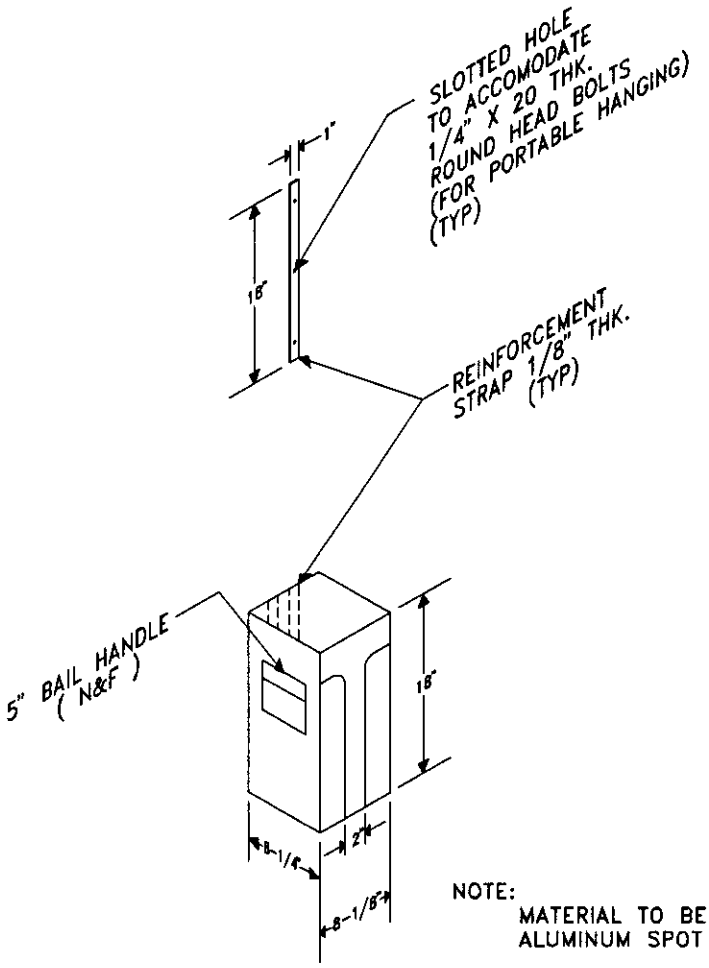

NOTE:
MATERIAL TO BE .0625"
ALUMINUM SPOT WELDED.

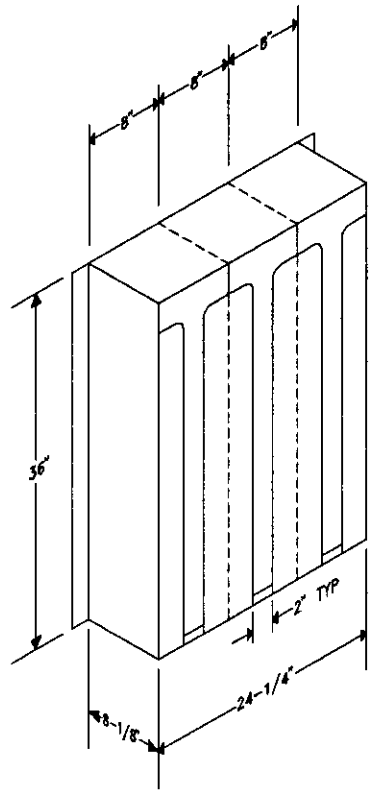

SIX UNIT OBA CANISTER
STOWAGE RACK
READY SERVICE, PORTABLE

36 UNIT OBA CANISTER
STOWAGE RACK
READY SERVICE

DAMAGE CONTROL EQUIPMENT STOWAGE SKETCH # 068

OBA CANISTER STOWAGE (RACK)
VERSION 2

DCES068

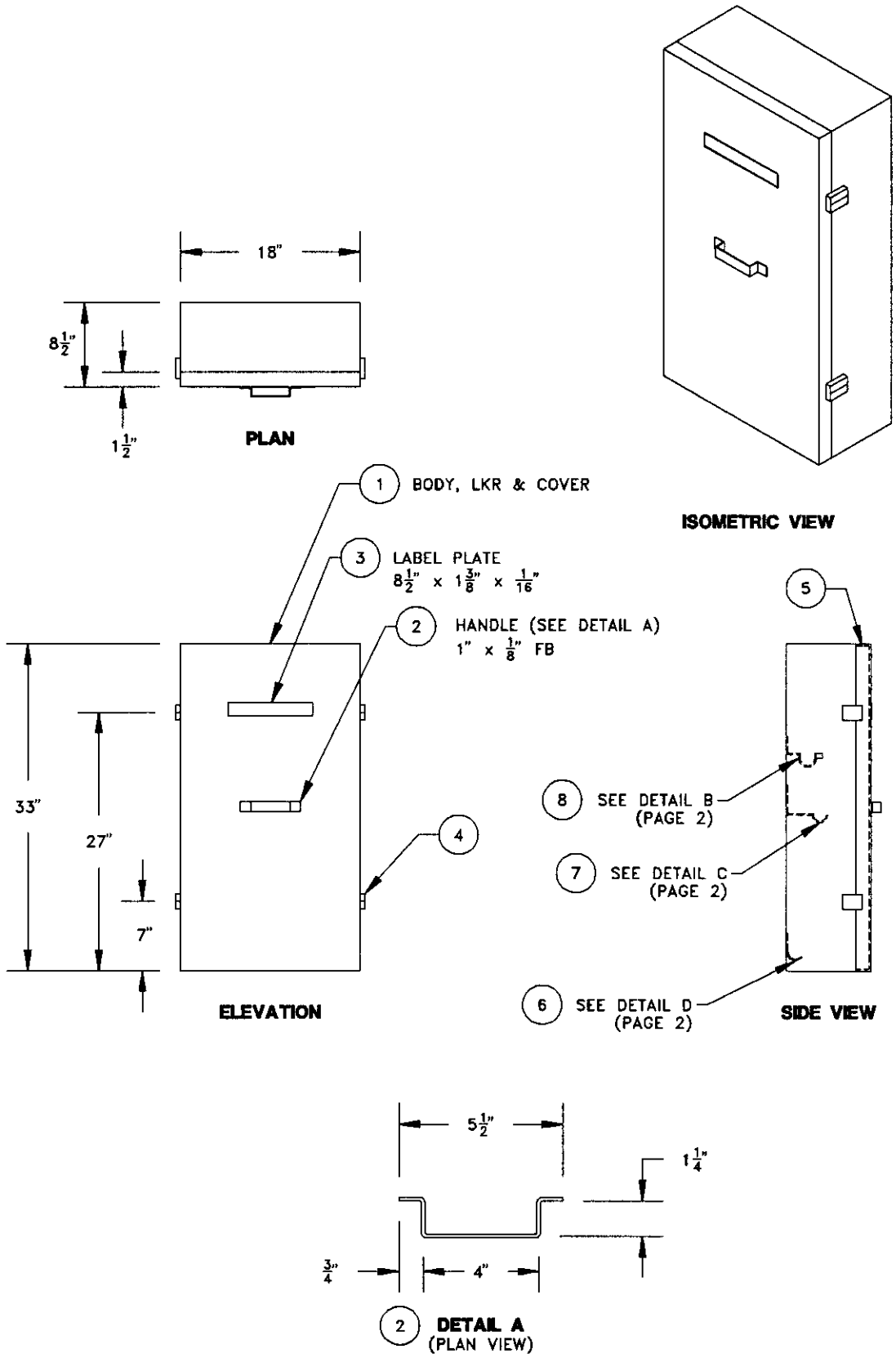

DAMAGE CONTROL EQUIPMENT STOWAGE SKETCH # 069

OBA STOWAGE LOCKER, SINGLE UNIT
(PAGE 1 OF 3)

DCES069A

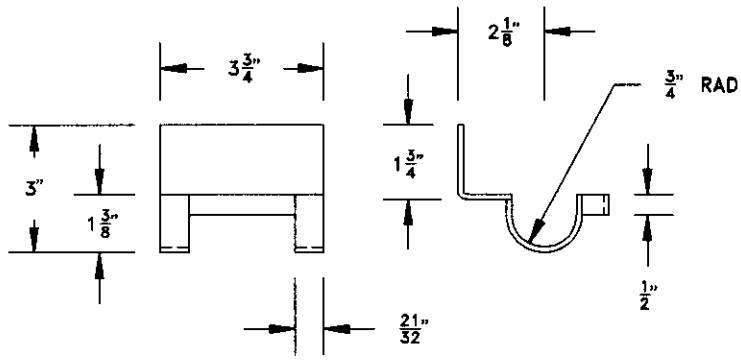

8 **DETAIL B**

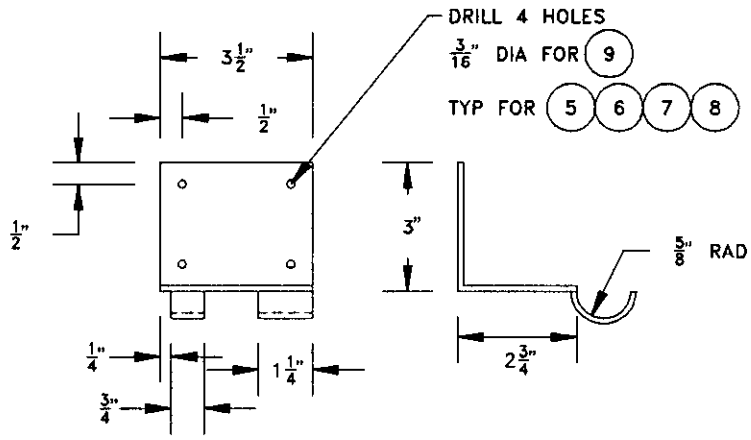

7 **DETAIL C**

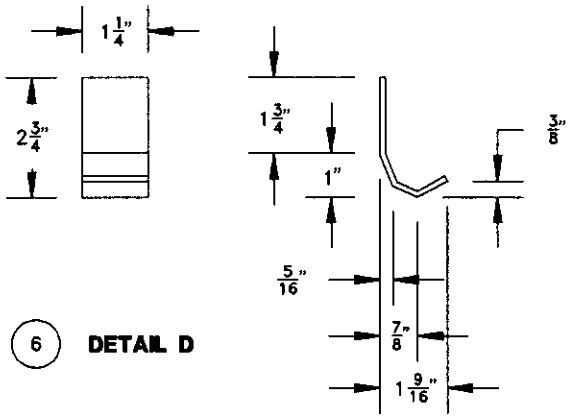

6 **DETAIL D**

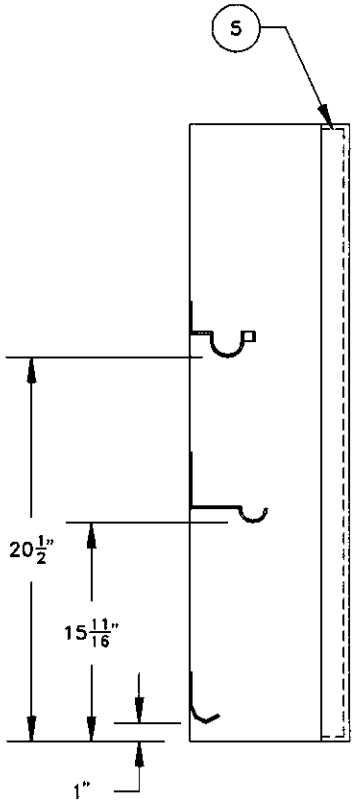

DAMAGE CONTROL EQUIPMENT STOWAGE SKETCH # 069

OBA STOWAGE LOCKER, SINGLE UNIT
(PAGE 2 OF 3)

DCES069B

	ASSY	LIST OF MATERIAL			
QTY	PART NO.	NAME	MATERIAL	REFERENCES	REMARKS
2	1	BODY, LKR & COVER	AL ALY5052 H32 ASTM-B-209		.080" THK
2	2	HANDLE	AL ALY5052 H32 ASTM-B-209		.125" THK, 1" WIDE
1	3	PLATE, LABEL, .062	CRES-CL-304 QQ-S-766		POLISHED (1) SIDE
8	4	CATCH, DRAW PULL	STL ZINC PL		TO CORBIN 15824ZP
2	5	SHEET, RUBBER 1/16" THK	SYN RUBBER MIL-R-900		
2	6	BRACKET, SUPPORTING	AL ALY5052 H32 ASTM-B-209		.125" THK,
1	7	BRACKET, RETAINING	AL ALY5052 H32 ASTM-B-209		.125" THK
1	8	SUPPORT, MASK	AL ALY5052 H32 ASTM-B-209		.125" THK,
28	9	RIVET, BLIND DH 1/8" DIA.	AL ALY MIL-R-24243		6-A-606F

DAMAGE CONTROL EQUIPMENT STOWAGE SKETCH # 069

OBA STOWAGE LOCKER, SINGLE UNIT
(PAGE 3 OF 3)

DCES069C

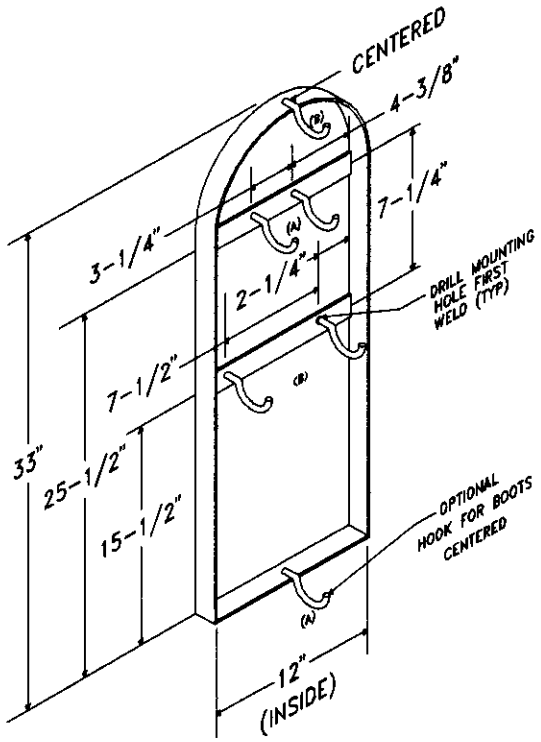

MATERIAL

FRAME:
- PLATE OR BAR STOCK
- 3/16" x 1-1/2" ALUMINUM

HOOKS:
- 3/8" DIAMETER
- ALUMINUM ROD
- SERIES 5062

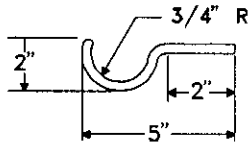

A (Qty 3)

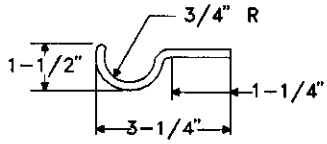

B (Qty 3)

ALTERNATE METHODS

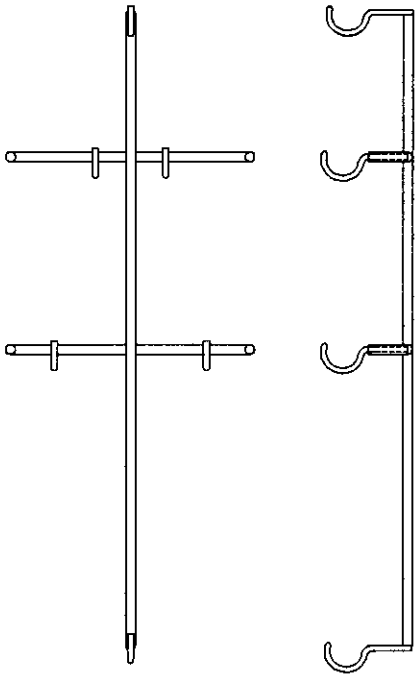

ALL BAR STOCK

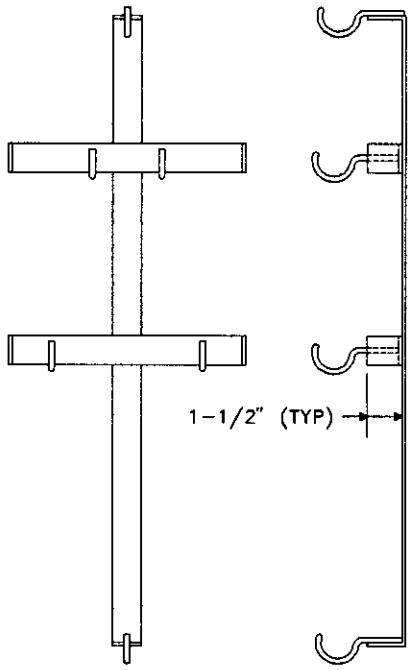

ALL PLATE

DAMAGE CONTROL EQUIPMENT STOWAGE SKETCH # 070

OBA STOWAGE RACK
VERSION 1

DCES070

MATERIAL

FRAME: Aluminum Flat Bar
1 ea 3/16" X 1-1/2" X 11-5/8"
1 ea 3/16" X 1-1/2" X 78-1/2"
2 ea 3/16" X 1" X 6"
Aluminum Plate
1 ea 3/16" X 5-1/2" X 17-1/4"
1 ea 3/16" X 6" XS 11-5/8"
STRAP:
1 ea 1/8" X 3/4" X 13-1/2" rubber with 3/4" hook (each end)
2 ea 1/16" X 5/8" X 7-1/2" canvas straps with lock snap assembly
8 ea holes in mounting plate 5/16" DIA

For stowage of:

1 OBA
1 Cannister
1 Set of anti-flash gear

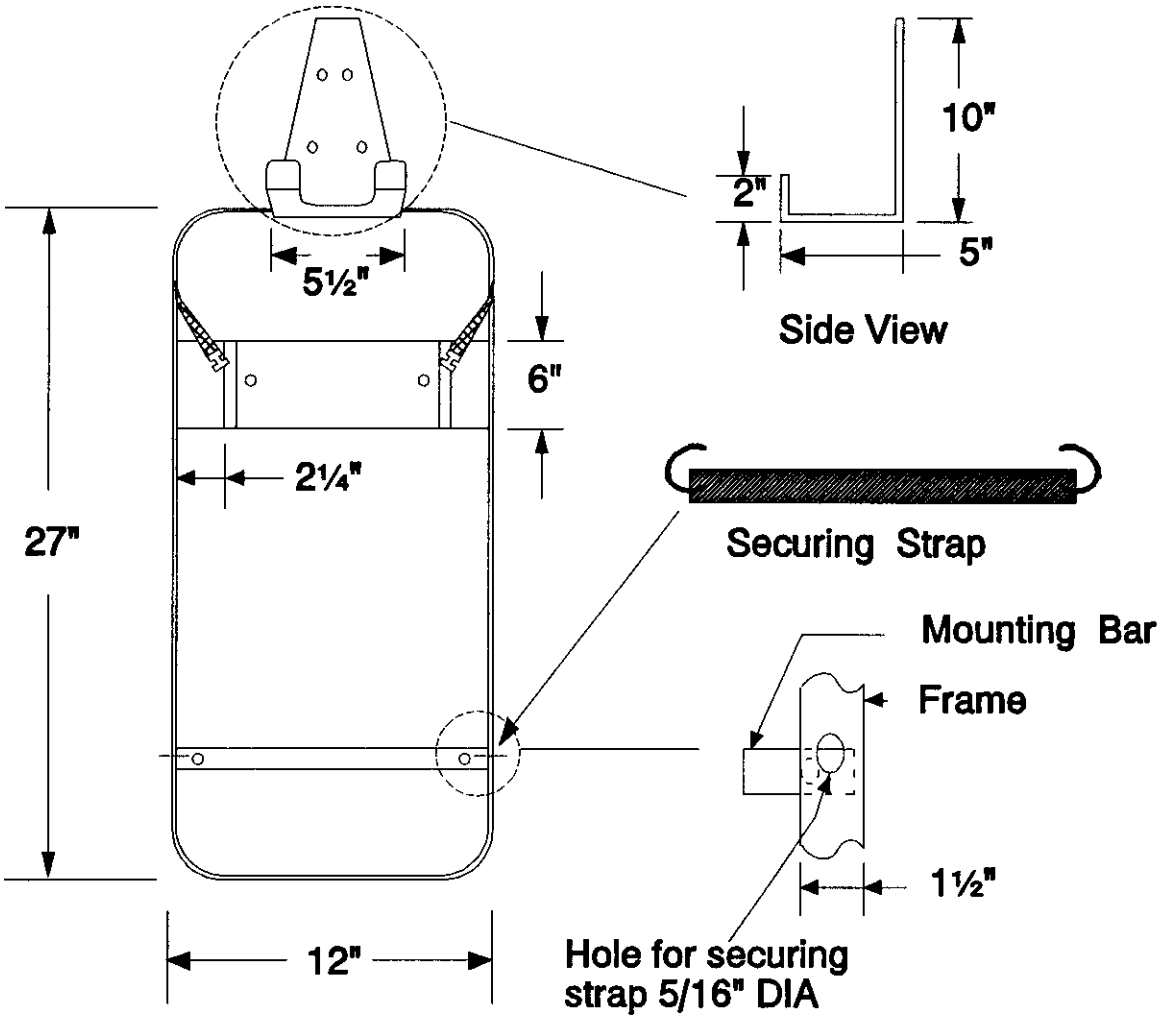

DAMAGE CONTROL EQUIPMENT STOWAGE SKETCH #071

OBA STOWAGE RACK
VERSION 2

P250 ACCESSORIES EQUIPMENT LOCKER (PORTABLE)

ALUMINUM OR STEEL

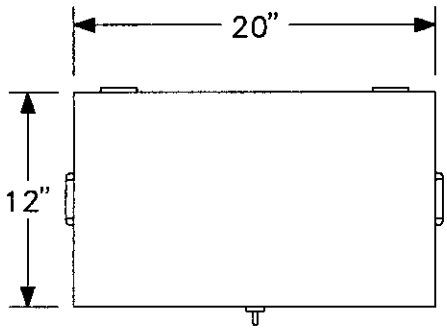

PLAN

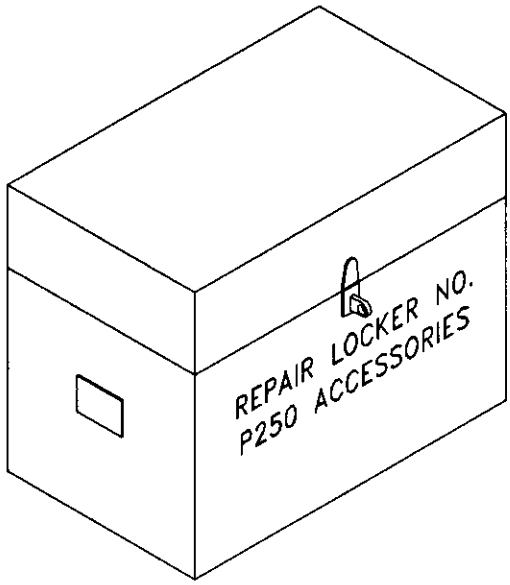

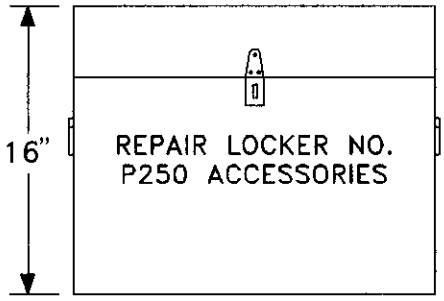

ELEVATION

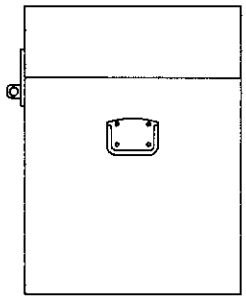

END VIEW

NOTES:

1. MATERIALS:
   ALUMINUM – WHEN MADE IN ACCORDANCE WITH NAVSHIPS DWG. # 53702–921575, MODIFIED.
   STEEL – WHEN IN ACCORDANCE WITH NAVSHIPS DWG. # 53702–860360, MODIFIED.
2. FINISH AS SPECIFIED.
3. STENCIL REPAIR LOCKER NO.___ AND P250 ACCESSORIES ON WHITE BACKGROUND 2" RED LETTERS.
4. INSTALL ON 6" FOUNDATION.
5. JAMESTOWN METAL DRAWING SK 358U.

DAMAGE CONTROL EQUIPMENT STOWAGE SKETCH # 072

P250 EQUIPMENT ACCESSORY STOWAGE

DCES072

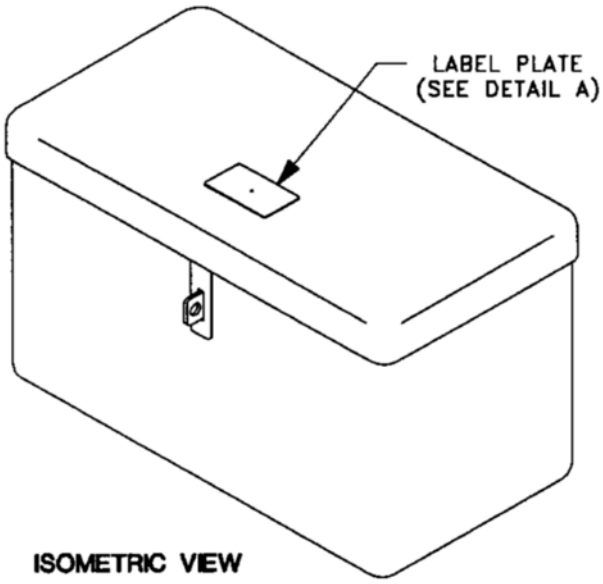

ISOMETRIC VIEW

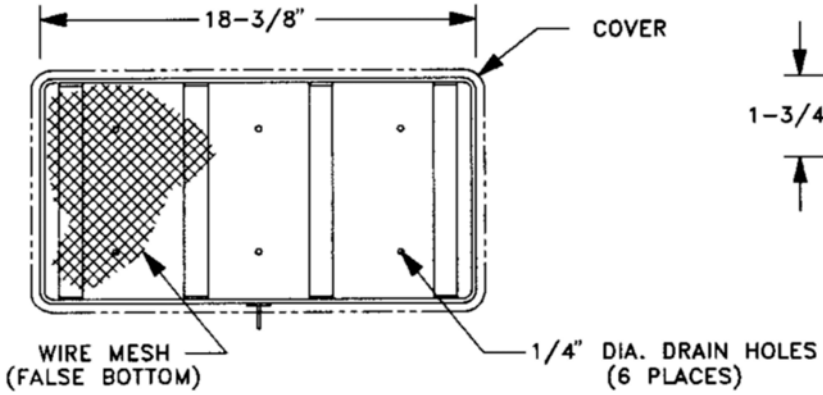

PLAN VIEW

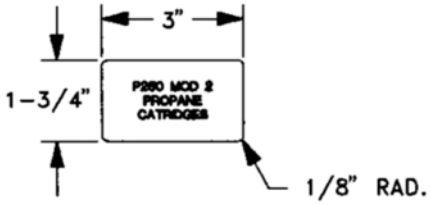

DETAIL A

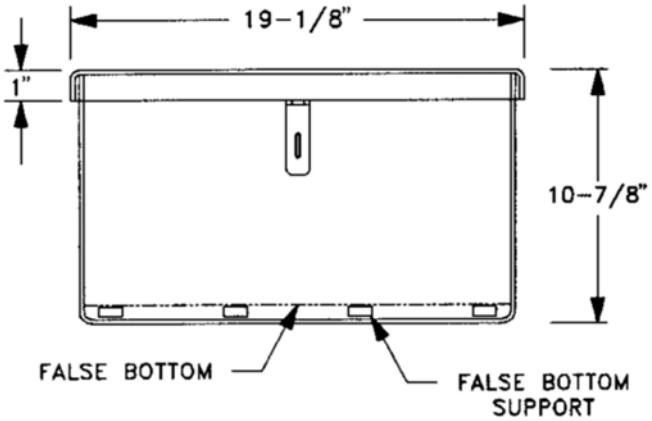

ELEVATION

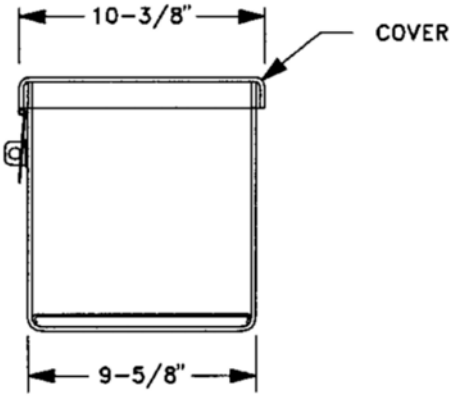

SIDE VIEW

DAMAGE CONTROL EQUIPMENT STOWAGE SKETCH # 073

P-250 MOD 2 PROPANE CARTRIDGE STOWAGE

DCES073

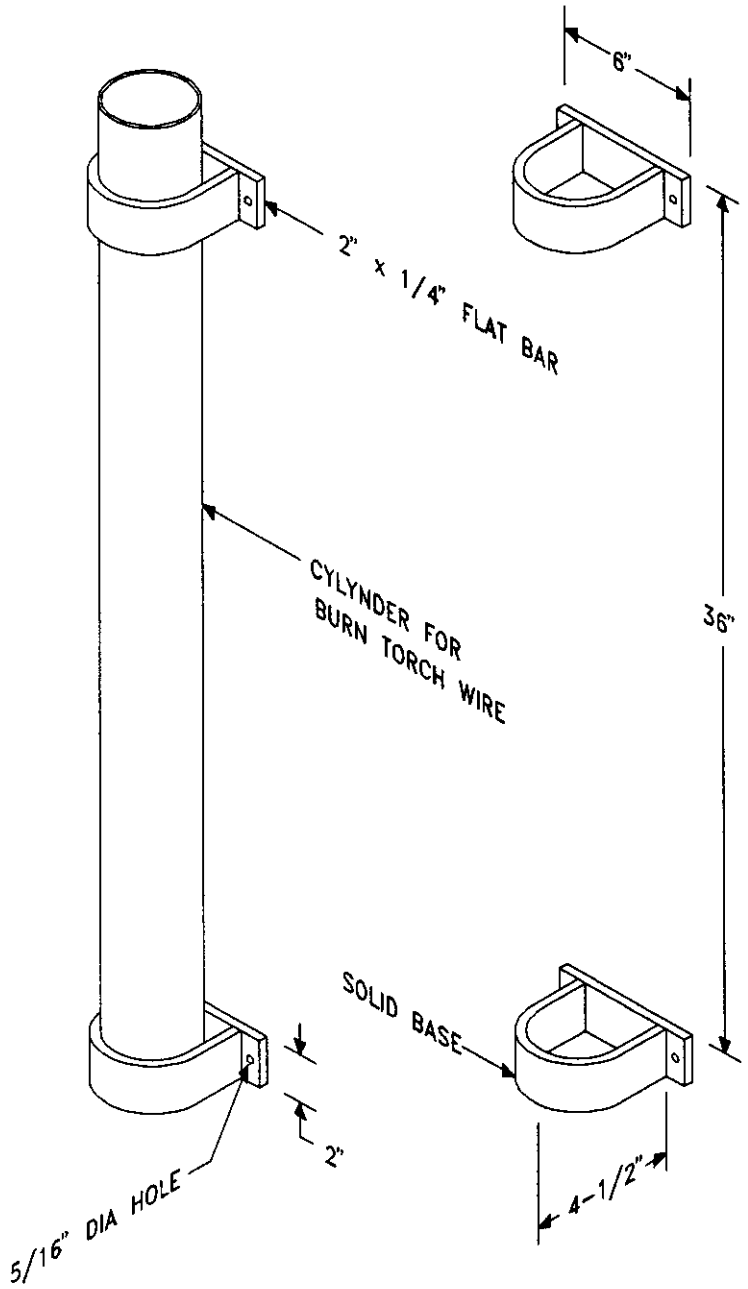

DAMAGE CONTROL EQUIPMENT STOWAGE SKETCH # 074

PECU ROD STOWAGE

DCES074

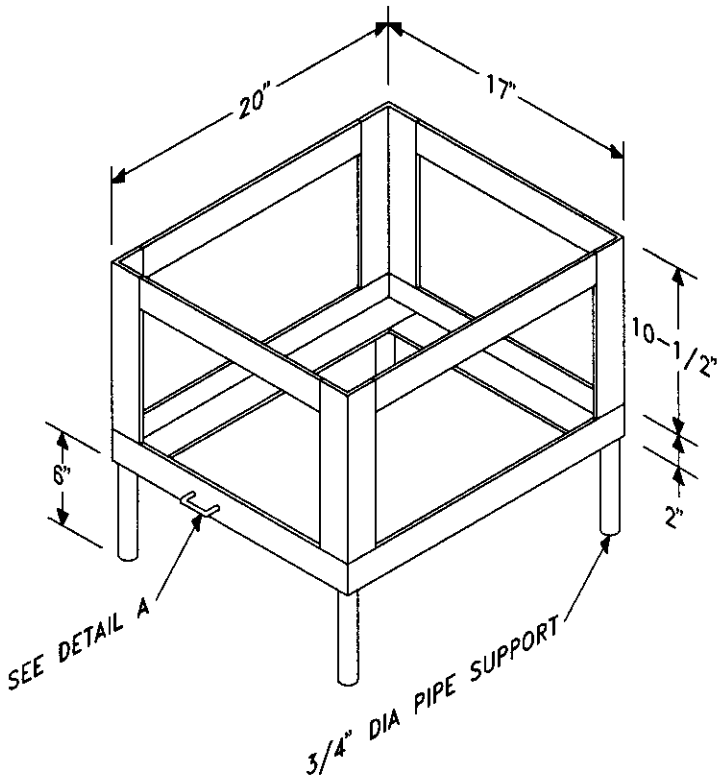

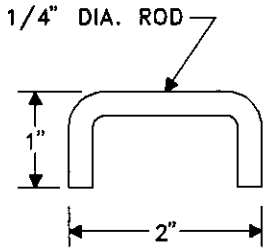

DETAIL A

DAMAGE CONTROL EQUIPMENT STOWAGE SKETCH # 075

PECU STOWAGE BRACKET FOUNDATION

DCES075

[BUILT-IN CAGE USING EXISTING STRUCTURE]

① OBA CANISTERS READY SERVICE STOWAGE RACK PORTABLE (6 EACH)

② SPACE FOR OBA or FFBA STOWAGE RACK (6 EACH)

③ FFE SUIT (HANGING STOWAGE HOOK) (2 EACH)

④ OPTIONAL SHELF FOR STOWAGE OF GAS MASK & LIFE-JACKETS (6 EACH)

⑤ FIREMEN'S HELMETS MK1 MOD2 (6 EACH)

⑥ BOOTS (FIREMEN'S) TO SIT ON DECK (6 PAIR)

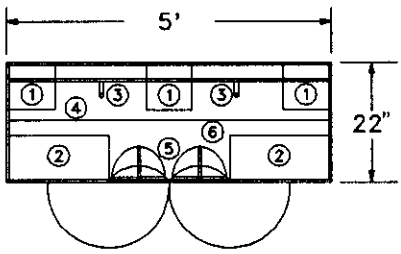

PLAN

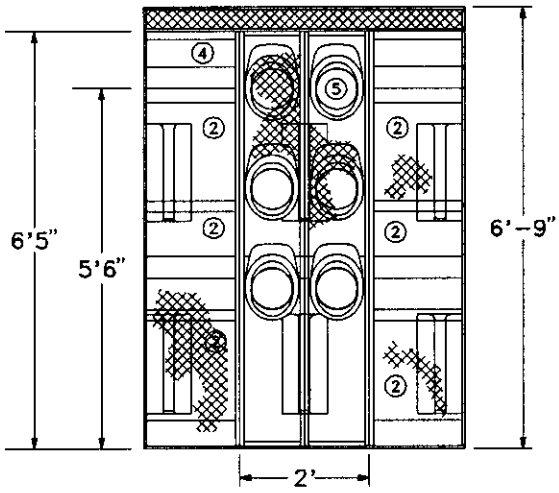

ELEVATION
(DOORS CLOSED)

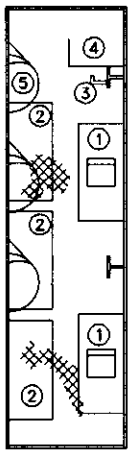

SECTION

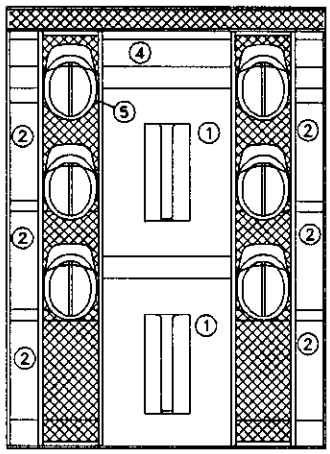

ELEVATION
(DOORS OPEN)

NOTES:

1. ANTI-FLASH GEAR TO BE STOWED IN FIREMEN'S HELMET.
2. GLOVES (FIREMEN) TO BE STOWED IN FFE SUIT POCKETS.
3. DOORS TO BE SECURED WITH (2) 2-1/2" BARREL BOLTS, 18" FROM TOP/BOTTOM OF DOOR.
4. CAGE TO BE CONSTRUCTED BY 3/8" EXPANDED METAL STEEL
5. ALL FRAMING MATERIALS ARE 1-1/2" ANGLE STEEL.
6. DOOR HINGES ARE 3" STRAP HINGE.
7. (2) 5/8" EYE HOOKS SHALL BE INSTALLED ON OUTSIDE EDGE TOP OF THE DOOR FRAME TO SECURE DOOR IN OPEN POSITION.
8. (2) 5/8" EYES TO SECURE BUNGI CORD INSTALLED 1' ABOVE THE DECK, 14" APART DIRECTLY BELOW HANGER HOOKS.
9. INSTALL BUTTERFLY CLIPS IAW NAVSEA SKETCH NO. DC 0003 TO MOUNT HELMETS.
10. INSTALL OBA RACKS IAW NAVSEA SKETCH NO. DC 0011.
11. FABRICATE AND INSTALL PORTABLE CANISTER RACK IAW NAVSEA SKETCH NO. DC 0004.
12. HANGING HOOK TO BE FABRICATED FROM 5/8" ROUND STOCK - STEEL BY 6" LONG.
13. FABRICATE 4" X 4" X 1/8" STEEL BACKING PLATE, WELD TO EXPANDED METAL GAGE TO MOUNT OBA CANISTER RACK WITH 1/4" X 20 THD R/H SCREWS.

DAMAGE CONTROL EQUIPMENT STOWAGE SKETCH # 076

PERSONNEL PROTECTION EQUIPMENT STOWAGE (BUILT IN CAGE)

DCES076

PERSONNEL PROTECTION EQUIPMENT (PPE) LOCKER
OPTIONAL: (3 OBAS/FFBAS)

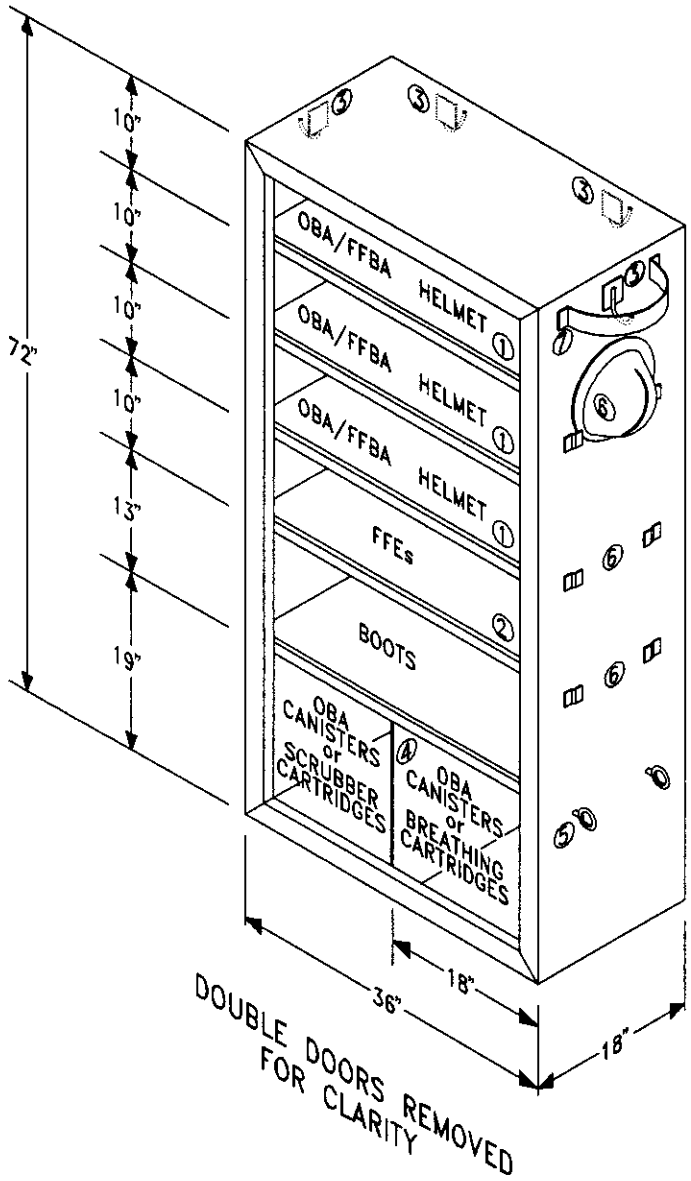

1. (OPTIONAL) ONE EACH READY SERVICE BREATHING CARTRIDGE AND CO_2 SCRUBBER
2. (OPTIONAL) STOWAGE COVERALLS/FFE SUITS
3. (OPTIONAL) HANGER HOOK TO HANG FFE SUIT OR BUTTERFLY CLIPS FOR HELMETS [1 SQFT PER HELMET]
4. REMOVABLE PARTITION
5. BUNGI CORD EYE HOOK TO SECURE FFE SUIT
6. FF HELMET
7. EYE PROTECTION SHIELD

PPE LOCKER

3 – FFE
3 – OBA/FFBA
36 – OBA CANISTERS
or
18 – BREATHING CARTRIDGES (6/FFBA)
18 – SCRUBBER CARTRIDGES (6/FFBA)

SHELVES ARRANGED AS SHOWN.
ALL OTHER REQUIREMENTS OF
DWG 803-54824286.
ASSEMBLY 104 APPLY.

DAMAGE CONTROL EQUIPMENT STOWAGE SKETCH # 077

PERSONNEL PROTECTION EQUIPMENT STOWAGE (3 FFE) VERSION 1

DCES077

PERSONNEL PROTECTION EQUIPMENT (PPE) LOCKER

OPTIONAL: (4 OBAS/FFBAS)

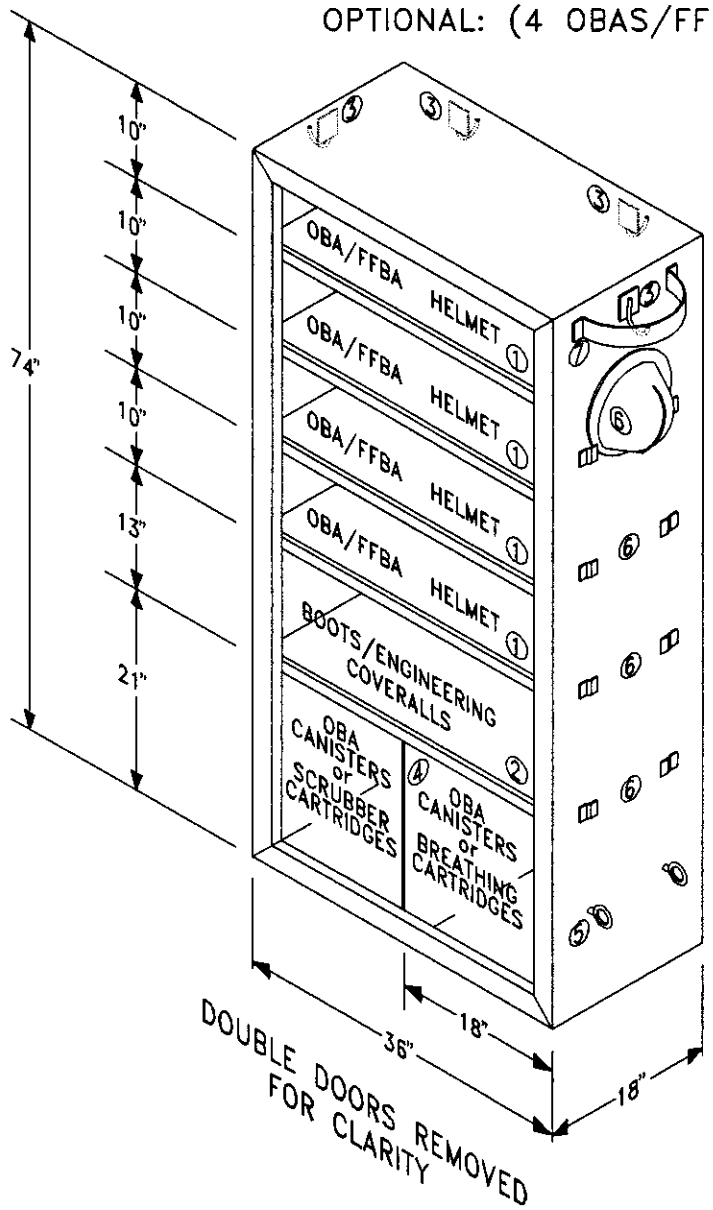

1. (OPTIONAL) ONE EACH READY SERVICE BREATHING CARTRIDGE AND CO_2 SCRUBBER
2. (OPTIONAL) STOWAGE COVERALLS/FFE SUITS
3. (OPTIONAL) HANGER HOOK TO HANG FFE SUIT OR BUTTERFLY CLIPS FOR HELMETS [1 SQFT PER HELMET]
4. REMOVABLE PARTITION
5. BUNGI CORD EYE HOOK TO SECURE FFE SUIT
6. FF HELMET
7. EYE PROTECTION SHIELD

PPE LOCKER

4 – OBA/FFBA
4 – PAIR BOOTS
4 – SETS COVERALLS
4 – FIREFIGHTING HELMETS
36 – OBA CANISTERS
or
24 – BREATHING CARTRIDGES (6/FFBA)
24 – SCRUBBER CARTRIDGES (6/FFBA)

SHELVES ARRANGED AS SHOWN.
ALL OTHER REQUIREMENTS OF
DWG 803-54824286.
ASSEMBLY 104 APPLY.

DAMAGE CONTROL EQUIPMENT STOWAGE SKETCH # 078

PERSONNEL PROTECTION EQUIPMENT STOWAGE (4 FFE) VERSION 2

DCES078

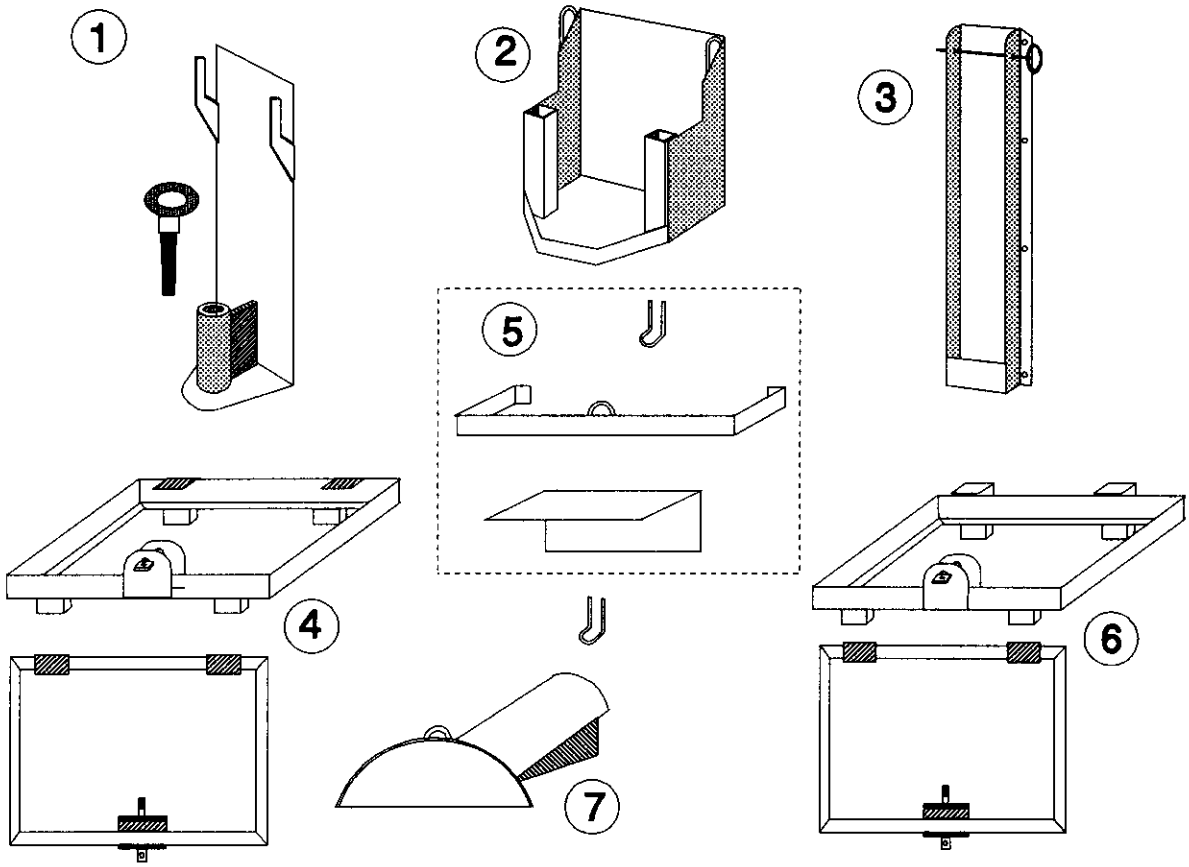

Bracket Description	Manufacturer	Dimensions
1. Model 150/Omni	For Hurst Tool	17¾"H x 5½"W x 5"D
2. Model 27 Bracket	For Hurst Tool	31"H x 13½"W x 7¼"D
3. Model 30 Ram	For Hurst Tool	24"H x 5½"W x 3¾"D
4. Engine Mounting Bracket -	Ship's Force	2½"H x 20"W x 20"D
5. Attachment Case Bracket - - Wrap around bracket - Support bracket - Tie down hook	Ship's Force	 1"H x 16"W x 4"D 2"H x 4"W x 4"D
6. Hose Reel Bracket -	Ship's Force	2½"H x 16½"W x 16½"D
7. Hose Bracket -	Ship's Force	10"H x 14"W x 12"D

DAMAGE CONTROL EQUIPMENT STOWAGE SKETCH #079

PHARS STOWAGE BRACKETS

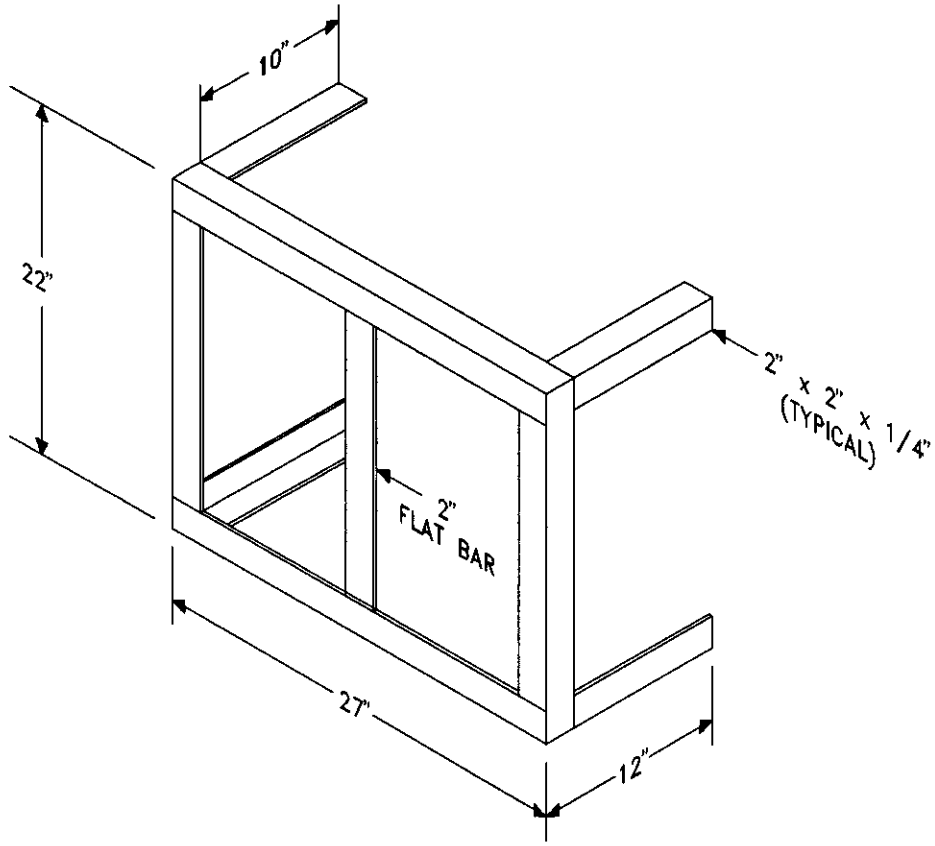

PLATE PATCH STOWAGE
(BHD MOUNTED)

DAMAGE CONTROL EQUIPMENT STOWAGE SKETCH # 080

PLATE PATCH STOWAGE RACK

DCES080

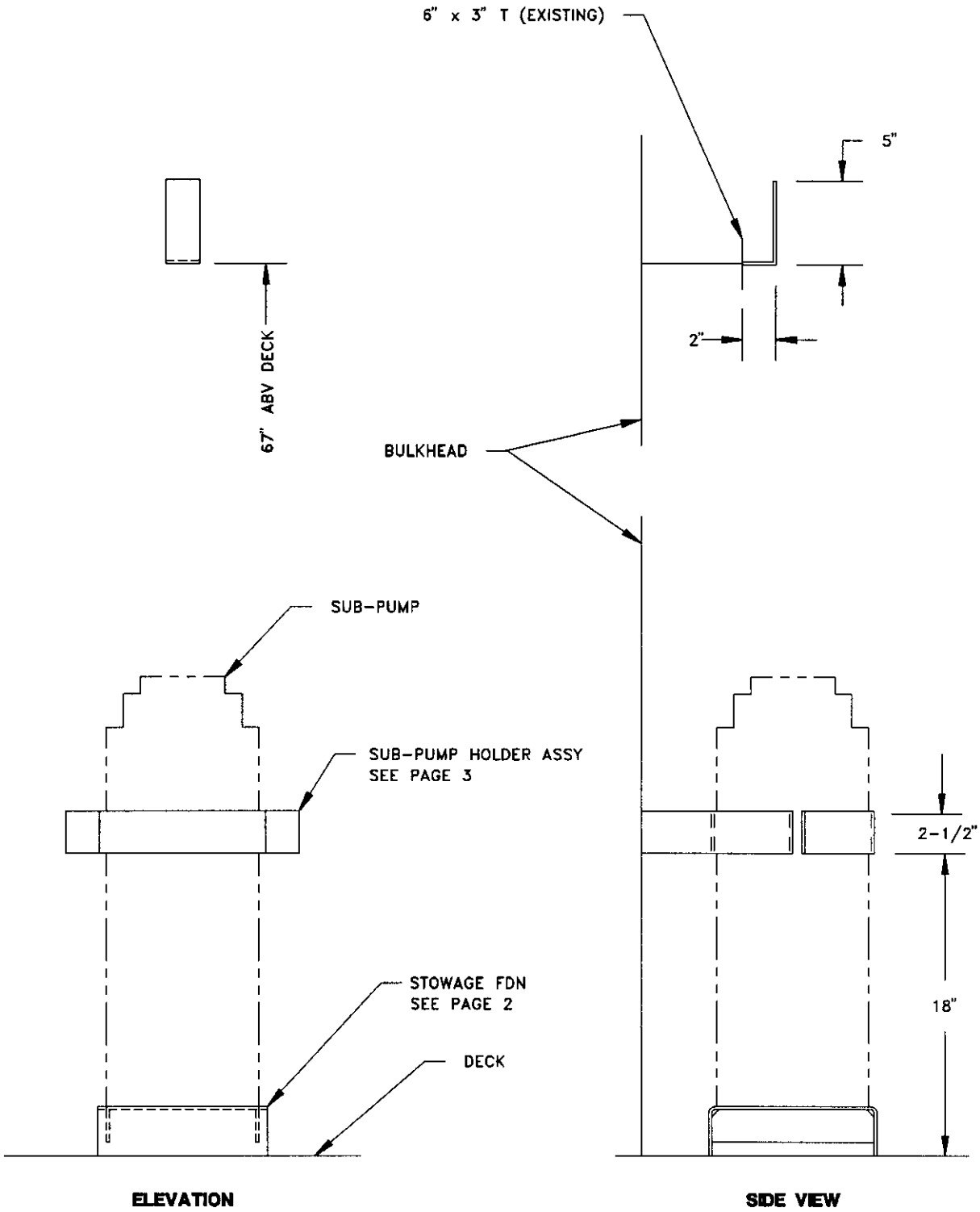

DAMAGE CONTROL EQUIPMENT STOWAGE SKETCH # 081

PORTABLE SUB-PUMP STOWAGE
(PAGE 1 OF 3)

DCE5081A

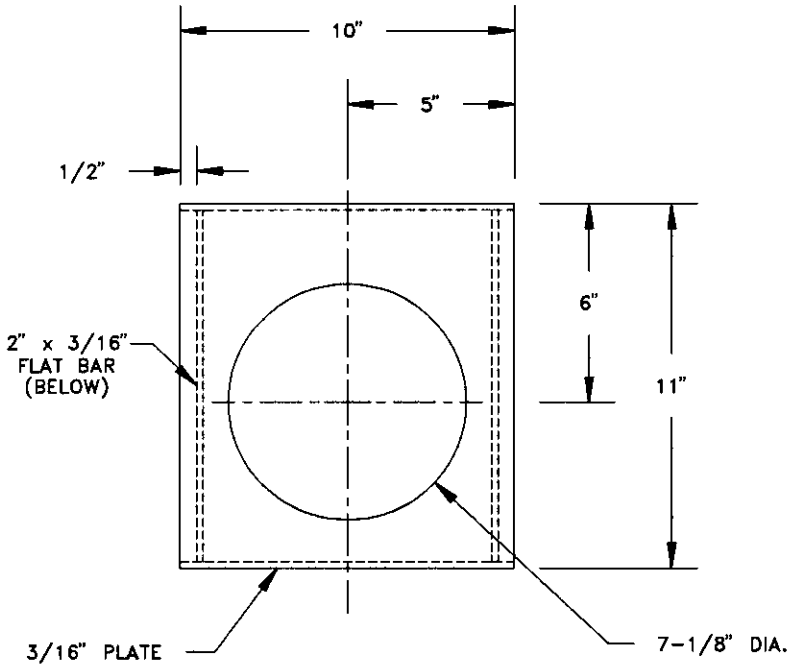

PLAN

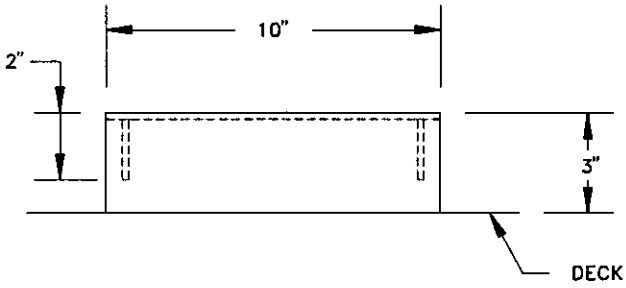

ELEVATION

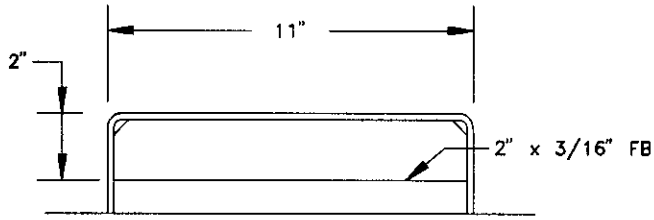

SIDE VIEW

DAMAGE CONTROL EQUIPMENT STOWAGE SKETCH # 081

PORTABLE SUB-PUMP (FOUNDATION) STOWAGE
(PAGE 2 OF 3)

OCES081B

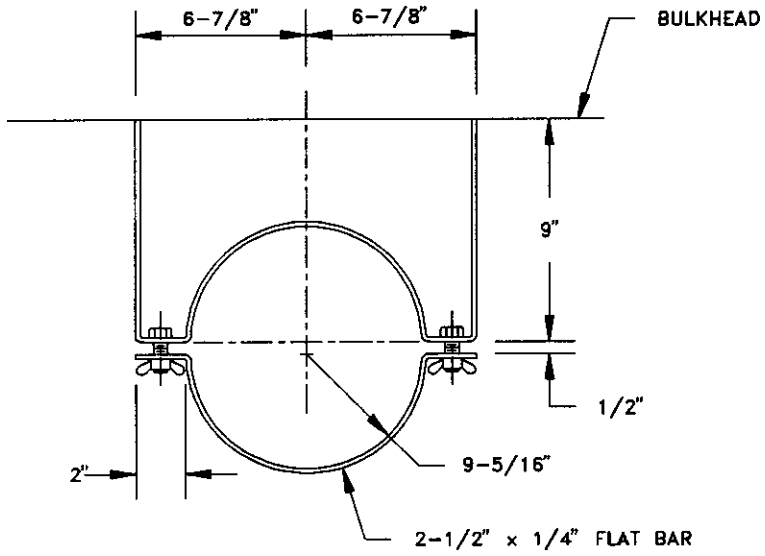

PLAN

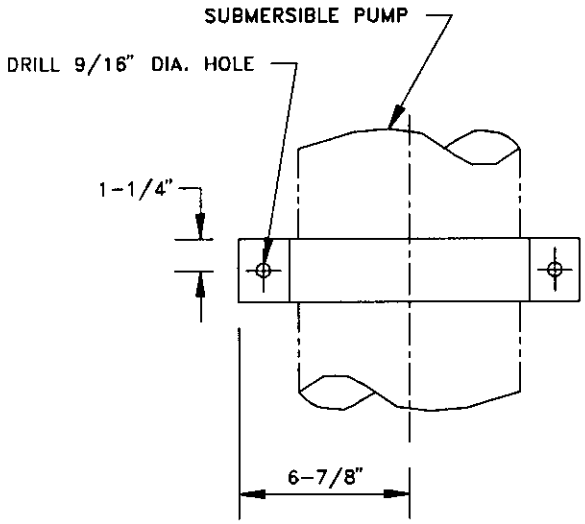

ELEVATION

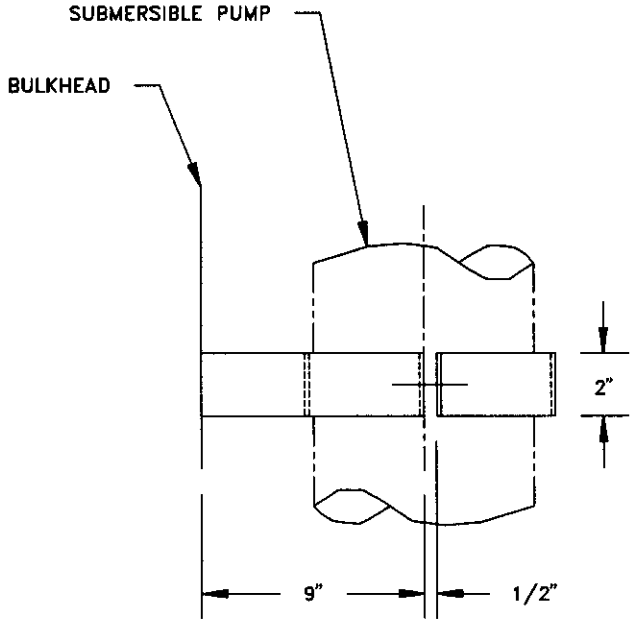

PLAN

DAMAGE CONTROL EQUIPMENT STOWAGE SKETCH # 081

PORTABLE SUB-PUMP (HOLDER ASSEMBLY) STOWAGE (PAGE 3 OF 3)

DCES081C

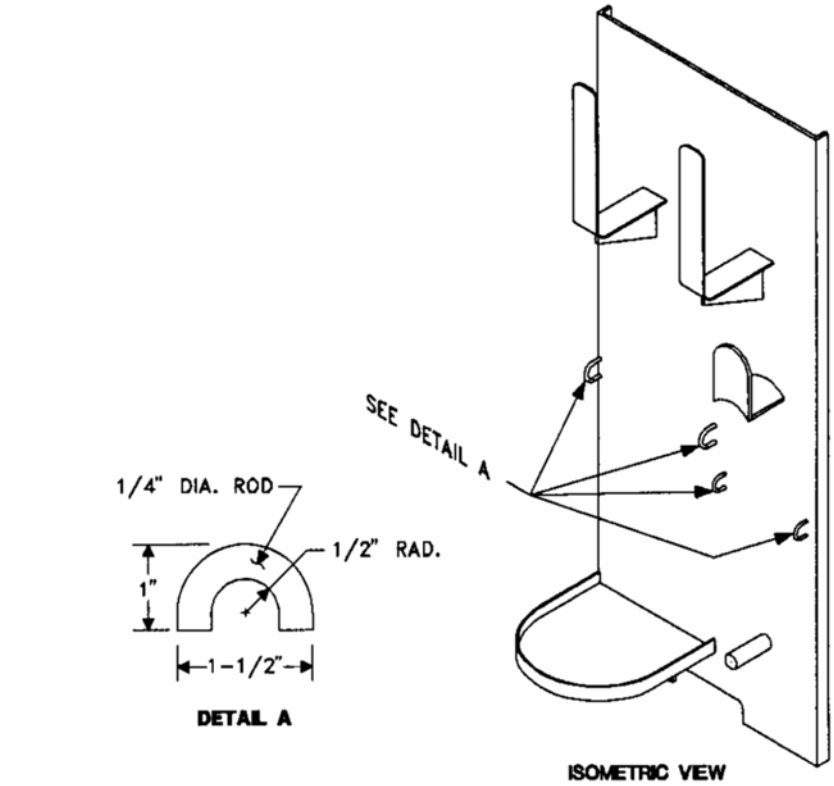

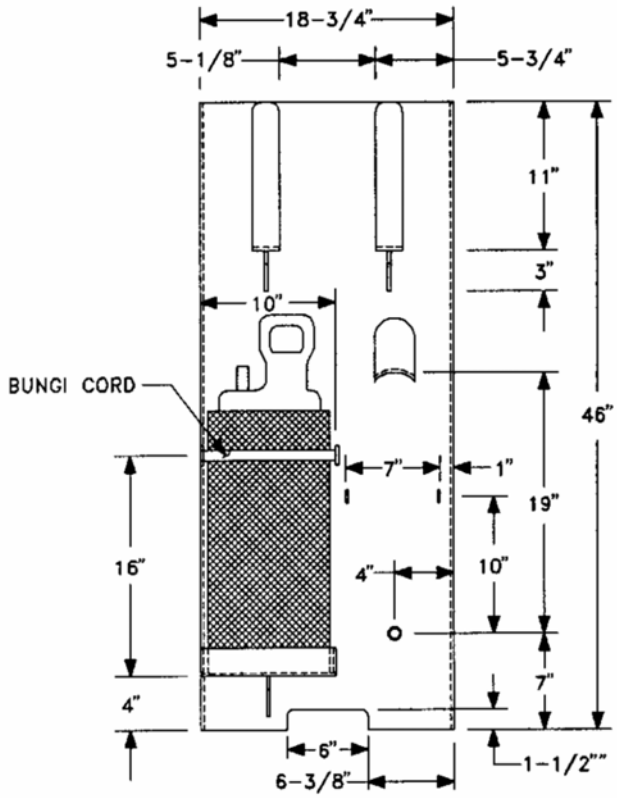

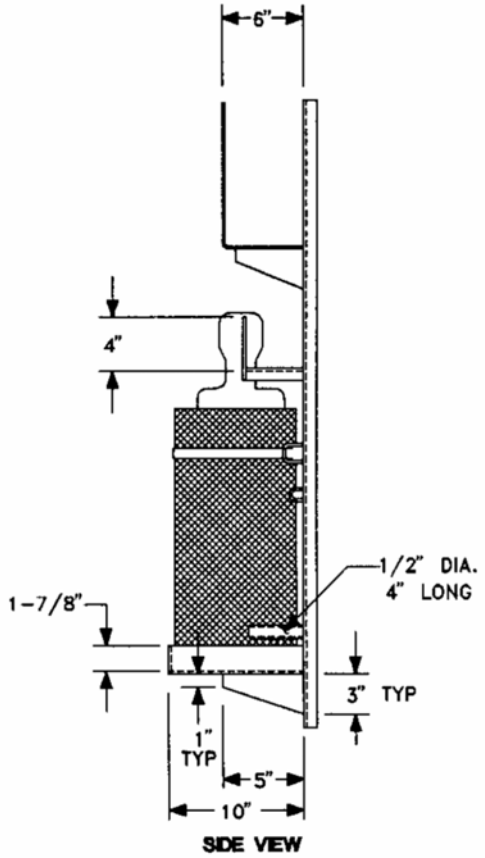

DAMAGE CONTROL EQUIPMENT STOWAGE SKETCH #081A

PORTABLE SUB-PUMP STOWAGE
SINGLE UNIT

DCES081D

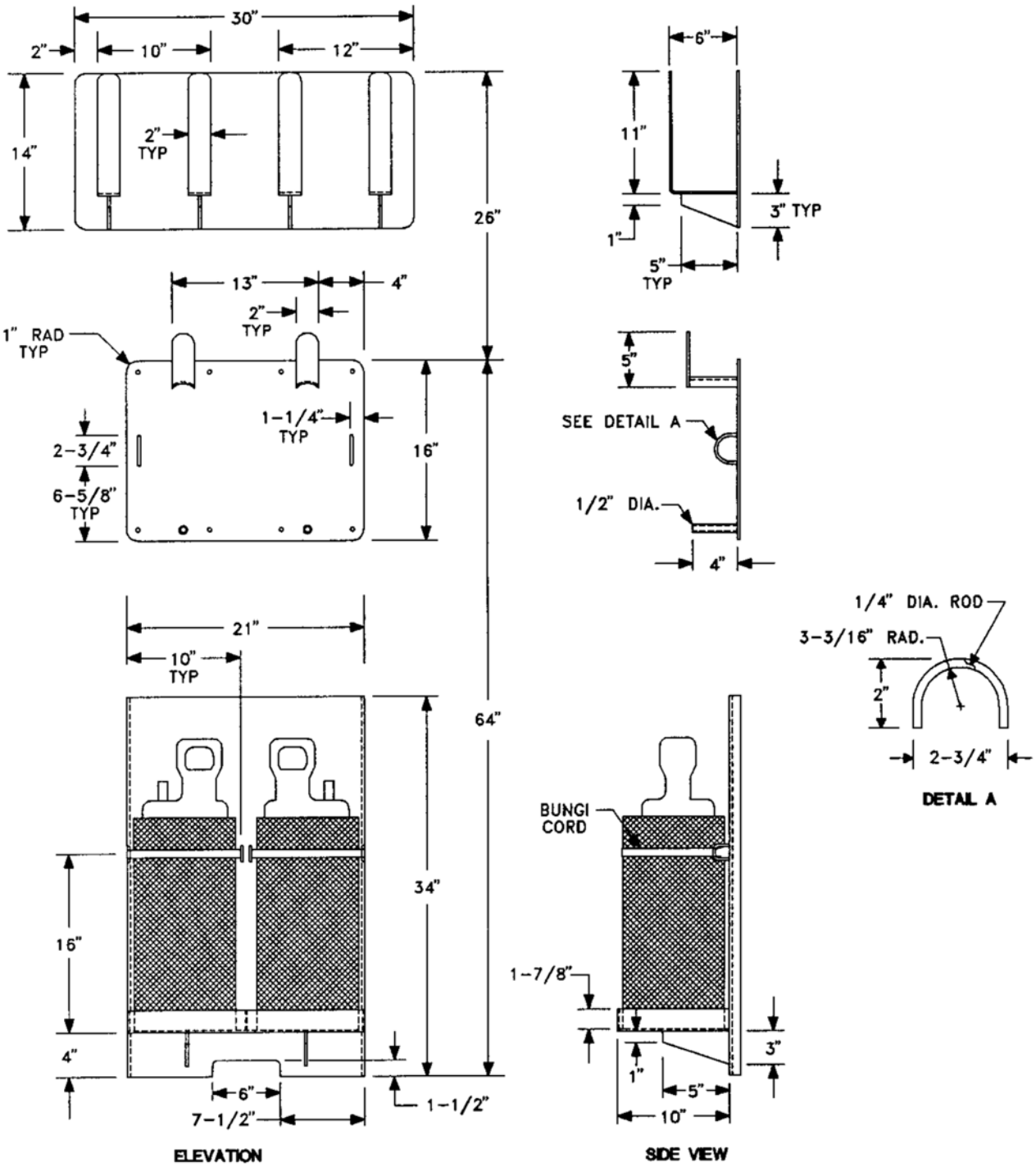

DAMAGE CONTROL EQUIPMENT STOWAGE SKETCH #081B

PORTABLE SUB-PUMP STOWAGE DOUBLE UNIT

DCES081C

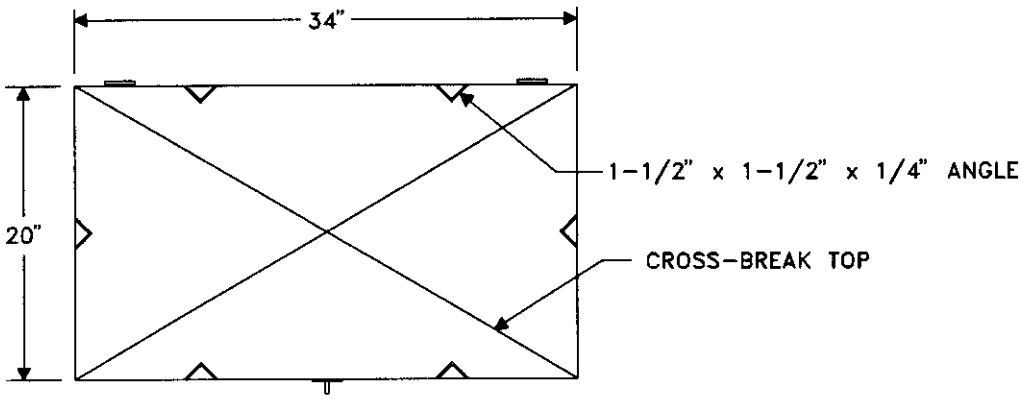

PLAN

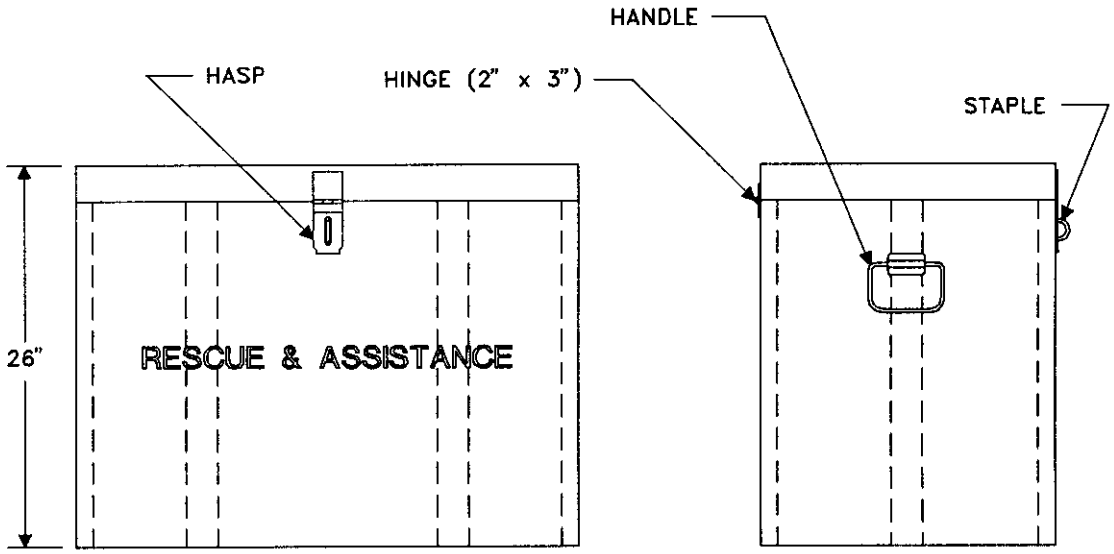

ELEVATION **SIDE VIEW**

NOTES:

1. CHEST TO BE FABRICATED TO MEET WATERTIGHT INTEGRITY.
2. THIS CHEST IS TO BE PAINTED STRIPPING ENAMEL RED COLOR NO. 11105 FED STD 595 MIL-SPEC TT-E-489.
3. "RESCUE & ASSISTANCE" TO BE STENCILED 1-1/2" LETTERS WITH WHITE PAINT.

DAMAGE CONTROL EQUIPMENT STOWAGE SKETCH # 082

RESCUE AND ASSISTANCE CHEST

DCES082

(A) 60" x 3" x 3" x 1/2" ANGLE

(B) 32" x 3" x 1/2" FLAT STOCK
(DRILL 13/32" DIA ON ENDS)

(C) 1/2" x 3/8" BOLTS WITH WING NUTS

(D) 38" x 3" x 1/4" FLAT STOCK

(E) 2" x 4-3/4" x 1/4" CLIPS FOR SUPPORT

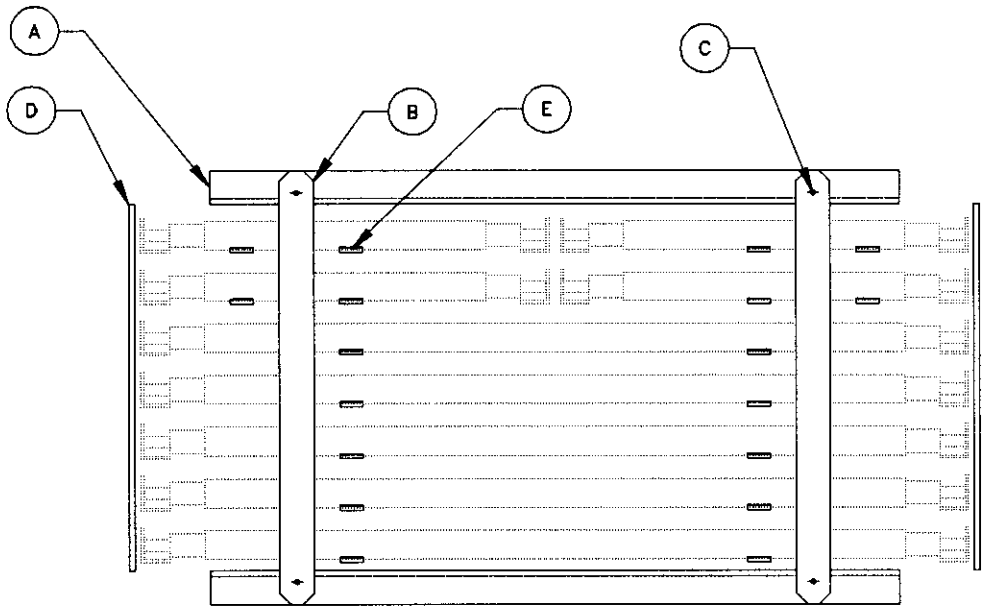

DAMAGE CONTROL EQUIPMENT STOWAGE SKETCH # 083

SHORING METAL STOWAGE RACK (HORIZONTAL)
VERSION 1

DCES083

(A) 47-1/2" x 3" x 3" x 1/2" ANGLE

(B) 35" x 3" x 1/2" FLAT STOCK
(DRILL 13/32" DIA ON ENDS)

(C) 1/2" x 3/8" BOLTS WITH WING NUTS

(D) 15" x 3" x 1/4" FLAT STOCK

(E) 2" x 4-3/4" x 1/4" CLIPS FOR SUPPORT

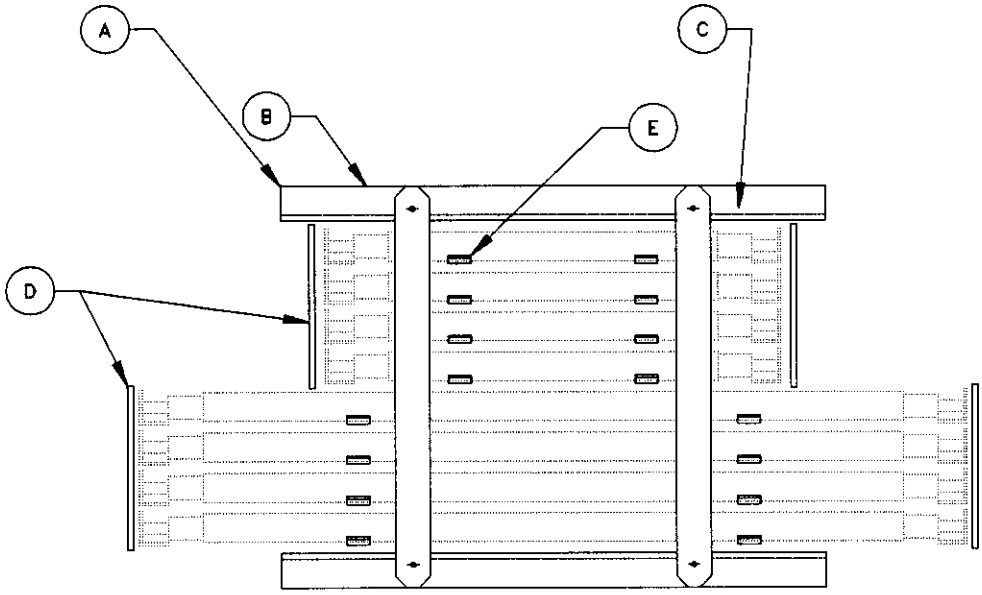

DAMAGE CONTROL EQUIPMENT STOWAGE SKETCH # 084

SHORING METAL STOWAGE RACK (HORIZONTAL) VERSION 2

DCES084

(A) ROUND BAR, 3/8" DIA., 6" LONG STEEL, 8 EACH.

(B) PLATE, 1/4" x 12" x 12" WITH 3" RAD CORNER, STEEL 2 EACH.

(C) PLATE, 1/4" x 10" x 5" STEEL, 2 EACH.

(D) PLATE, 1/4" x 5' x 8" STEEL, 4 EACH.

(E) PLATE, 1/4" x 3" x 5" STEEL, 2 EACH.

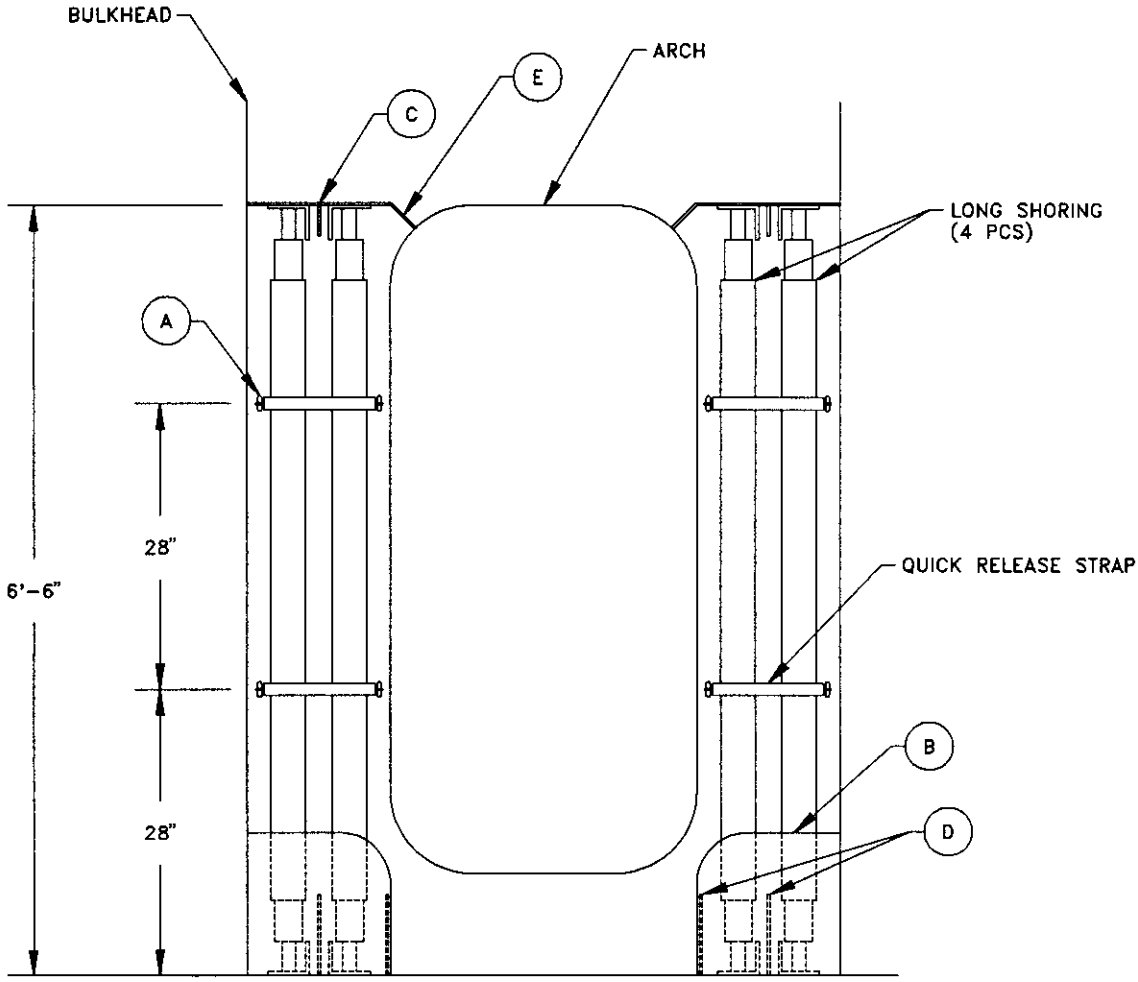

DAMAGE CONTROL EQUIPMENT STOWAGE SKETCH # 085

SHORING METAL STOWAGE RACK (VERTICAL)
VERSION 3

DCES085

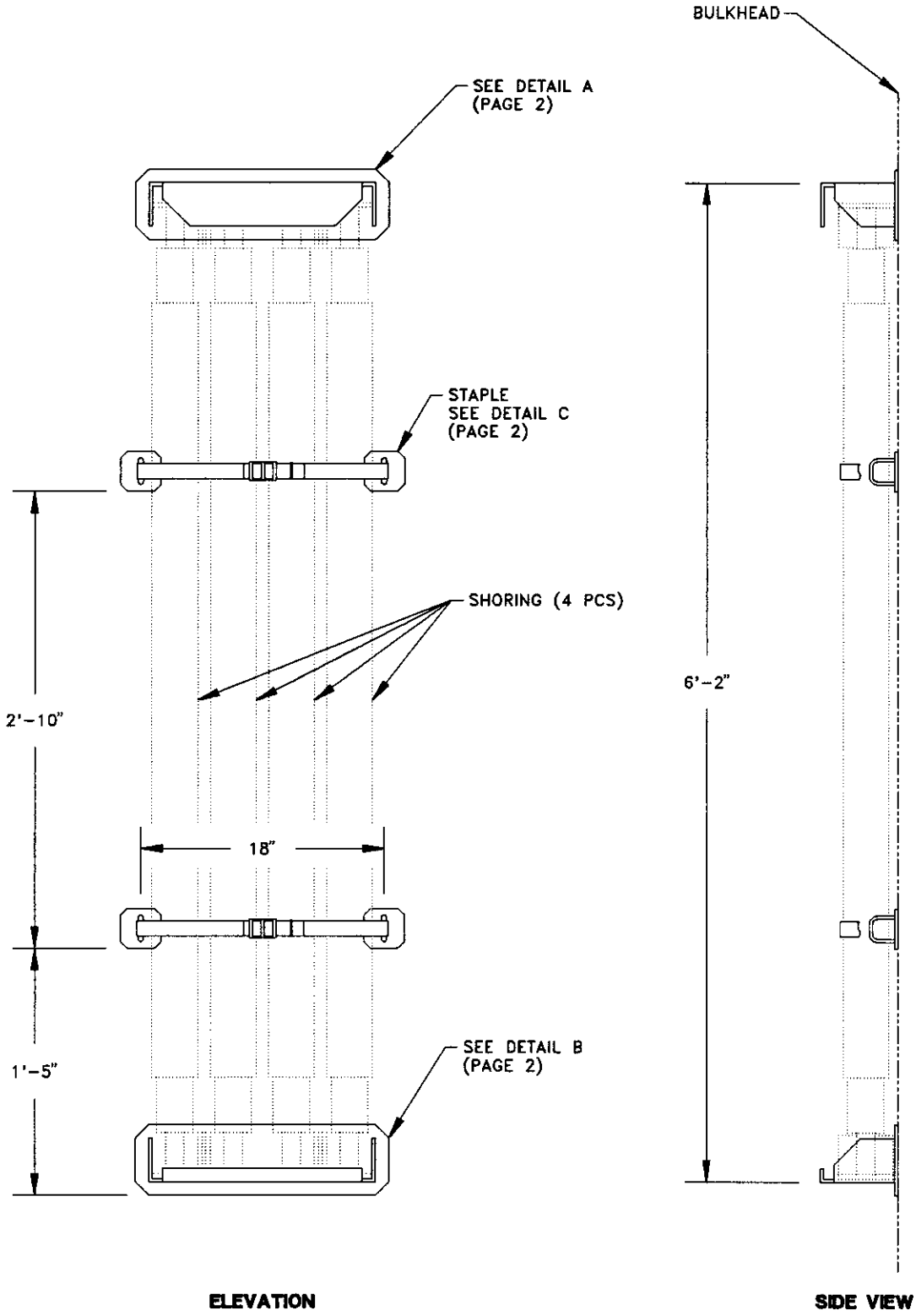

DAMAGE CONTROL EQUIPMENT STOWAGE SKETCH # 086

SHORING METAL STOWAGE RACK (VERTICAL)
VERSION 4 (PAGE 1 OF 2)

DCES086A

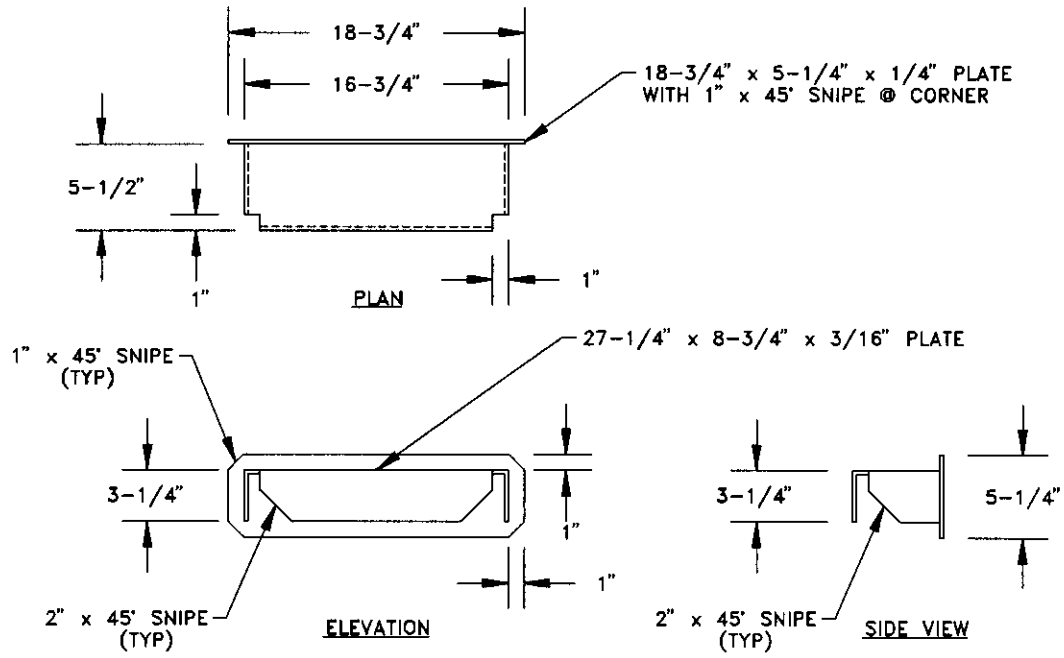

DETAIL A

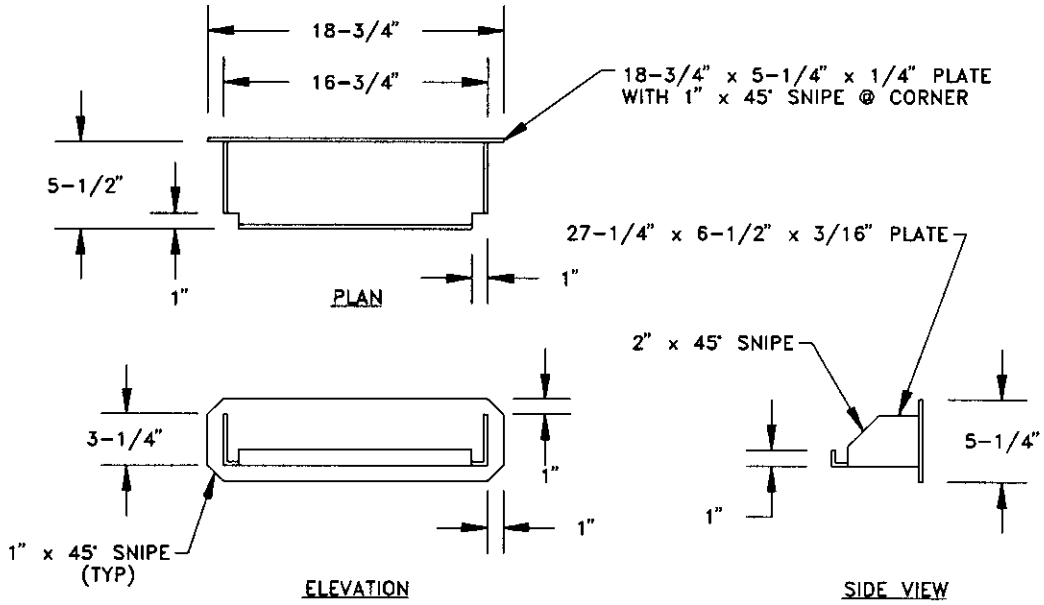

DETAIL B

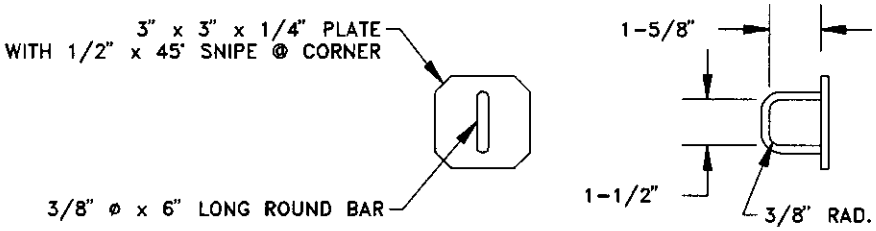

DETAIL C

DAMAGE CONTROL EQUIPMENT STOWAGE SKETCH # 086

SHORING METAL STOWAGE RACK (VERTICAL)
VERSION 4 (PAGE 2 OF 2)

DCES086B

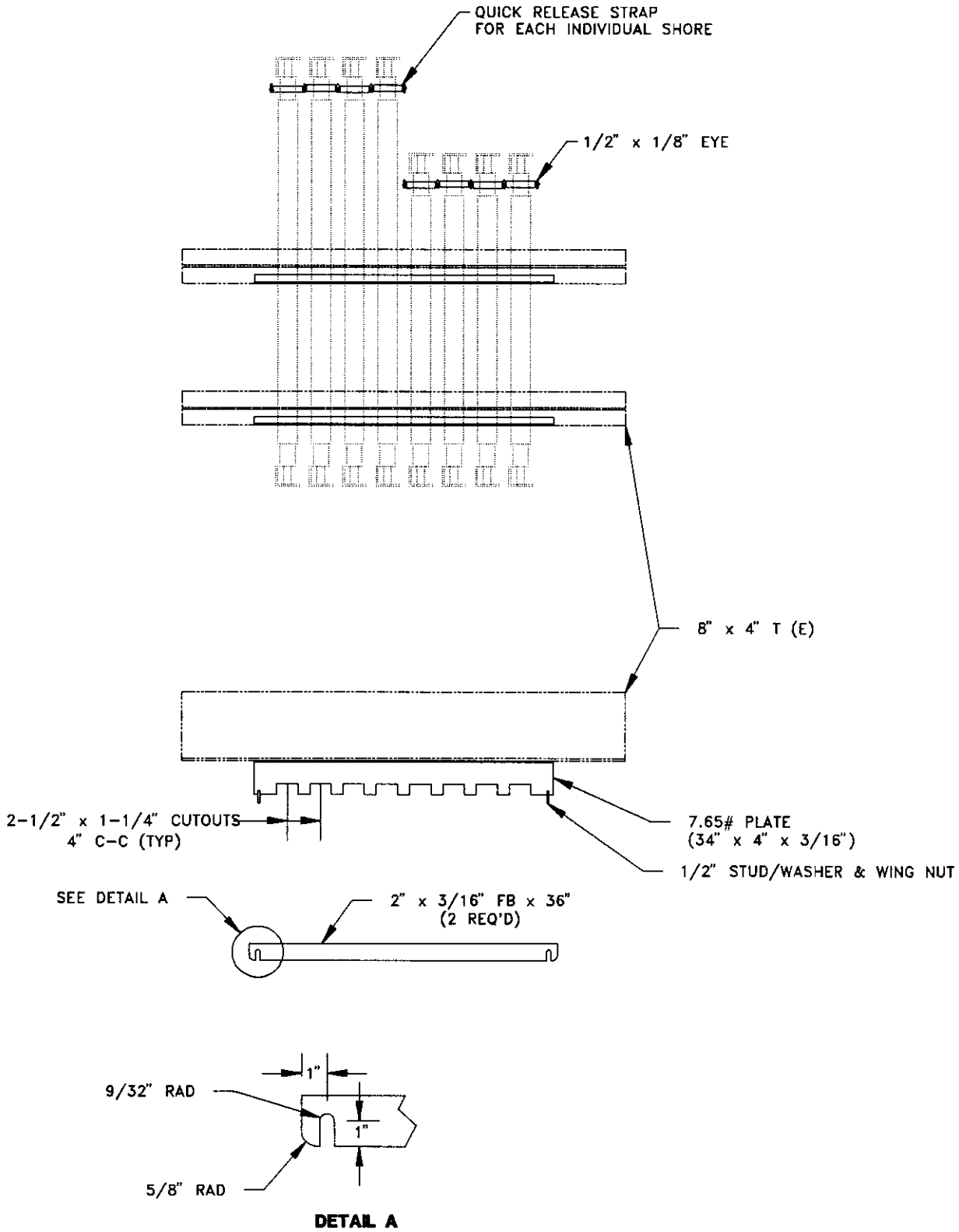

DAMAGE CONTROL EQUIPMENT STOWAGE SKETCH # 087

SHORING METAL STOWAGE RACK (VERTICAL)
VERSION 5

DCES087

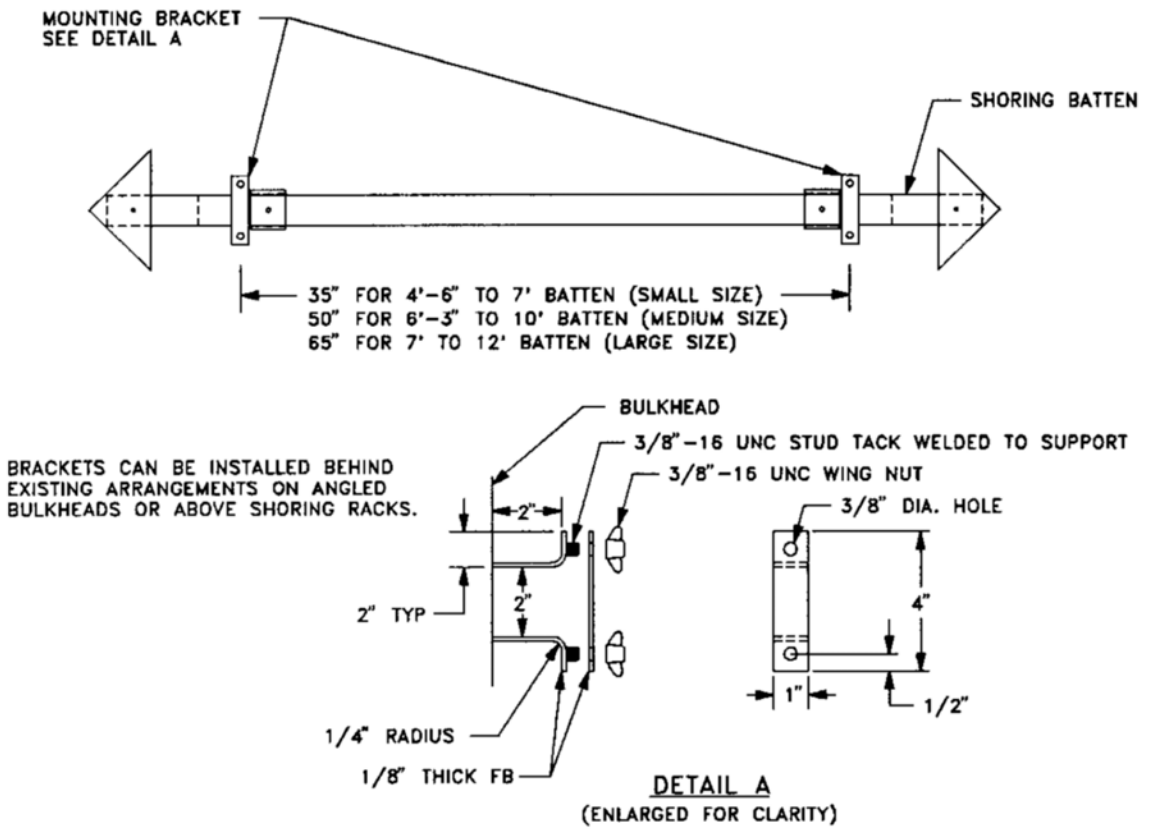

DAMAGE CONTROL EQUIPMENT STOWAGE SKETCH # 088

SHORING WOODEN, STOWAGE RACK (4 PCS) WITH SHORING BATTEN STOWAGE

DCES088

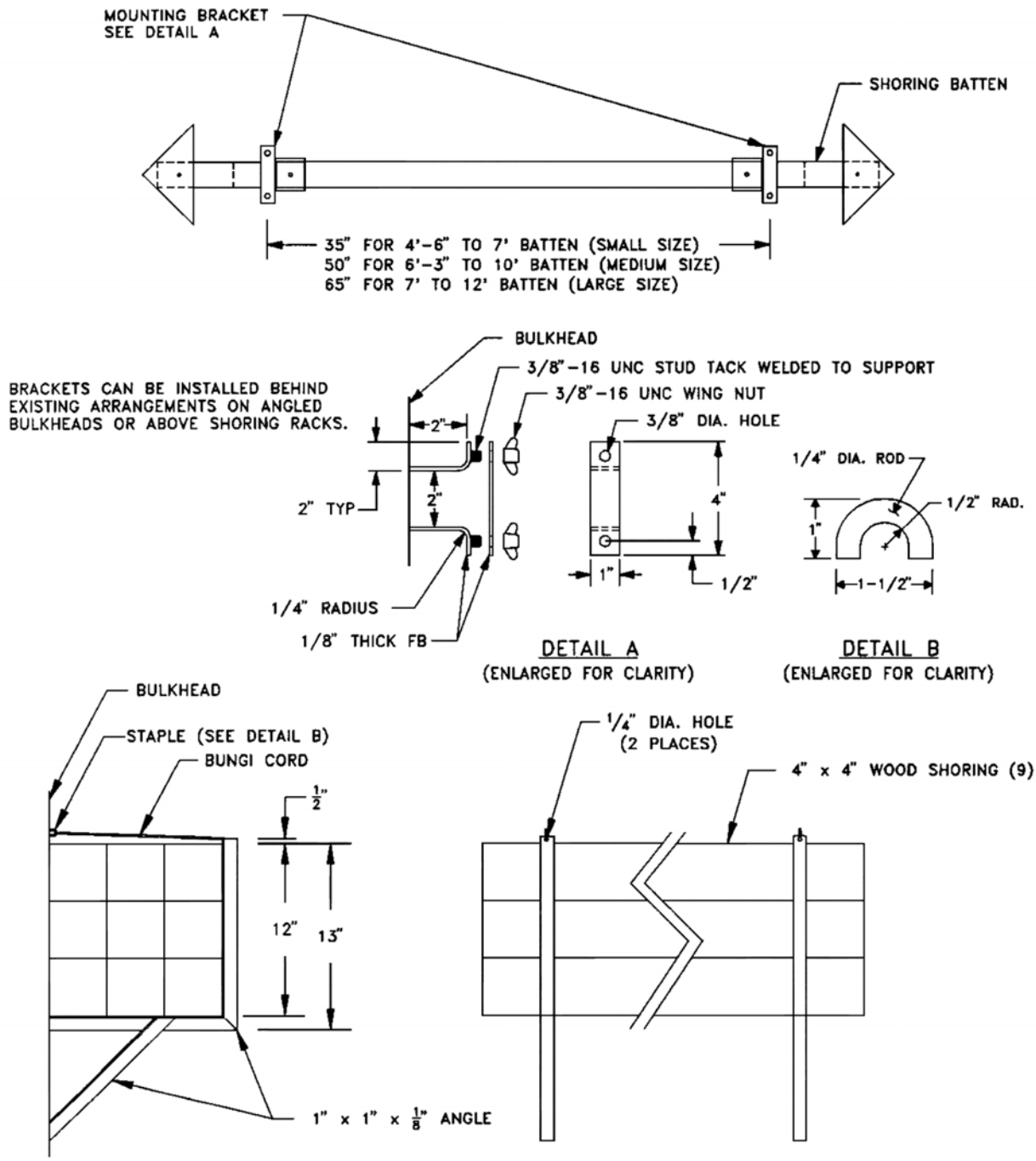

DAMAGE CONTROL EQUIPMENT STOWAGE SKETCH # 089

SHORING WOODEN, STOWAGE RACK (9 PCS) WITH SHORING BATTEN STOWAGE

DCES089

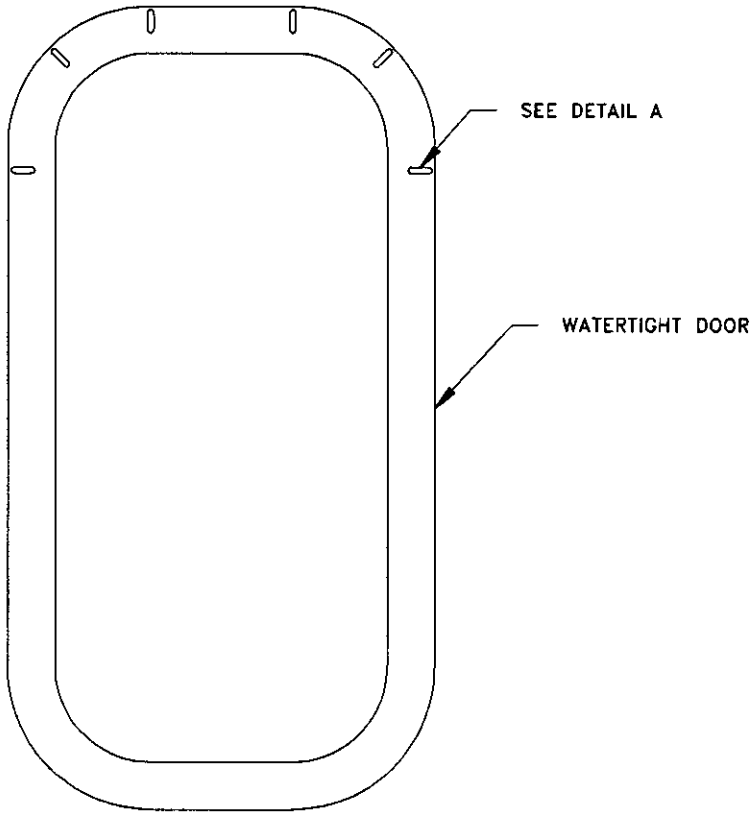

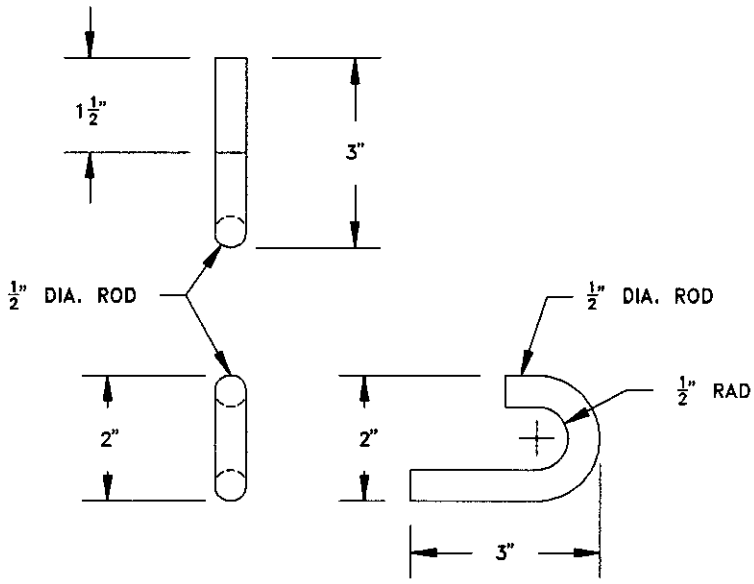

DETAIL A

DAMAGE CONTROL EQUIPMENT STOWAGE SKETCH # 090

SMOKE CURTAIN HOOKS

DCES090

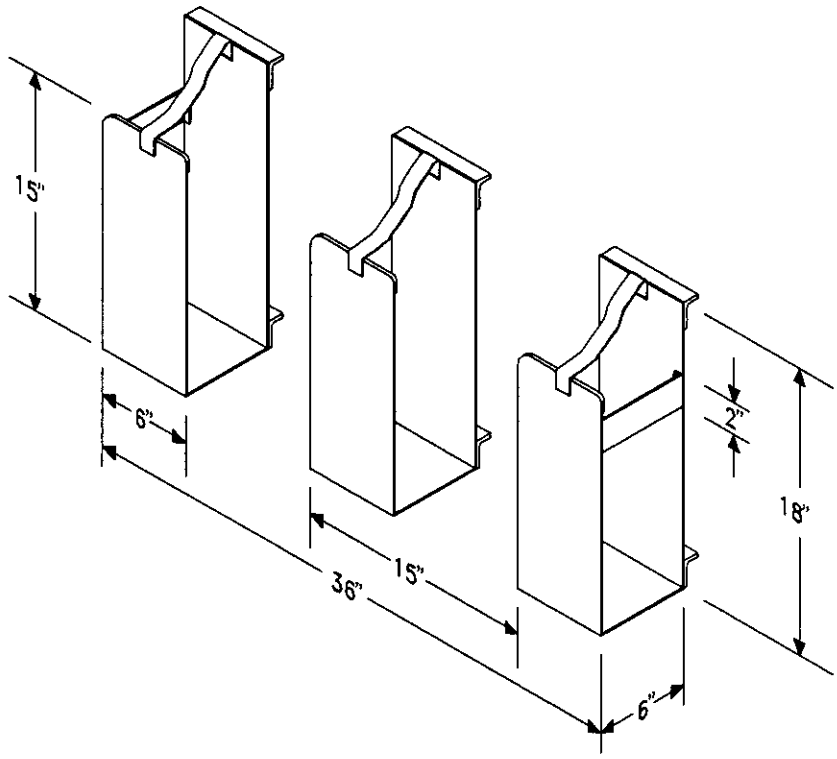

VERSION 1 (BHD MOUNTED)

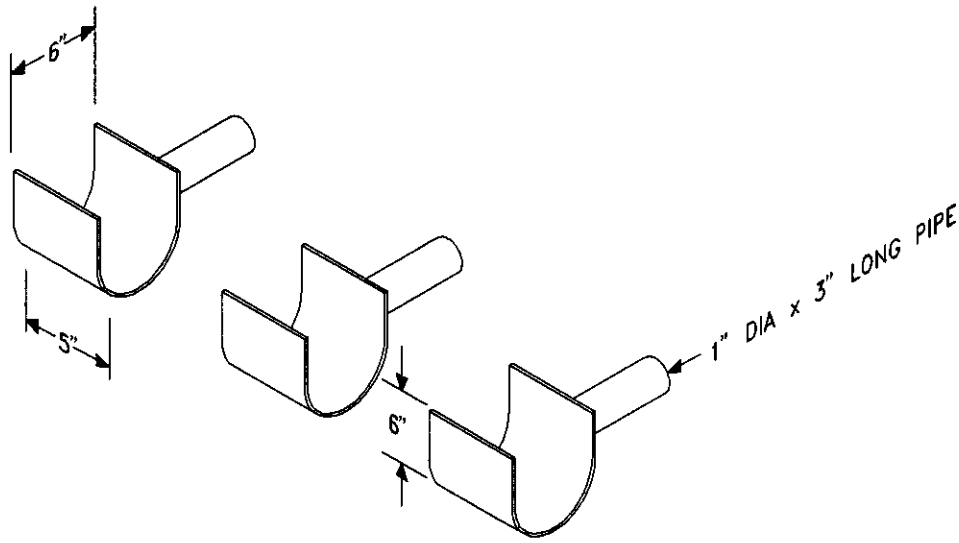

VERSION 2 (ABOVE DOOR MOUNTED)

DAMAGE CONTROL EQUIPMENT STOWAGE SKETCH # 091

SMOKE CURTAIN STOWAGE (BRACKET)

DCES091

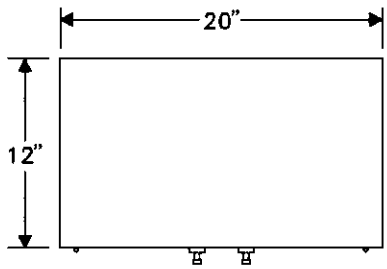

PLAN

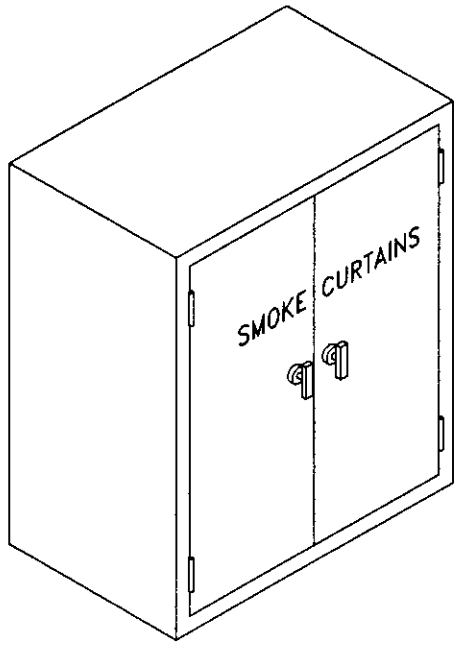

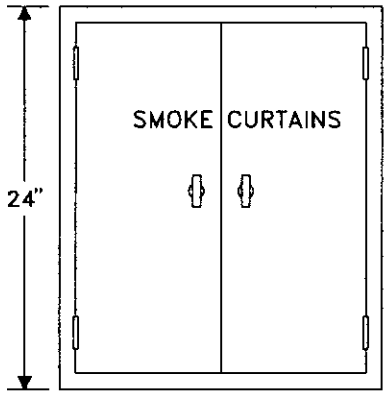

ELEVATION

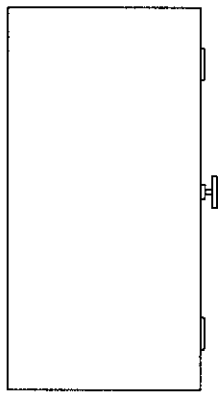

SIDE VIEW

NOTES:

1. MATERIALS:
   ALUMINUM – WHEN MADE IN ACCORDANCE WITH NAVSHIPS DWG # 805-1639424 & 3209-86189 (FOR GUIDE ONLY).
   STEEL – WHEN MADE IN ACCORDANCE WITH NAVSHIPS DWG # 805-4598127 (FOR GUIDE ONLY).
2. FINISH AS SPECIFIED.
3. ADJUSTABLE SHELVES TO HAVE 1" LIP QUAN. AS SPECIFIED.
4. STENCIL 2" LETTERS, BLACK, "SMOKE CURTAINS".
5. JAMESTOWN METAL MARINE SK 207-1-2-N.

DAMAGE CONTROL EQUIPMENT STOWAGE SKETCH # 092

SMOKE CURTAIN STOWAGE (LOCKER)

DCES092

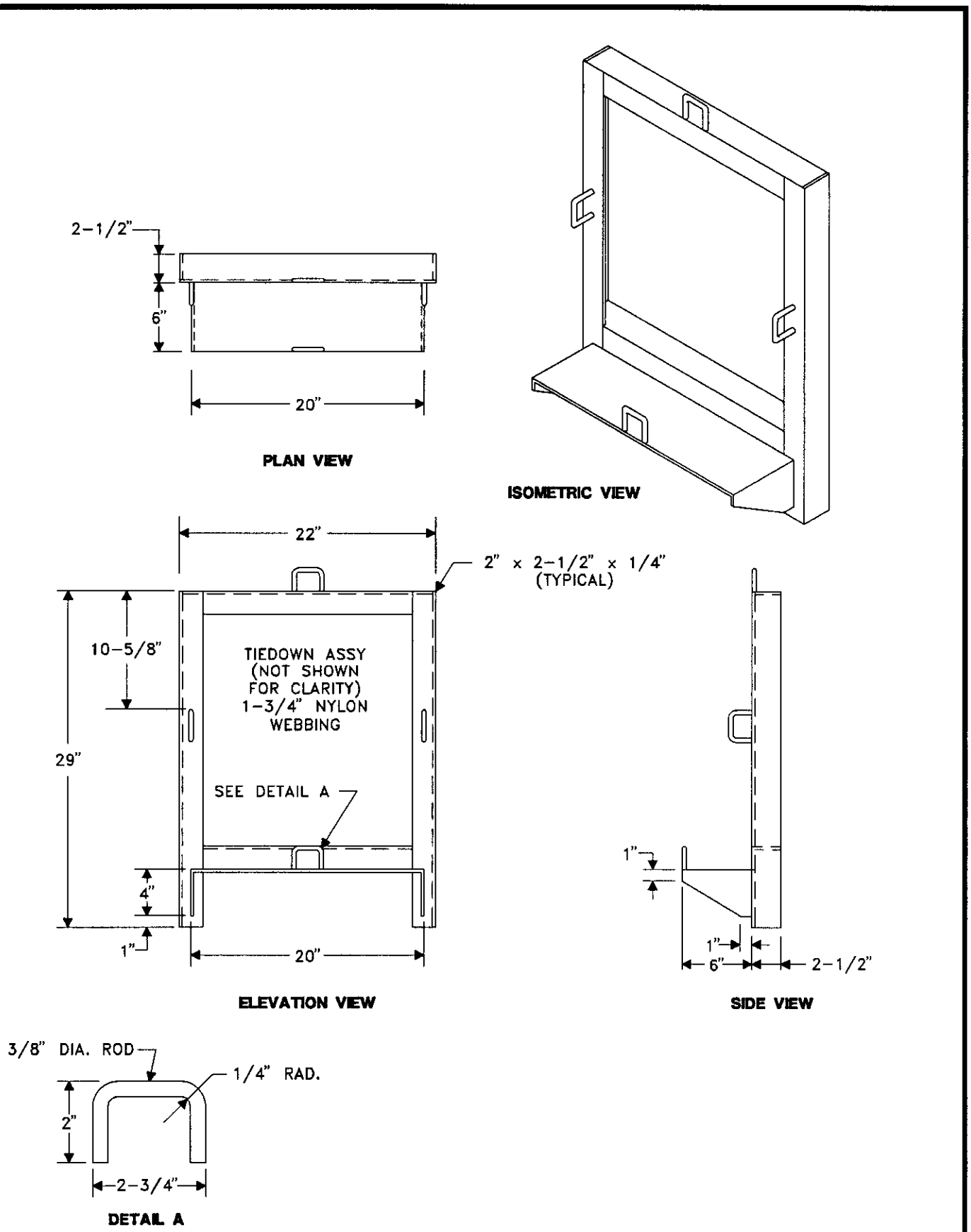

DAMAGE CONTROL EQUIPMENT STOWAGE SKETCH # 093

SMOKE GENERATOR STOWAGE RACK

DCES093

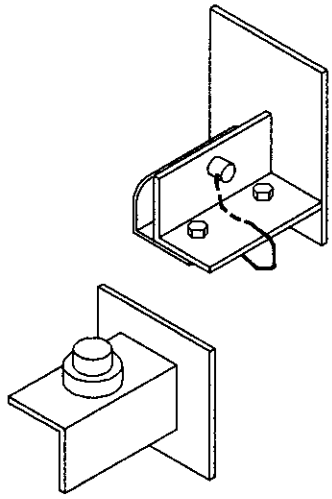

ISOMETRIC VIEW

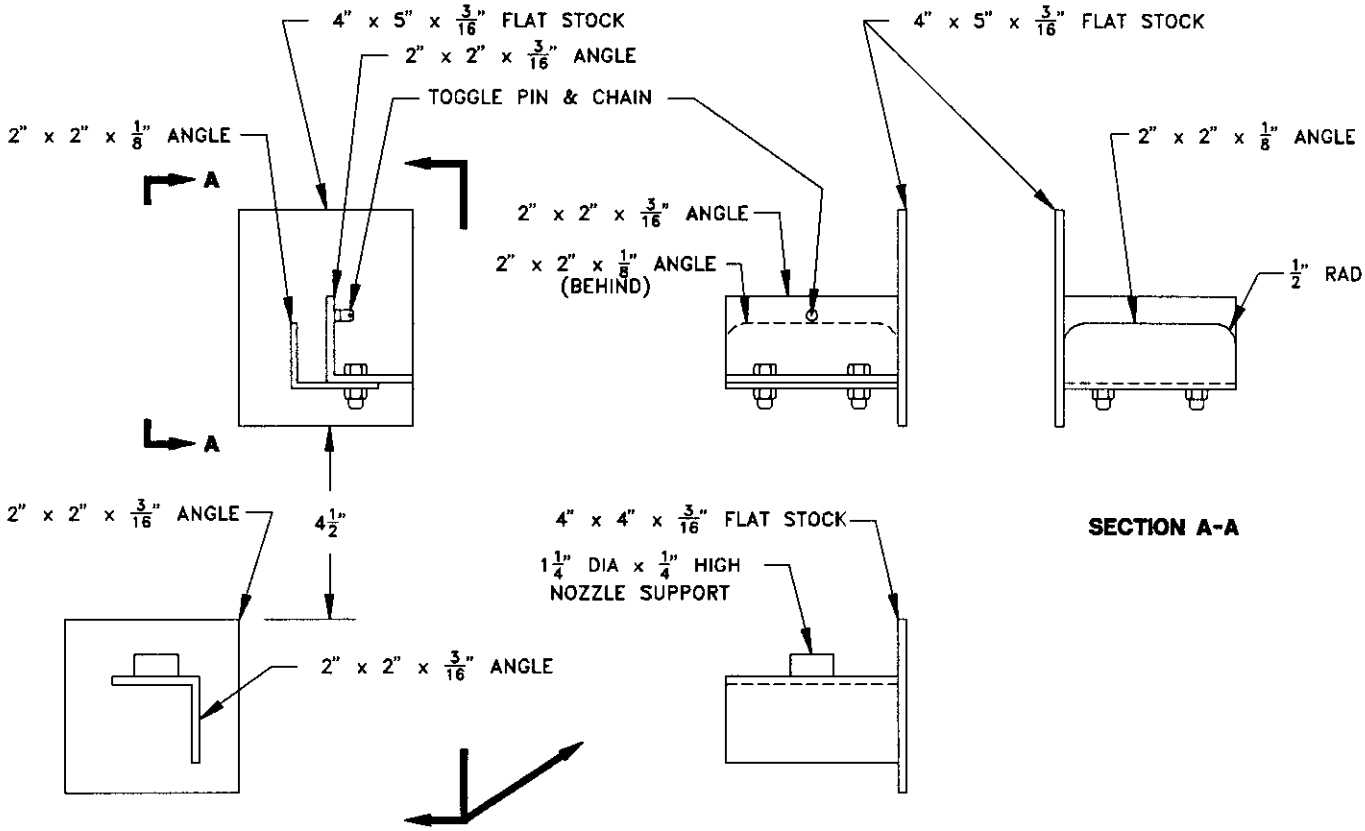

DAMAGE CONTROL EQUIPMENT STOWAGE SKETCH # 094

VARI-NOZZEL STOWAGE HOLDER, 1-1/2" AND 2-1/2"

DCES094

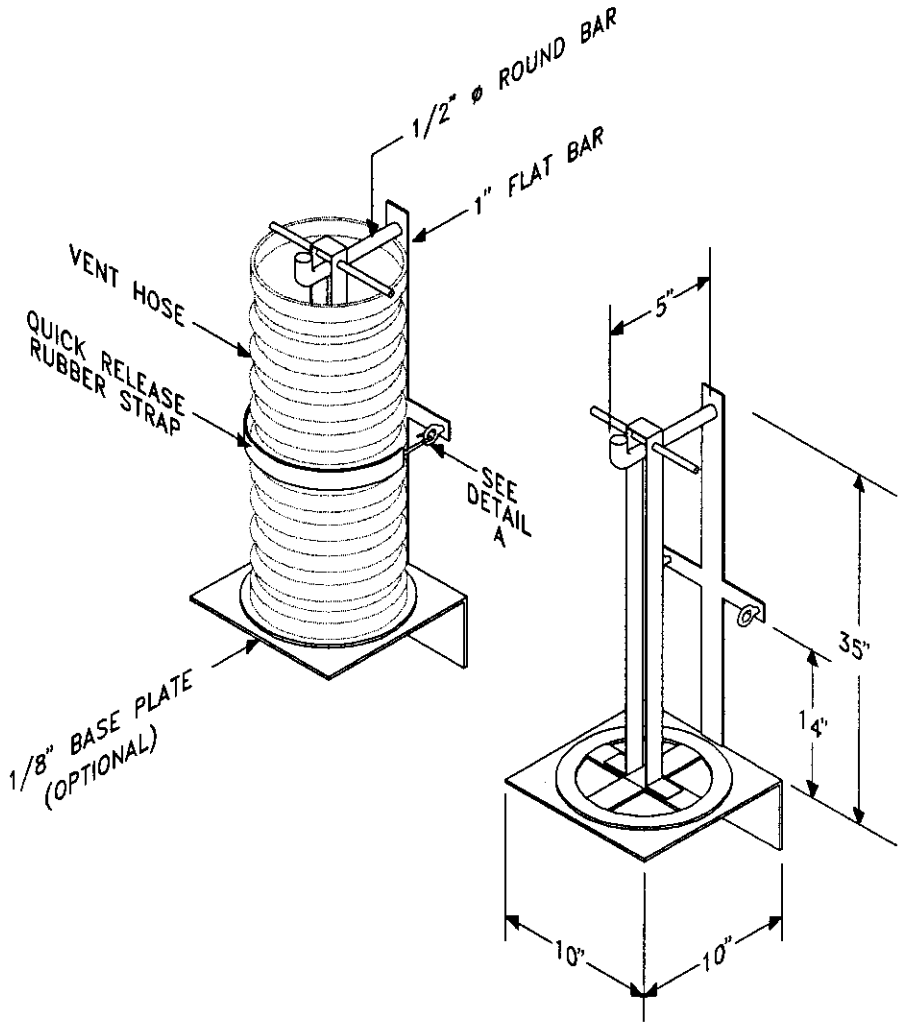

VENT HOSE STOWAGE (BHD MOUNTED)

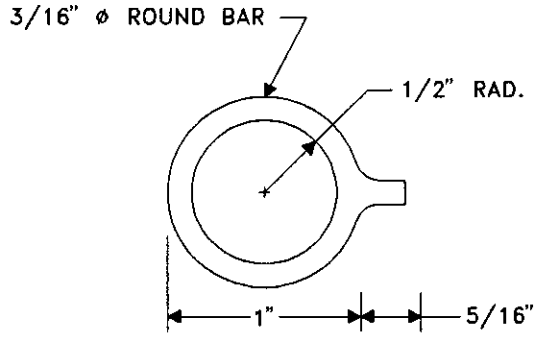

DETAIL A

DAMAGE CONTROL EQUIPMENT STOWAGE SKETCH # 095

VENT HOSE STOWAGE, BHD MOUNTED (VERTICAL)
VERSION 1

DCES095

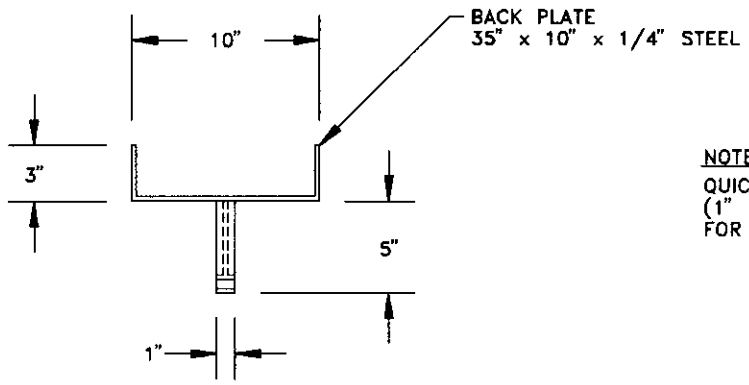

PLAN

NOTE:
QUICK RELEASE RUBBER STRAP (1" x 1/4"), IS NOT SHOWN FOR CLARITY.

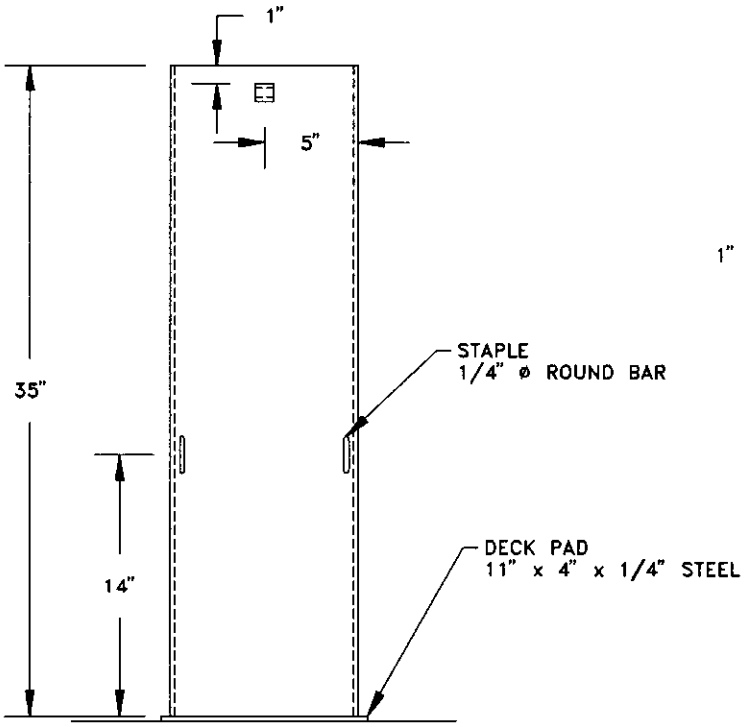

ELEVATION

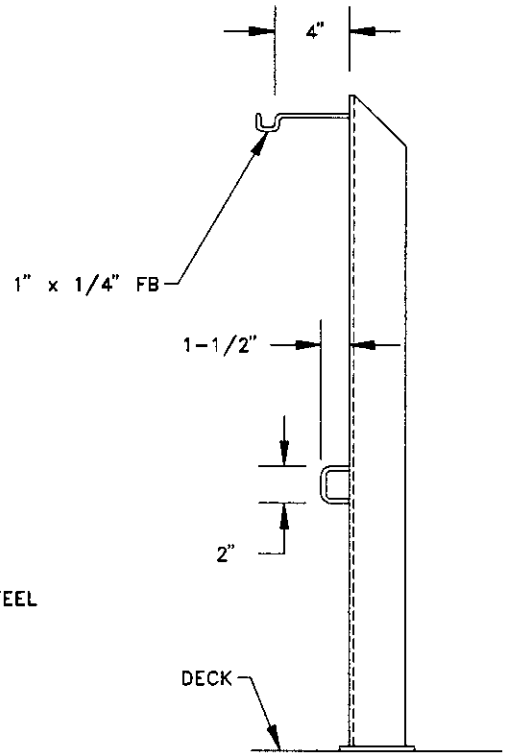

SIDE VIEW

8" VENT DUCT STOWAGE
(SINGLE STOWAGE SHOWN)

DOUBLE STOWAGE IS SIMILAR, EXCEPT
2X WIDTH, WITH 2 HOOKS, CENTER GUSSET
AND ONE QUICK RELEASE STRAP

DAMAGE CONTROL EQUIPMENT STOWAGE SKETCH # 096

VENT HOSE STOWAGE (VERTICAL)
VERSION 2

DCES096

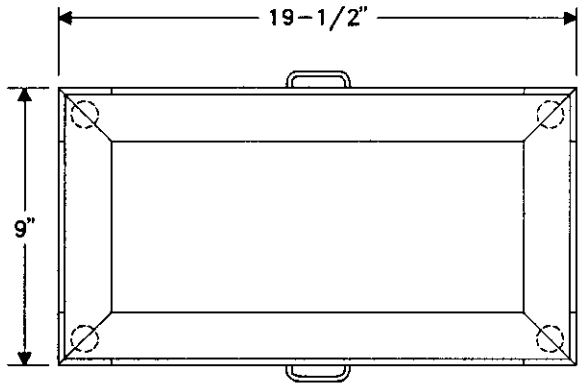

PLAN

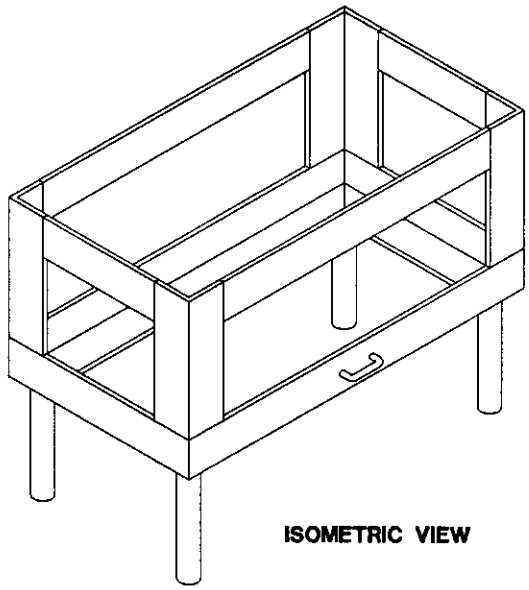

ISOMETRIC VIEW

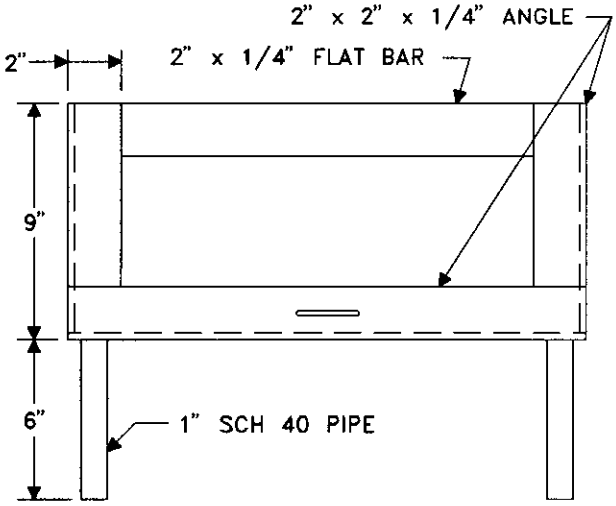

ELEVATION

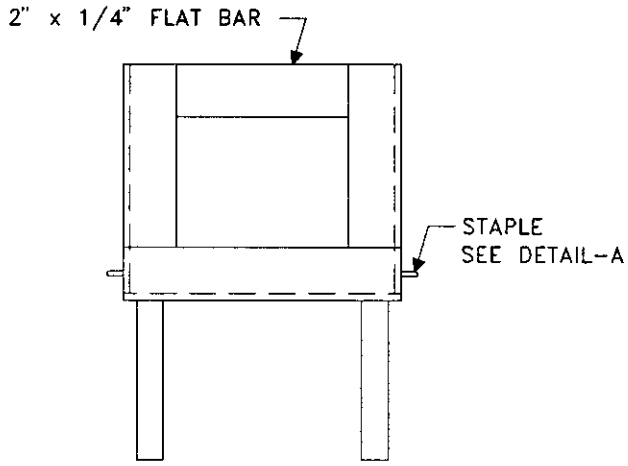

SIDE VIEW

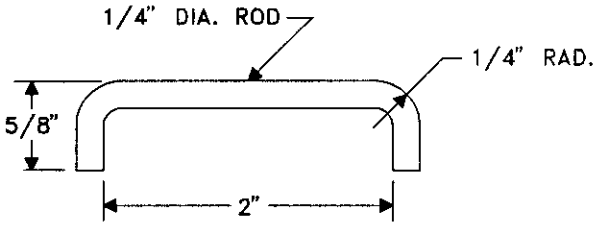

DETAIL A

DAMAGE CONTROL EQUIPMENT STOWAGE SKETCH # 097

WELDING MACHINE STOWAGE RACK

DCES097

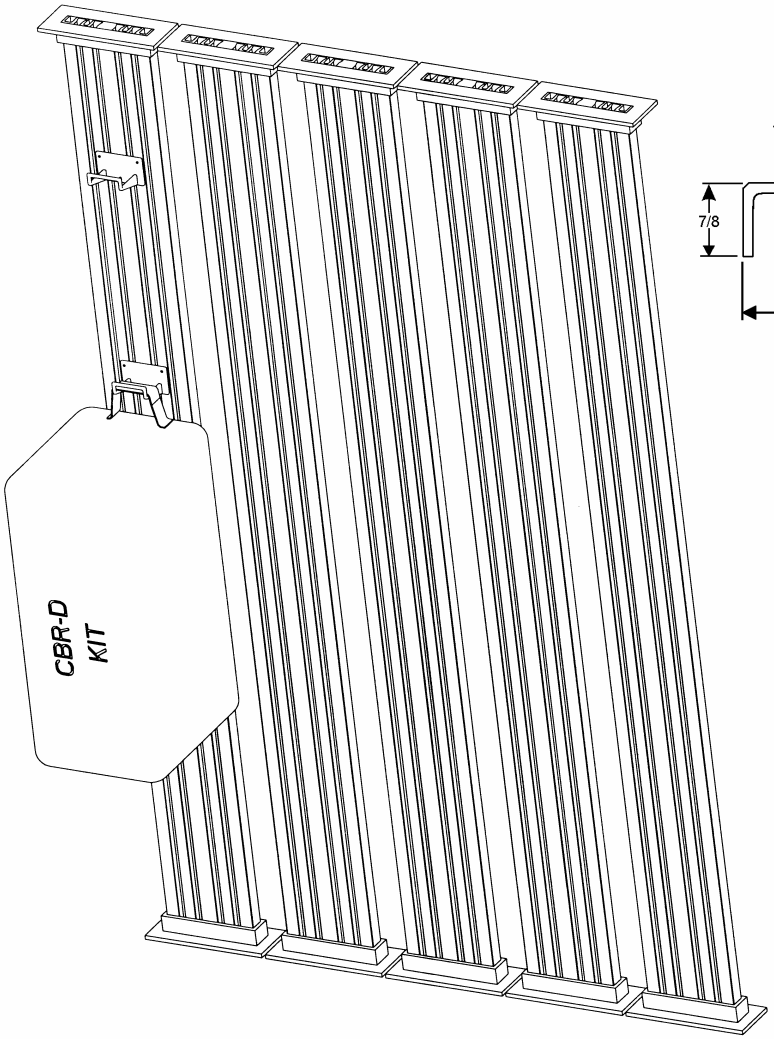

NEW SKETCH

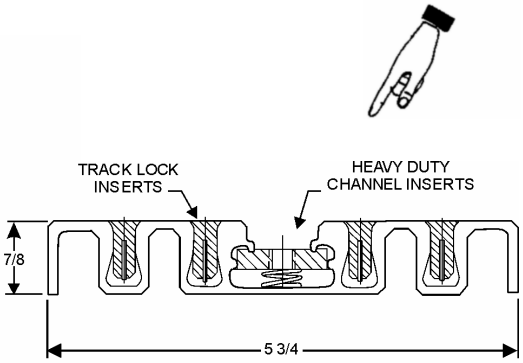

DUAL TRACK PROFILE

NOTE: 1. TRACK SYSTEM MUST BE EQUAL TO THOSE AVAILABLE FROM:
PERFORMANCE ADVANTAGE COMPANY (PAC)
P.O. BOX 306
LANCASTER, NEW YORK 14086
(716) 683-7413

DAMAGE CONTROL EQUIPMENT STOWAGE SKETCH #098

CBR-D IPE STOWAGE RACK

TRACK SYSTEM – VERTICAL MOUNT (DECK TO OVERHEAD)

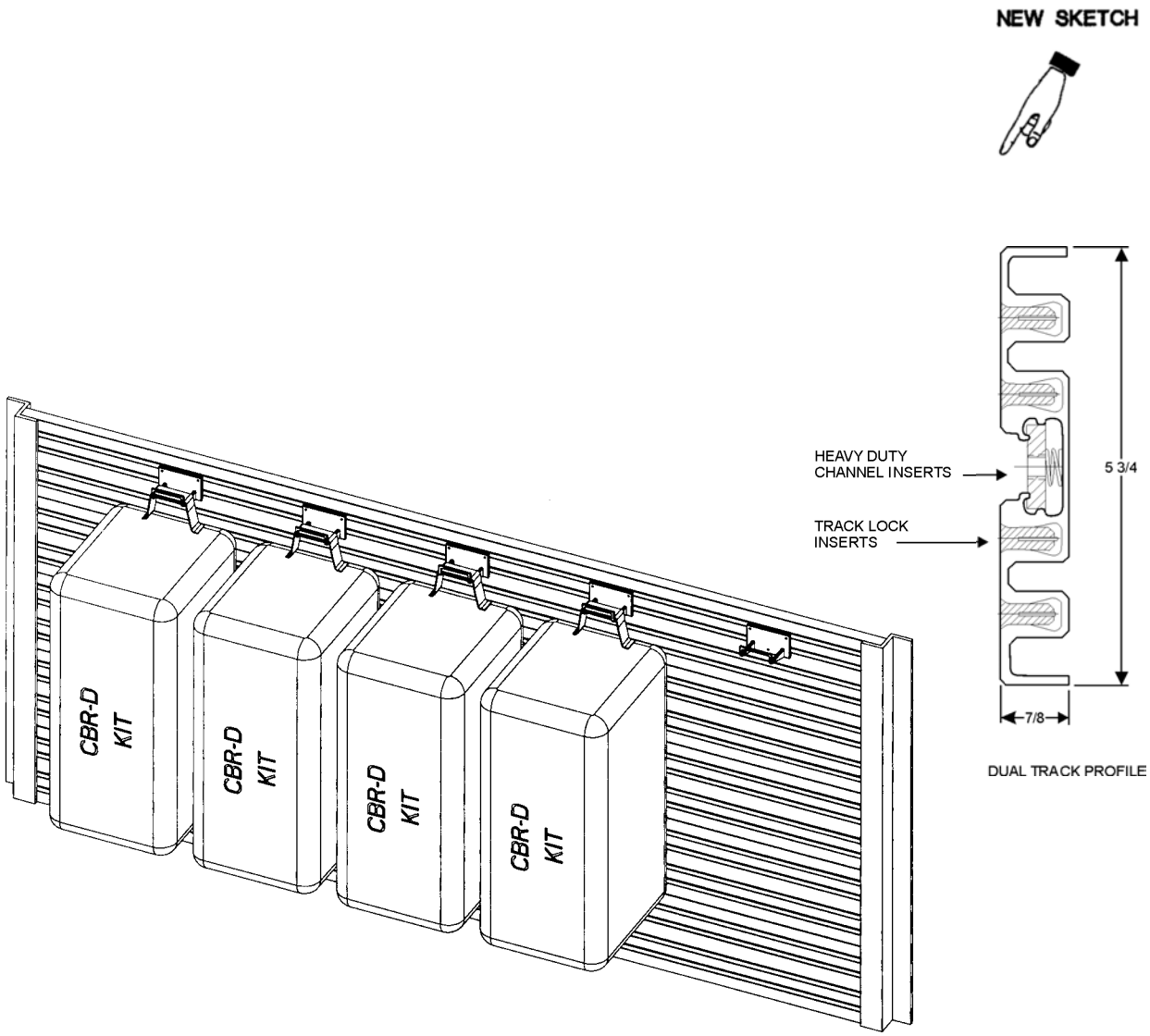

NOTE: 1. TRACK SYSTEM MUST BE EQUAL TO THOSE AVAILABLE FROM:
PERFORMANCE ADVANTAGE COMPANY (PAC)
P.O. BOX 306
LANCASTER, NEW YORK 14086
(716) 683-7413

DAMAGE CONTROL EQUIPMENT STOWAGE SKETCH #099

CBR-D IPE STOWAGE RACK

TRACK SYSTEM – HORIZONTAL MOUNT (BULKHEAD)

NEW SKETCH

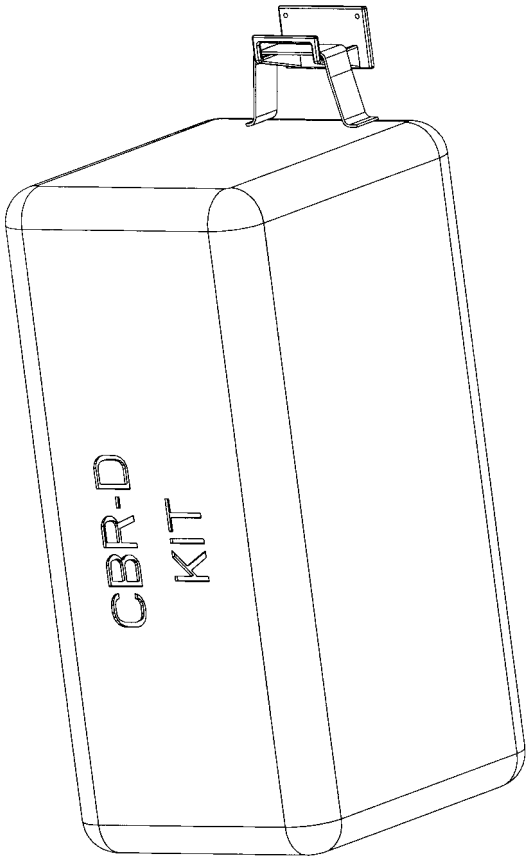

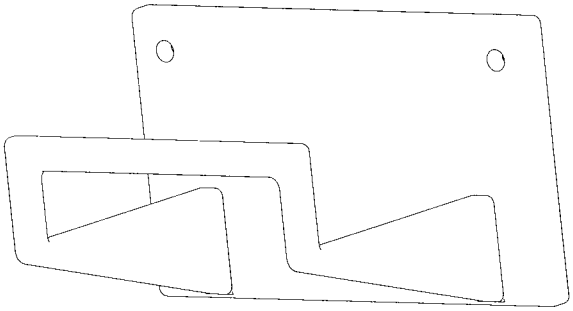

NOTE: 1. HOOK MUST BE EQUAL TO THOSE AVAILABLE FROM:
PERFORMANCE ADVANTAGE COMPANY (PAC)
P.O. BOX 306
LANCASTER, NEW YORK 14086
(716) 683-7413

DAMAGE CONTROL EQUIPMENT STOWAGE SKETCH #100

CBR-D IPE STOWAGE HOOK

NEW SKETCH

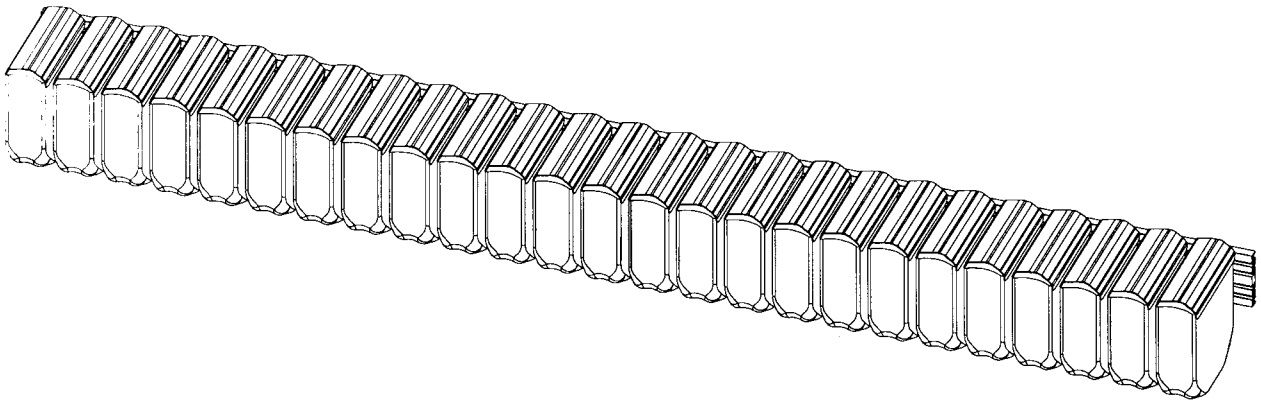

NOTE: 1. TRACK SYSTEM MUST BE EQUAL TO THOSE AVAILABLE FROM:
PERFORMANCE ADVANTAGE COMPANY (PAC)
P.O. BOX 306
LANCASTER, NEW YORK 14086
(716) 683-7413

2. SEE SKETCH #099 FOR TRACK DIMENSIONS.

DAMAGE CONTROL EQUIPMENT STOWAGE SKETCH #101

MCU-2P STOWAGE RACK

NEW SKETCH

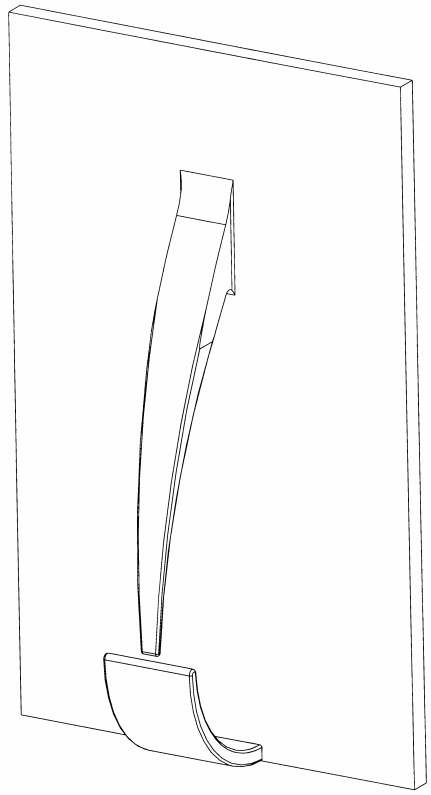

NOTE: 1. HOOK MUST BE EQUAL TO THOSE AVAILABLE FROM:
PERFORMANCE ADVANTAGE COMPANY (PAC)
P.O. BOX 306
LANCASTER, NEW YORK 14086
(716) 683-7413

DAMAGE CONTROL EQUIPMENT STOWAGE SKETCH #102

MCU-2P STOWAGE HOOK

STOWAGE AID BOOKLET
FOR
DAMAGE CONTROL EQUIPMENT

RECOMMENDATION/SUGGESTION FORM

In the interest of continually improving the damage control equipment, we would like to receive your suggestions for making this document a more effective tool for Navy personnel. To ensure that your suggestions are processed quickly and fully, please forward each recommendation on a separate form, with the requested information filled out on each. The recommendations will be reviewed and presented annually at the CNO's DC/FF Working Group. Thank you for your time and effort in helping us improve damage control equipment.

ORIGINATOR INFORMATION

Name:_____

Rank/Grade:_____

Ship/Station:_____

Address:_____

Daytime Phone Number:_____

Date:_____

RECOMMENDATION/SUGGESTION

What is the latest change incorporated into your Stowage Aid Booklet For DC Equipment? ____

Does this suggestion pertain to incorrect information currently contained in the Stowage Aid Booklet For DC Equipment? (Y/N)

If yes, what page(s) and paragraph(s) contain the error?

_____

Recommendation/Suggestion:_____

_____

_____

_____

NAVSEA Reviewer Information

Serial #_____ Date_____

Presented ___ Accepted ___ Rejected ___

Incorporated (Y/N) ___ Change # ___