CHAPTER 6

DOOR LATCH DEVICES

6-1. FUNCTION.

The purpose of door latch devices is to either provide for a controlled opening of a door where air pressure differential would normally cause the door to slam open or closed (Collective Protective System (CPS) latch) or to allow personnel to properly close a 3-dog, quick-acting airtight door with one hand (dog assist latch).

6-2. DESCRIPTION.

6-2.1 COLLECTIVE PROTECTIVE SYSTEM LATCH (MACHALT 167-53008 (ECP-523)). The Naval Surface Warfare Center, Carderock Division - Ship Systems Engineering Station (NSWCCD-SSES), style CPS latch is similar to a common gate latch. This latch is installed on doors of airlocks/pressure locks which are generally located in boundaries of CPS zones. This latch provides positive engagement by use of a latch bar and either a straight or ramped keeper. Both the latch bar and the keeper have a stellite coating applied to the contact surfaces to reduce wear. When the door is undogged, the door opens several inches before the latch bar hits the stop on the keeper and allows pressure on both sides of the door to equalize.

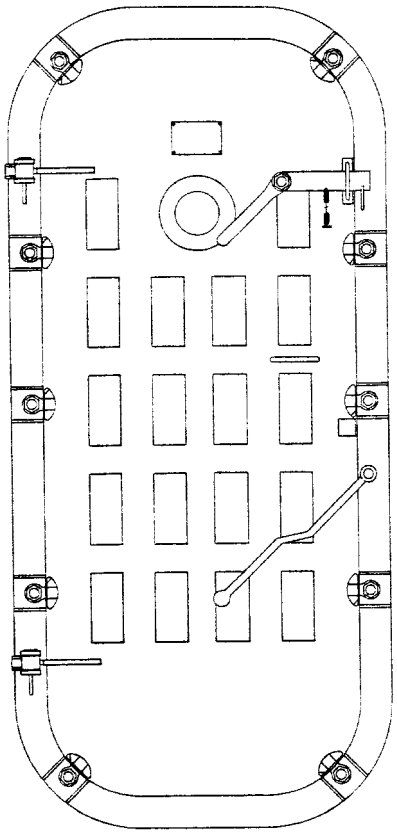

Figure 6-1. Door Latch Device

6-2.2 DOG ASSIST LATCH (MACHALT 167-53009 (ECP-514)). The dog assist latch, which is similar to the CPS latch, is installed on 3-dog, bound hinge airtight doors. As the description indicates, this latch is designed to assist personnel in properly closing and dogging airtight doors. These doors, when properly adjusted, start to

compress the gasket on the hinge side as the door swings to close. Typically, this generates a significant amount of resistance when the handle side of the panel is held closed against the knife-edge. Usually, the use of both hands is required to properly dog the door. In most cases, the door panel is not held tightly against the knife-edge prior to dogging the door. This results in the dogs striking the side of the door panel, causing structural damage to the panel and accelerated wear on the wedges. The dog assist latch provides a means of holding the door panel in the properly closed position (against the knife-edge) while dogging the door, thereby eliminating the need to use both hands. The only difference between the CPS latch and the dog assist latch is the length of the keeper. The CPS latch, when engaged, allows free movement of the door panel in order to facilitate pressure relief, whereas the dog assist latch is set to engage the keeper when the handle side gasket first contacts the knife-edge.

6-3. REPLACEMENT PARTS.

With the exception of the keeper, parts for the CPS latch and the dog assist latch are identical, and are illustrated in figure 6-2. The latch is designed to require little maintenance. The two flanged bushings used are self-lubricating and are the exact same bushings used in the quick-acting door operating handle sleeve. The bushings are equipped with an external O-ring and an internal T-seal to provide a watertight seal for the spindle sleeve. The commercial off-the-shelf type extension spring is externally mounted and easily repaired or replaced. All components of the latch assembly are CRES 316 and do not require preservation. Replacement parts are available in the Navy Stock System and can be identified on the applicable Allowance Parts List (APL).

6-4. INSPECT, CLEAN, AND LUBRICATE LATCH DEVICES (MACHALT 167-53009 (ECP-514) AND MACHALT 167-53008 (ECP-523)).

6-4.1 SAFETY. Before repairing any door latch device, obtain permission from the Engineering Officer to disable the door. Make an appropriate entry in the ship's closure log. Check with supervisor before starting work. Do not disassemble any door latch device while the ship is underway; perform only those emergency repairs required to keep that particular door operational.

Fasten or lash back any door which must remain open while work is being accomplished to prevent the door from swinging as the ship rolls. If possible, try to start and finish repair on the door in the same workday. This will prevent having an additional open closure after working hours when fewer crewmen are on board. Have on hand all parts required to repair the latch device before starting work. Notify a supervisor when the repairs are completed. Clear the entry in the ship's closure log.

6-4.2 GENERAL GUIDANCE FOR INSPECTIONS. The following principles apply to inspections for all watertight and airtight closures:

a. Comply with Navy Safety Precautions for Forces Afloat, OPNAVINST 5100 Series, which is found in each work center.

b. All tag-out procedures shall be in accordance with current shipboard instructions.

c. Accomplish inspection and maintenance in accordance with applicable Planned Maintenance System (PMS) documentation.

d. Replace loose, missing, or damaged parts, and parts showing excessive wear.

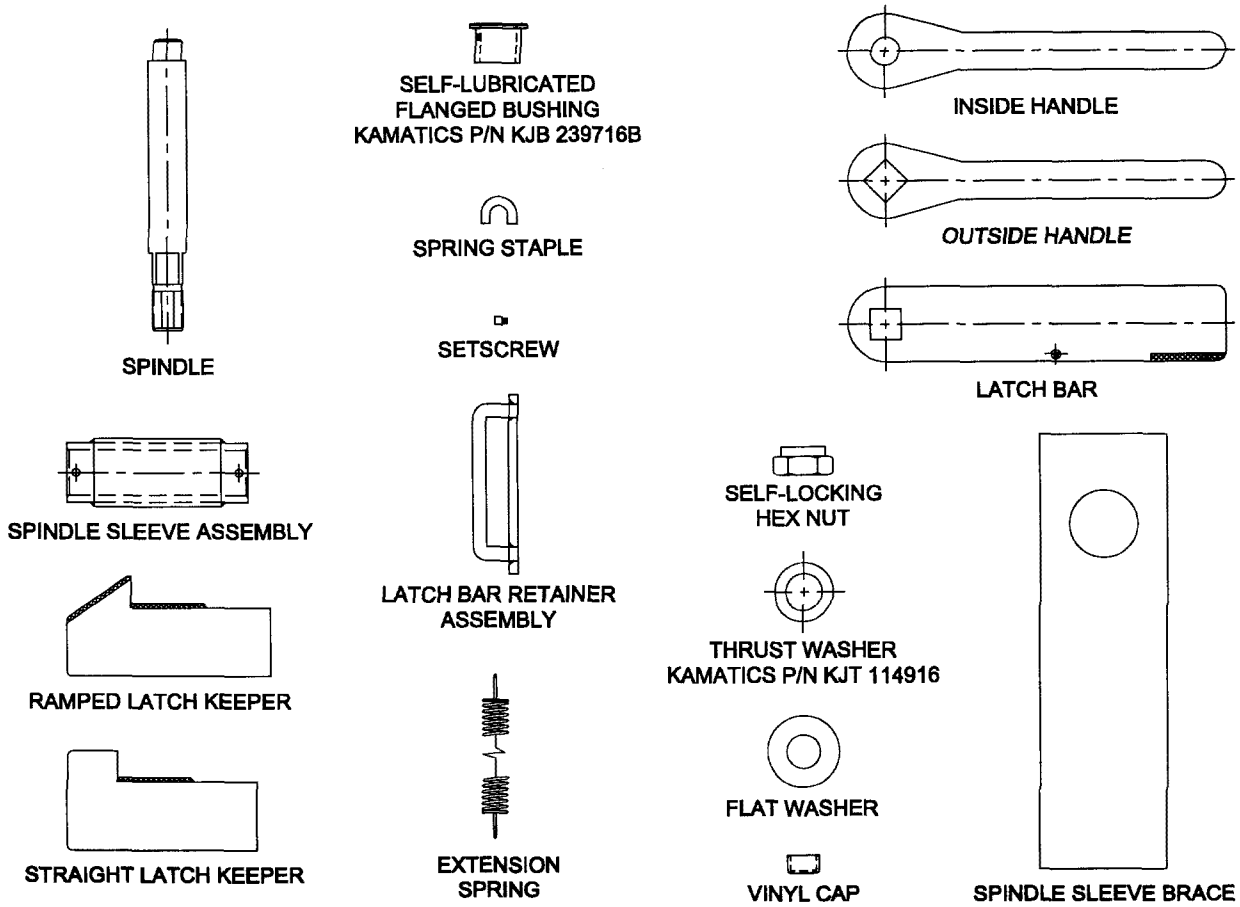

Figure 6-2. Latch Device Assembly Replacement Parts

e. Latches should be routinely inspected by Damage Control Petty Officers and Zone Inspectors for:

1. Loose, missing, and damaged parts.
2. Paint, rust, and other foreign matter on working parts such as flanged bushings.
3. Binding and difficult operation.
4. Distortion and deterioration of metal surfaces.
5. Broken and missing springs.

If any parts are missing or beyond repair, replacement parts can be obtained through the Navy Stock System. Additional assistance can be provided by NSWCCD-SSES, Attn: Code 9782, Philadelphia, PA, Hull Outfitting, DSN 443-7344, Commercial (215) 897-7344.

6-4.3 INSPECT, CLEAN, AND LUBRICATE.

6-4.3.1 Visual Inspection.

WARNING

All tag-out procedures must be in accordance with current shipboard instructions.

a. Deenergize applicable CPS supply and exhaust fans, and tag ″Danger: Out of Service.″ Shut door to be inspected.

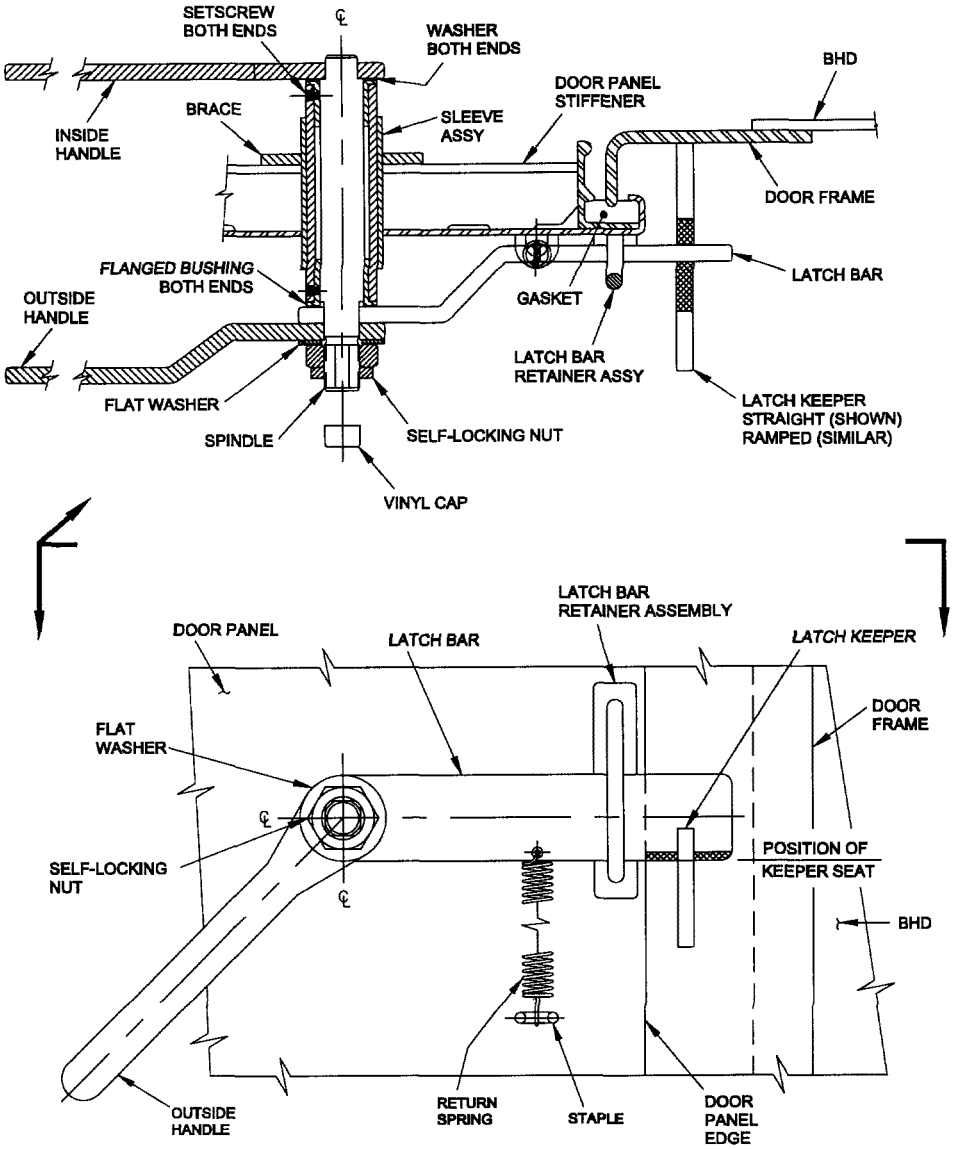

Figure 6-3. Latch Device

b. See figure 6-1 and figure 6-2 for identification of components, and inspect latch for the following:

1. Paint, rust, or other foreign matter on spindle, flanged bushings, setscrews, thrust washers, spindle sleeve, flat washer, self-locking hex nut, extension spring, and contact areas of working parts.
2. Distortion, damage, or deterioration of any components.
3. Obstructions in way of access to latch device and obstructions which interfere with operation of latch device.

CAUTION

Ensure that thrust washers are installed between the contact surface of the flanged bushings and the inside and outside handles. Missing thrust washers will result in damage to the self-lubricating lining on the flanged face of the bushing.

4. Loose or missing self-locking nut, flat washer, and thrust washers on latch spindle.
5. Loose or missing setscrews for flanged bushings. Setscrews should be flush or slightly recessed in spindle sleeves and tight.
6. Missing or stretched extension spring, and missing or damaged spring staple. Ensure that spring loop ends are crimped closed around latch bar and spring staple.
7. Missing or damaged inside handle, outside handle, latch bar, latch bar retainer, latch keeper, and slide bar.
8. Worn stellite coating on latch bar and latch keeper. The coating shall be considered worn out when 3/32-inch of material has been lost from the original 1/8-inch thick coating.
9. Cracked or broken welds on spindle sleeve, sleeve brace, inside handle, latch keeper, spring staple, latch bar retainer, and slide bar.
10. Loose or flaking paint and rust on door panel at spindle sleeve penetration and in the immediate vicinity of latch bar retainer, slide bar, and spring staple.
11. Latch handles interfering with the proper operation of the darken ship covers over fixed lights.

WARNING

Ensure a minimum 2-inch hand clearance exists between the door dogging handle and any latch device component.

12. Latch device assembly does not interfere with operating door dogging handle.
13. Operate latch device through latch/unlatch cycle, and inspect for binding or excessive play between spindle, spindle sleeve, and flanged bushings. When the handle is released, the latch bar should return to latched position. Binding can be caused by overtightening self-locking nut, friction between contact surfaces of latch bar and retainer/slide bar, or no lubrication on O-rings in flanged bushings. Excessive play indicates worn flanged bushings or improperly tightened self-locking nut.
14. Inspect for worn flanged bushings. Grasp inside handle (handle welded to spindle), and attempt to shake it up and down, and side to side. If movement occurs, bushings are worn. In and out movement is not an indication of worn bushings, but an indication of an overtightened self-locking nut.
15. For doors installed with square latch keepers, close door from open position. Ensure that latch bar contacts vertical face of latch keeper and prevents door from fully closing until latch bar is raised to unlatch position.
16. For doors with ramped latch keepers, close door from open position. Ensure that latch bar contacts ramped (sloped) section of latch keeper and travels up and over keeper, allowing door to close fully. If latch bar contacts the vertical portion of keeper, either the door panel has dropped because of worn hinge washers and hinge pins or the latch assembly was not properly aligned when installed.

6-4.3.2 Clean and Lubricate.

a. Remove vinyl cap, self-locking hex nut, and flat washer from spindle.

CAUTION

Do not allow latch bar to hang freely, supported only by the extension spring, as damage to extension spring may occur. Support latch bar with extension spring by taping it to the door panel with duct tape.

b. Remove outside handle, latch bar, and thrust washer.

WARNING

Respiratory protective equipment must be worn if exhaust ventilation (fixed or portable) is not in operation or is inadequate. If unsure whether ventilation is adequate, consult work center supervisor.

c. Remove spindle from spindle sleeve assembly. Retain spindle CRES thrust washers for reinstallation.

d. Remove setscrew from self-lubricated flanged bushings.

e. Remove self-lubricated flanged bushings.

WARNING

Wear safety goggles when wire brushing with power drill.

f. Clean contact surfaces of latch bar, latch keeper, slide bar, and latch bar retainer with aluminum oxide abrasive cloth, no. 320 grit, or wire wheel only if paint or rust exists. Use clean rag to remove abrasive grit remaining on components.

g. Clean self-lubricated flanged bushings with clean, dry rag. Inspect external O-ring, internal T-seal, and bearing liner for wear or damage.

h. Clean inside surface of spindle sleeve assembly and surface of spindle using a rag.

CAUTION

Under no circumstances should abrasive cloth, wire brush, or metal scraper be used to clean latch spindles, inside surface of spindle sleeves, or thrust washers, as this will damage machined surfaces of these components.

i. Clean surfaces of latch spindle, inside surface of spindle sleeve assembly, and thrust washers with crocus cloth only if paint or surface rust exists. Use clean rag to remove grit or debris.

j. Inspect for nicks or burrs on spindle and in spindle sleeve assembly in flanged bushing contact area. If found, file smooth. Use clean rag to remove grit or debris.

k. Inspect for damaged or stripped threads on spindle. If found, chase threads with rethreading die.

l. Reinstall self-lubricated flanged bushings.

m. Reinstall setscrews into self-lubricated flanged bushings.

n. Reinstall spindle into spindle sleeve assembly.

o. Reinstall thrust washer, latch bar, and outside handle.

p. Reinstall flat washer and self-locking hex nut on spindle.

q. Reinstall vinyl cap onto threads of spindle.