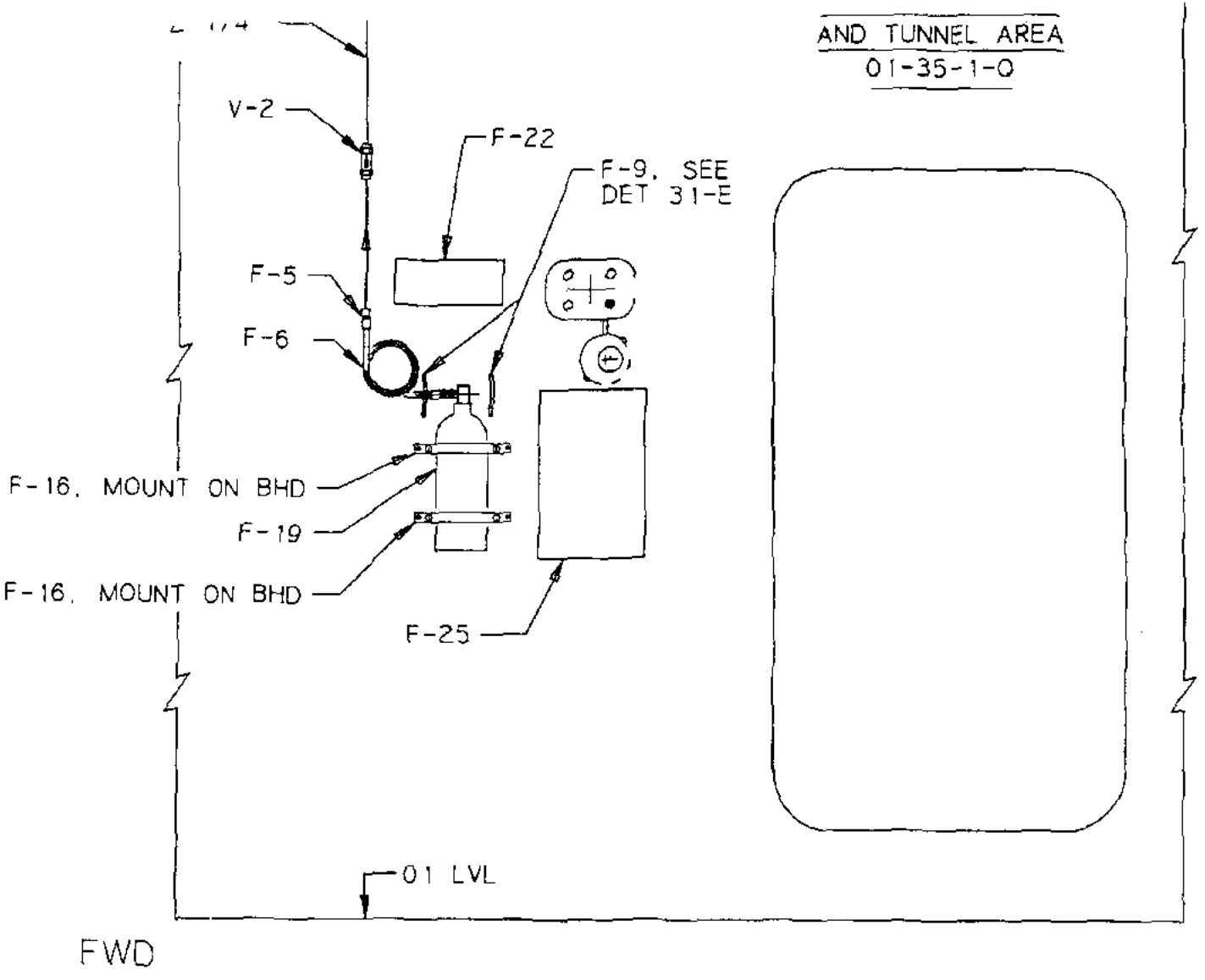
AND TUNNEL AREA
01-35-1-0
V-2
F-22
F-9, SEE
DET 31-E
F-5
F-6
F-16, MOUNT ON BHD
F-19
F-16, MOUNT ON BHD
F-25
01 LVL
FWD

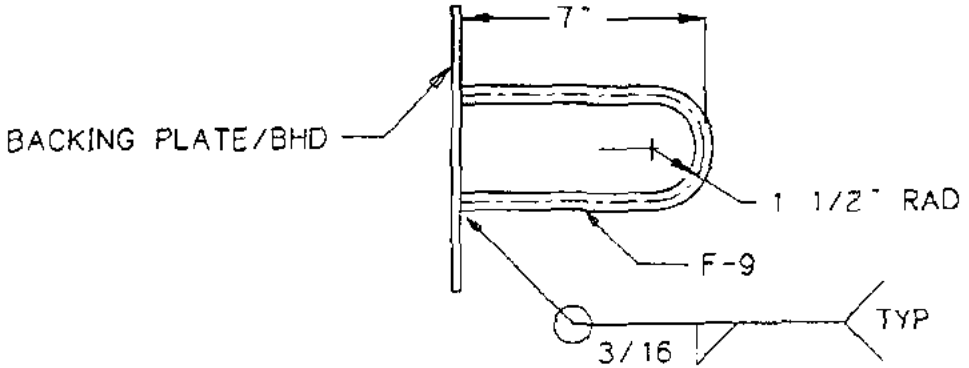

DETAIL 31-E

ACTUATOR GUARD

SCALE : 3" = 1'-0"

Note: F-9 is 1/2" steel
(ASTM A36) rod