NONRESIDENT
TRAINING
COURSE

Damage Controlman

NAVEDTRA 14057

DISTRIBUTION STATEMENT A: Approved for public release; distribution is unlimited.

PREFACE

About this course:

This is a self-study course. By studying this course, you can improve your professional/military knowledge, as well as prepare for the Navywide advancement-in-rate examination. It contains subject matter about day-to-day occupational knowledge and skill requirements and includes text, tables, and illustrations to help you understand the information. An additional important feature of this course is its references to useful information in other publications. The well-prepared Sailor will take the time to look up the additional information.

Any errata for this course can be found at https://www.advancement.cnet.navy.mil under Products.

History of the course:

- *Apr 2001: Original edition released.*
- *Aug 2003: Administrative update released. Technical content was not reviewed or revised.*

Published by
NAVAL EDUCATION AND TRAINING
PROFESSIONAL DEVELOPMENT
AND TECHNOLOGY CENTER
https://www.cnet.navy.mil/netpdtc

POINTS OF CONTACT	ADDRESS
• E-mail: fleetservices@cnet.navy.mil • Phone: Toll free: (877) 264-8583 Comm: (850) 452-1511/1181/1859 DSN: 922-1511/1181/1859 FAX: (850) 452-1370	COMMANDING OFFICER NETPDTC N331 6490 SAUFLEY FIELD ROAD PENSACOLA FL 32559-5000

NAVSUP Logistics Tracking Number
0504-LP-026-7250

TABLE OF CONTENTS

CHAPTER		PAGE
1	Damage Controlman Rating	1-1
2	Damage Control Organization, Communication, and Information	2-1
3	Ship Compartmentation and Watertight Integrity	3-1
4	Fire-Fighting Fundamentals	4-1
5	Portable Fire-Fighting and Dewatering Equipment	5-1
6	Fire-Fighting Systems	6-1
7	Fire-Fighting Tactics	7-1
8	Battle Damage Repair	8-1
9	Chemical and Biological Warfare Defense	9-1
10	Radiological Effects	10-1
11	Radiological Defense and Recovery	11-1
12	Ship Stability and Buoyancy	12-1
13	Shipboard Damage Control Training	13-1

APPENDIX

I.	Glossary	AI-1
II.	Damage Control Abbreviations	AII-1
III.	Damage Control Symbology	AIII-1
IV.	References Used to Develop This Nonresident Training Course	AIV-1

INDEX INDEX-1

ASSIGNMENT QUESTIONS follow Index.

CHAPTER 1

DAMAGE CONTROLMAN RATING

Learning Objectives: Recall the primary duties and responsibilities of personnel in the Damage Controlman rating, the duties and responsibilities for damage control of other key personnel in the chain of command, and the various damage control administrative programs, directives, and reports.

The Damage Controlman rating is a general rating and has no service ratings associated with it. As you become familiar with the requirements for advancement in this rating, you will recognize that the requirements for the rating are quite extensive.

RATING RESPONSIBILITIES

Learning Objective: Recall the duties and responsibilities of the Damage Controlman rating.

As a Damage Controlman, your tasks and duties will include the following:

- Organizational and intermediate level maintenance and repair of damage control equipment and systems.
- Plan, supervise, and perform tasks necessary for damage control, ship stability, preservation of watertight integrity, fire fighting, and chemical, biological, and radiological (CBR) warfare defense.
- Instruct and coordinate damage control parties.
- Instruct personnel in the techniques of damage control and CBR defense.
- Supervise and perform tasks in procurement and issuance of supplies and repair parts; and prepare records and reports.

LEADERSHIP

As you advance in the Damage Controlman (DC) rating, you will have increasing responsibilities for military and technical leadership. Every petty officer must be a military leader as well as a technical specialist; however, your responsibilities are unique to the DC rating and are directly related to the nature of your work. Your ability to lead others is particularly important because in casualty situations damage control often becomes an "all-hands" evolution. In these situations, a Damage Controlman holds a key position in the damage control organization and is required to coordinate the efforts of others for the successful control of damage. For these reasons, you must possess qualities of leadership as well as be highly skilled and knowledgeable in the field of damage control.

Organization and teamwork are the keys to successful damage control. Strong leadership is required to keep the organization functioning and to ensure effective teamwork needed to meet the following goals:

1. Preserve or reestablish watertight integrity, stability, maneuverability, and offensive power.
2. Control list and trim.
3. Repair material and equipment.
4. Limit the spread of, and provide protection from fire.
5. Limit the spread of, remove the contamination by, and provide adequate protection against chemical and biological agents or noxious gases and nuclear radiation.
6. Care for wounded personnel.

BASIC OBJECTIVES OF DAMAGE CONTROL

Shipboard damage control is designed to work toward three basic objectives. These objectives are as follows:

1. Take all practicable preliminary measures to prevent damage.
2. Minimize and localize damage as it occurs.
3. Accomplish emergency repairs as quickly as possible, restore equipment to operation, and care for injured personnel.

The damage control organization has the same objectives whether the country is at peace or at war. The ship's ability to perform its mission will depend upon the effectiveness of its damage control organization.

To attain these objectives, we must accomplish the following:

1. Preserve stability and fume-tight and watertight integrity (buoyancy).
2. Maintain the operational capabilities of vital systems.
3. Prevent, isolate, combat, extinguish, and remove the effects of fire and explosion.
4. Detect, confine, and remove the effects of chemical, biological, or radiological contamination.
5. Prevent personnel casualties and administer first aid to the injured.
6. Make rapid repairs to correct structural and equipment damage.

AREAS OF RESPONSIBILITY

The three primary areas of responsibility for damage control include the following:

1. The functional combination of all equipment, material, devices, and techniques that prevent and minimize damage and restore damaged equipment and structures. This damage can occur in wartime or peacetime.
2. The passive defense against conventional, nuclear, biological, and chemical warfare.
3. All active defense measures short of those designed to prevent successful delivery of an enemy attack by military means or sabotage.

PROFESSIONAL DEVELOPMENT

Because damage control covers a wide variety of areas, training is essential for an effective emergency party. This training is accomplished in several ways. You may learn through schools, correspondence courses, on-the-job training, shipboard training lectures, and films. Most of the training programs available are explained in the following paragraphs.

Navy Schools

There are a number of Navy schools to train personnel in damage control. Your damage control assistant normally requests quotas to send a complete repair party to a school as a unit. Members of the repair parties train together and learn to work as a unit. These schools include shipboard damage control, shipboard fire fighting, and aviation fire fighting. Figure 1-1 shows fire-fighting training being conducted at the Damage Control School in Great Lakes, Illinois. Refer to the *Catalog of Navy Training Courses (CANTRAC)* for the latest listing of courses available. This catalog is available from your Education Services Office (ESO).

Figure 1-1. Damage control team training.

Nonresident Training Course

This nonresident training course (NRTC) is designed for the Damage Controlman rating. There are other recommended courses that are good sources of training; a good example is *Blueprint Reading and Sketching*, NAVEDTRA 82014. This and other courses may be ordered through your ESO.

On-the-Job Training

Another method of training is on-the-job training. This training method allows you to learn while performing your daily tasks. Your fellow workers and supervisors may teach you by sharing their knowledge with you. Additionally, you may learn on your own by studying applicable publications.

On-the-job training is also carried out through emergency drills. These drills help train emergency party personnel to perform their assignments in a professional manner. The drills also train individuals to work together as an effective unit.

Sources of Information

There are many valuable sources of information about damage control. Some of the more important of these sources of information that you should become familiar with are stated below.

MANUFACTURERS' TECHNICAL MANUALS.—You should have access to the manufacturer's technical manuals for your equipment. These manuals provide information on the operation, maintenance, and repair of a specific piece of equipment, and you should always use the one for the equipment you are required to work on.

***NAVAL SHIPS' TECHNICAL MANUAL* (*NSTM*).—**A complete set of *Naval Ships' Technical Manuals* should be available in the engineering log room. They are usually available on a single CD-ROM and may be available on a ship-wide network. These manuals cover different aspects of damage control, which include the following: fire fighting, flooding, ship's stability, and CBR countermeasures. Study of the NSTMs will help you complete your damage control personnel qualification standards.

DAMAGE CONTROL BOOKS.—Damage control books are furnished to all naval ships over 220 feet long and to some select smaller ships. Ships under 220 feet long that are not issued a damage control book may develop their own. These books contain descriptive information, tables, and diagrams. Each book is pertinent to an individual ship. The information given covers the following six subjects:

1. "Damage control systems"
2. "Ship's compartmentation"
3. "Ship's piping systems"
4. "Ship's electrical systems"
5. "Ship's ventilation systems"
6. "General information"

Naval Sea Systems Command (NAVSEA) maintains a record of all damage control books distributed. The books may not be transferred without NAVSEA authorization. The engineer officer is normally the custodian of the damage control books. Upon transfer, this officer must account for all copies before passing custody to the relieving officer.

You may requisition additional books with diagrams lithographed in color from the Naval Supply Depot, Philadelphia. Books with black-and-white diagrams should be requested from the planning yard of the ship. Copies of the damage control book should be available in DC central, main engine control, and each repair party locker.

It is important to keep all copies of the ship's damage control book up to date. One copy should be considered the "master copy" and be kept current at all times by the damage control assistant (DCA). The master copy is then used to update the other copies. *NSTM*, chapter 079, volume 2, contains the guidelines for updating a damage control book. These changes include alterations completed by ship's force and those completed by other activities. When the ship is decommissioned and scheduled for disposal or scrapping, the damage control books should be burned and their disposition reported to NAVSEA.

REPAIR PARTY MANUAL.—The type commander is responsible for the preparation of a standard repair party manual for ships under his or her authority. The repair party manual provides detailed information on the standard methods and techniques used in damage control as outlined in *U.S. Navy Regulations*, NWP 3-20.31.

The repair party manual should include damage control procedures covering emergency damage control communications, casualty power, and counterflooding (where applicable). Door-and-hatch locations, air-conditioning and ventilation systems, and compressed air systems are also included. In addition, a standard repair party manual may include the following information:

1. A listing of the important features of each repair party area, including machinery, storage spaces, location of repair lockers, and magazines

2. Protective measures involving material and personnel with respect to imminent air attack, surface attack, underwater attack, fire, collision, and CBR attack

3. Methods of investigating damage; necessary precautions and means of reporting damage

4. Use of equipment for the following purposes: fire fighting, flooding control, repairing damage in action (shoring, pipe patching, etc.)

5. Controlling CBR contamination (monitoring, reporting, and decontamination of material)

6. Personnel casualty control (first aid and decontamination)

7. Primary and alternate methods of providing emergency service to vital systems by means of casualty power, emergency communications, and jumpers to restore firemain or magazine sprinkling service

8. Damage control central (DCC) location, equipment layout, communications, and personnel

9. A chain of command diagram

10. A secondary DCC description

11. Repair parties personnel billets, including duties, functions, and responsibilities; subunits (where applicable); and required publications, plates, plans, and diagrams

NOTE

Charts, diagrams, or detailed listings of fittings are not required in the type repair party manual. Such information is available in other publications. One of these is the NAVSEA damage control book, which should be available at every repair party locker.

Commanding officers, with the assistance of their engineer officers and DCAs, are responsible for ensuring that the standard repair party manual for their ship has only correct, complete, and up-to-date information.

SHIP INFORMATION BOOK (SIB).—When a ship is built for the Navy, the builder prepares a ship information book (SIB). The ship's crew uses the SIB to familiarize themselves with the ship's characteristics. Normally the SIB will contain the following eight volumes:

1. *Hull and Mechanical*
2. *Propulsion Plant*
3. *Auxiliary Machinery, Piping, Ventilation, Heating, and Air-Conditioning Systems*
4. *Power and Lighting Systems*
5. *Electronic Systems*
6. *Interior Communications*
7. *Weapons Control Systems*
8. *Ballasting Systems*

A copy of the SIB is forwarded to NAVSEA. Then NAVSEA prints and distributes copies of the SIB to the appropriate locations. When changes are made to the ship, corrections to the SIB should be sent to NAVSEA. NAVSEA will incorporate the corrections, and reprint and distribute the revised SIB.

TRAINING FILMS.—Training films available are listed in the *Department of the Navy Catalog of Audiovisual Production Products*, OPNAVINST 3157.1. The training films are effective training tools especially for presentations of realistic situations. For example, one film shows an actual fire being fought on an aircraft carrier. The people in the films are not actors; they are sailors combating a casualty. The personnel casualties are real. These films will show that damage control is serious business and an "all-hands" responsibility.

PERSONNEL QUALIFICATION STANDARDS (PQS).—The *General Damage Control Qualification Standard*, NAVEDTRA 43119-2, is mandatory for all hands. You should also be familiar with the following damage control qualification standards:

- *Damage Control Emergency Parties Qualification Standard*, NAVEDTRA 43119-3
- *Damage Control Systems and Equipment Qualification Standard*, NAVEDTRA 43119-4
- *Division Damage Control Petty Officer (DCPO) Qualification Standard*, NAVEDTRA 43119-5

You will be assigned to a repair locker for general quarters and an in-port emergency party. You will be required to complete the appropriate sections of PQS that cover your assignments. You should try to complete all sections up to and including the section on "Repair Party Scene Leader." In doing so, you will gain valuable knowledge in damage control, and, if necessary, you will be capable of taking over as scene leader during an emergency.

GENERAL SOURCES.—As a Damage Controlman you should understand the Ship's Maintenance and Material Management (3-M) System, as well as supply and inventory control procedures. This knowledge is required for advancement. You will find the necessary information in the *Ship's 3-M Manual*, OPNAVINST 4790.4 (series). Additionally, you will have responsibilities in other shipboard programs, such as *Quality Assurance*, CINCLANTFLT/CINCPACFLTINST. 4790.3; and the Heat Stress and Hearing Conservation Programs. These and other topics will be covered in more detail later.

REVIEW QUESTIONS

Q1. Organization and teamwork are the key factors for successful damage control.

1. True
2. False

Q2. The basic objectives of shipboard damage control are as follows: take measures to prevent damage, minimize and localize damage as it occurs, accomplish repairs as soon as possible, restore equipment to operation, and care for injured personnel.

1. True
2. False

Q3. What person is normally responsible for requesting quotas to send a repair party to school for training?

1. Administrative officer
2. Engineer officer
3. Damage control party supervisor
4. Damage control assistant

Q4. What publications contain information (tailored to your ship) on damage control systems, ventilation systems, piping systems, electrical systems, and compartmentation?

1. Ship information book
2. Damage control books
3. *NSTM* 44 series
4. NWP 3-20.31 and *Ship's 3-M Manual*

Q5. What eight-volume series of books can help you familiarize yourself with your ship's characteristics?

1. NWP 3-20.31
2. Damage control books
3. Ship information book
4. *NSTM* 99 series

DAMAGE CONTROL RESPONSIBILITIES OF KEY PERSONNEL

Learning Objective: Recall the damage control responsibilities of key personnel in the chain of command.

The damage control responsibilities presented in this chapter are taken from *U.S. Regulations*, *Surface Ship Survivability*, NWP 3-20.31, and OPNAVINST 3120.32A.

Damage control is the responsibility of "all hands" which includes everyone in each department aboard ship from the newest recruit to the commanding officer. Damage control is the responsibility of all hands. All personnel must know their assignments within the damage control organization and understand the importance of those assignments. Damage control cannot be overemphasized. The necessary state of readiness can only be achieved through a reliable damage control program. The program must be supervised by an influential and energetic individual who is enthusiastic, well trained, and determined.

All areas of responsibility for damage control cannot be covered completely in this chapter; however, the basic responsibilities of key individuals are presented in the following paragraphs.

COMMANDING OFFICER

Chapter 7 of *U.S. Navy Regulations* describes the various broad responsibilities of the commanding officer (CO). One of the requirements is that the CO "…maintain his or her command in a state of maximum effectiveness for war or other service …." The CO should "Immediately after a battle or action, repair damage so far as possible, (and) exert every effort to prepare his command for further service …."

To carry out his or her orders, the commanding officer must ensure that the command is adequately trained. This training is done through lectures, schools, and continual exercises in all aspects of damage control. The commanding officer should be fully aware of all of the ship's weaknesses. These include the inadequacy and inoperability of all damage control equipment. Shortages and defects should be corrected immediately.

EXECUTIVE OFFICER

The executive officer (XO) advises the commanding officer on the status of the ship's damage control readiness. This officer must be intimately familiar with all damage control evolutions, and this includes supervision of all actions related to damage control.

The XO ensures that responsible personnel carry out the following requirements:

- Conduct damage control training for the ship's company.
- Maintain ship's readiness to combat all casualties and damage that threaten the ship.

OFFICER OF THE DECK

The officer of the deck (OOD) is the senior member of the underway watch team. As the primary assistant to the commanding officer on the bridge, the OOD will carry out the following duties and responsibilities:

- Be intimately familiar with the ship. This includes its material condition and the established procedures for emergencies.

- Know the correct course of action or options for various damage control situations.
- Promptly analyze a situation and take prompt, positive, and correct counteraction.
- In the absence of the commanding officer, maneuver the ship.

The OOD's ability to act properly and promptly will be in direct proportion to the officer's training, knowledge of the ship, damage control procedures, and equipment available.

COMMAND DUTY OFFICER IN PORT

The command duty officer (CDO) in port is designated by the commanding officer. This officer is eligible for command at sea and is the deputy to the executive officer for a prescribed period of time. The CDO will carry out the following duties and responsibilities:

- Carry out the ship's daily routine in port.
- Carry out the duties of the XO during the temporary absence of that officer.
- Advise and, if necessary, direct the OOD in matters concerning the general duties and safety of the ship.
- Keep informed of the ship's position, mooring lines, or ground tackle in use.
- Know the status of the engineering plant and all other matters that affect the safety and security of the ship.
- In times of danger or emergency, take any action necessary until relieved by a senior officer in the succession of command.
- Relieve the OOD when necessary for the safety of the ship, and inform the commanding officer when such action is taken.

DEPARTMENT HEADS

We can achieve adequate damage control readiness only by the participation of all departments aboard ship. For this reason, each department head will carry out the following duties and responsibilities:

- Ensure that the material conditions of readiness within the department are at their best. Compartment check-off lists provided by the damage control assistant (DCA) prescribe material conditions. The DCA is discussed later in this chapter.
- Provide for continual and periodic inspections of department spaces according to current planned maintenance system (PMS) procedures.
- Require that damage control equipment and fittings be maintained in their proper locations and in operating order.
- Provide personnel for damage control, repair, fire, salvage, and rescue parties, and for other assignments as required by the ship's organization bills.
- Require that departmental material and equipment are secured to protect them from damage by heavy seas.
- Require an immediate report to the DCA of any deficiency in damage control markings, devices, fittings, equipment, or material, and initiate corrective action.
- Train personnel in damage control matters in coordination with the DCA.
- Be prepared to strip ship, or clear for action, according to the ship's instructions.

ENGINEER OFFICER

The engineer officer is also known as the damage control officer. This officer is responsible to the commanding officer for the following duties and responsibilities:

- The operation, care, and maintenance of the main propulsion plant, auxiliary machinery, and piping systems
- The control of damage
- The operation and maintenance of electric power generators and distribution systems
- The repairs to the hull
- The repairs to material and equipment of other departments that are beyond the capacity of those departments but within the capacity of the engineering department

In amplification of the duties contained in *U.S. Navy Regulations*, the engineer officer is required to carry out the following duties and responsibilities:

- Maintain the hull, machinery, and electrical system in battle readiness.

- Supervise fire fighting. Ensure that the ship's fire bill is adequate. Assign and instruct personnel according to the provisions of the bill.
- Maintain interior communication equipment.
- Control and restore engineering and ship control casualties.
- Coordinate all naval shipyard work. This includes all correspondence or communications on alterations or repairs to the hull and installed equipment.
- Maintain the PMS and other operating and maintenance records.
- Act as technical assistant to the executive officer to carry out chemical, biological, and radiological (CBR) defense procedures.
- Provide ship facilities, equipment, and key personnel to repair the hull and machinery. Ensure repairs to material and equipment of other departments that are within the capacity of the engineering department.
- Organize Repair 5 (Propulsion) according to the ship's battle bill.
- Supervise the training of Repair 5.
- Assign appropriate engineering ratings to other repair parties according to the ship's battle bill.

DAMAGE CONTROL ASSISTANT

The damage control assistant (DCA) is responsible to the engineer officer for the control of damage. This includes the control of stability, list, and trim. It also includes fighting fires, repairing damage, and maintaining CBR defense.

The DCA is the overall coordinator of damage control matters within the command organization. This responsibility includes the ship's damage control training program. During emergency situations, the DCA controls the damage control problem with the technical advice and assistance of all departments. Fires and other damage that occur while the ship is at general quarters will be handled as a battle casualty. Corrective action under the direction of the DCA will be taken by the repair parties in the vicinity. On aircraft carriers, the ship's air officer will direct repair parties for fires in aircraft or associated equipment on the flight deck or in the hangar bays.

The DCA is required to perform the following damage control duties and responsibilities:

- Prepare directives for the signature of the commanding officer in connection with all damage control functions requiring coordination of departments.
- Submit to the planning board for training, a schedule of all-hands damage control training requirements, including battle problem requirements.
- Prepare a damage control training syllabus, and provide damage control instructors for all-hands training.
- Furnish standard damage control equipment (tools, portable lights, and portable pumps) to repair party lockers and to other prescribed locations throughout the ship. Conduct periodic inspections of such equipment.
- Assign Damage Controlmen and Hull Maintenance Technicians to various repair parties according to the ship's battle bill and manning document.
- Conduct inspections throughout the ship, accompanied by the cognizant department head, to ensure that the ship's watertight integrity is maintained. Ensure that all departments are maintaining a high degree of damage control readiness.
- Ensure that the master damage control book is updated whenever alterations are made to the ship.
- Ensure that damage control compartment check-off lists are posted.
- Ensure that damage control markings, routes, stations, and labels are posted throughout the ship.
- Ensure that emergency escape routes to weather decks are clearly labeled.
- Maintain a damage control central (DCC) with facilities to evaluate damage to the ship's hull and equipment and to make decisions to counteract the effects of such damages. Coordinate repair parties and keep the commanding officer informed of major developments.
- Prescribe routes for transporting injured personnel to battle dressing stations.

- Ensure that an effective organization is always present for execution of each of the emergency bills.
- Inform the engineer officer of any condition or practice that lowers the damage control readiness of the ship.
- Organize Repairs 1, 2, 3, 4, and 7 according to the ship's battle bill.
- Personally direct the training of Repairs 1, 2, 3, 4, and 7, and DCC personnel.
- Ensure, in coordination with department heads, that DCPOs are trained to accomplish their assigned duties.
- Act as or supervise the duties of the gas free engineer.
- Ensure that a liquid load status is provided daily to damage control central and all repair lockers (list status in feet and inches).

DAMAGE CONTROL SUPERVISOR

The damage control supervisor (DCS), when assigned, will carry out the following duties and responsibilities:

- Supervise the maintenance of any material condition of readiness in effect on the ship. This includes the responsibility to check, repair, and keep the various hull systems in full operating condition.
- Report directly to the OOD on all matters affecting the watertight integrity, stability, or other conditions that affect the safety of the ship.
- Report to the DCA for technical control and matters affecting the administration of the watch. The damage control patrols and the petty officers in charge of repair parties report to the DCS.
- Maintain a written damage control log. The log entries will show the hourly readings of the firemain pressure and the number of fire pumps in operation. Make entries such as the ship's getting underway, anchoring, and mooring. Include special evolutions such as general quarters, emergency drills, and the setting of material conditions, the discrepancies reported, and the corrective action taken.
- Supervise the maintenance of the ship's damage control closure log. List all fittings that are in violation of the prescribed material condition of readiness. All entries are made in ink and no erasures are to be made. All errors are corrected by drawing a line through the error and initialing it; then make the correct entry on the following line. The dates for opening the fitting include the day, month, and year. Keep the closure log sheets on file for a period of 6 months.

  All log entries will include the following information:

  1. Name of the person requesting permission
  2. Rate of the person requesting permission
  3. Type of fitting opened
  4. Identification of the fitting
  5. Classification of the fitting
  6. Time the fitting was opened
  7. Estimated time the fitting is to remain open
  8. Time the fitting was closed
  9. Name of the person granting permission
  10. Rate of the person granting permission

  NOTE

  The estimated time a fitting is open will not be more than 24 hours. At the end of the 24 hours, the fitting will be either logged open again or will be logged closed. Anyone who violates the material condition of readiness in effect without permission to do so will be subject to disciplinary action.

- At the end of each watch, the DCS obtains from the ship's oil king a report on which fuel tanks were emptied during the watch. The DCS lists in the damage control log the compartment numbers of the tanks and whether or not they have been ballasted.
- The DCS reports hourly to the OOD on the status of the ship's watertight integrity.
- When the ship is under way, the DCS has the sounding and security watch take and report

soundings of all voids and cofferdams at least once during each 4-hour watch. While in port, soundings are taken at least once each day. In addition, the DCS has to watch check the material condition of readiness in their respective areas and report any corrective action taken in this respect.

- Ensure that the draft is taken, or computed if at sea, and logged daily on the 0400 to 0800 watch. The draft should be taken daily, before entering or leaving port, before and after fueling, when taking on supplies, or when rearming.
- Notify the OOD, DCA, and weapons department duty officer when the fire alarm board indicates that the temperature of any magazine is above 105°F.
- Ensure that the master key to the repair lockers is issued only to authorized personnel.
- At 1600 daily, request the OOD have the word passed, "All divisions check the setting of material condition YOKE. Make reports to damage control central. " After a half hour, ensure that any division that has not reported does so.

FIRE MARSHALL

The fire marshall is an assistant to the engineer officer and aids the DCA in the training of personnel and the prevention and fighting of fires. The fire marshal must be thoroughly familiar with the following documents:

- *NSTM*, "Gas Free Engineering," chapter 074, volume 3
- *NSTM*, "Practical Damage Control," chapter 079, volume 2
- *NSTM*, "Surface Ship Firefighting," chapter 555, volume 1
- Ship's instructions
- Ship information book
- Ship's plans
- Ship's compartmentation

The fire marshall should conduct daily inspections throughout the ship, paying particular attention to good housekeeping, fire equipment, and fire and safety hazards. The fire marshal reports fire hazards and recommends corrective action. These reports are submitted to the DCA with copies to the XO and appropriate department heads. A follow-up inspection should be made to ensure that corrective action has been taken.

When in port, the fire marshal is responsible for the supervision of the in-port fire party. In this situation, the fire marshal reports directly to the command duty officer.

DIVISION OFFICERS

Division officers are responsible for visual inspections of their spaces, and this officer should take all practicable preventive measures before damage occurs. This requirement includes maintenance of the ship's watertight and airtight integrity, removal of fire hazards, and maintenance of emergency equipment. This is done by making daily inspections of divisional spaces and equipment to verify that they are maintained in the best possible condition. The following publications are helpful to the division officer conducting these checks.

- *NSTM*, "Practical Damage Control," chapter 079, volume 2
- *NSTM*, "Inspections, Tests, Records, and Reports," chapter 090
- *NSTM*, "Lighting Ships," chapter 330
- *NSTM*, "Surface Ship Firefighting," chapter 555, volume 1

DAMAGE CONTROL PETTY OFFICER

A senior petty officer within each division is assigned as the division damage control petty officer (DCPO) for that division. The DCPO is responsible, under the division leading petty officer (LPO), for damage control functions of the division and related matters. Outside normal working hours, duty division section leaders will perform DCPO duties on their duty days.

Each DCPO is responsible for performing and understanding the following eleven duties and responsibilities:

1. Understand all phases of the ship's damage control, fire fighting, and CBR defense procedures.

2. Assist in the instruction of division personnel in damage control, fire fighting, and CBR defense procedures.

3. Ensure the preparation and maintenance of damage control compartment check-off lists for all divisional spaces.

4. Supervise the setting of specified damage control material conditions within divisional spaces and make required reports.

5. Weigh portable CO_2 bottles, inspect and test damage control and fire-fighting equipment, and prepare required reports for approval by the division officer according to current ship's instruction.

6. Ensure that the required battle lanterns, dogging wrenches, spanner wrenches, and other damage control equipment are in place and in a usable condition in all divisional spaces.

7. Ensure that all compartments, piping, cables, and damage control and fire-fighting equipment are properly stenciled or identified by color codes.

8. Ensure the posting of safety precautions and operating instructions in required divisional spaces.

9. Assist the division officer in the inspection of divisional spaces for cleanliness and preservation, and assist in the preparation of required reports.

10. Conduct daily inspections of divisional spaces for the elimination of fire hazards.

11. Perform such other duties with reference to damage control and maintenance of divisional spaces as directed by supervisory personnel.

DAMAGE CONTROLMAN

As a Damage Controlman (DC) you will work with damage control daily. During your daily routine, you will work to prevent fires and flooding while accomplishing your regular job. You will inspect and maintain damage control equipment and systems. When you first start out, you will be assigned to an emergency damage control team. You will be required to familiarize yourself with your ship's systems and all aspects of damage control. Eventually, you will qualify as scene leader for the emergency damage control teams. You will also be expected to help train other personnel in damage control. Although damage control is an ALL-HANDS responsibility, the DC community ensures that damage control readiness is kept at the highest possible level.

REVIEW QUESTIONS

Q6. What person is responsible for damage control?

1. Administrative officer
2. Engineer officer
3. Damage control assistant
4. Damage control is an all-hands responsibility

Q7. What officer is also known as the damage control officer?

1. Administrative officer
2. Engineer officer
3. Damage control assistant
4. Commanding officer

Q8. When logging fittings in the damage control closure log, you may log a fitting open for what maximum amount of time?

1. 10 hours
2. 12 hours
3. 18 hours
4. 24 hours

Q9. What assistant to the engineer officer assists the damage control assistant in providing damage control training for the ship's company?

1. Damage control supervisor
2. Fire marshal
3. Damage control assistant
4. Damage control petty officer

DAMAGE CONTROL ADMINISTRATION

Learning Objective: Recall various damage control administrative programs, directives, and reports.

Provisions have been developed to administer shipboard damage control effectively. These include bills, directives, reports, and programs. These administrative requirements are discussed below.

BILLS AND DIRECTIVES

There are various ship's bills and directives governing the crew's actions under certain circumstances. It may be necessary for you to provide input to your chain of command so that the most qualified personnel are in place for these evolutions.

Battle Bill

The ship's Battle Bill is tailored to your ship for battle organization. You may need to provide information to the operations department when it is updated.

Rescue and Assistance Bill

The Rescue and Assistance Bill organizes qualified personnel by duty section or the entire ship to render emergency assistance outside the ship. Ship's security must be maintained within acceptable standards. The ship's engineer officer shall be responsible for the Rescue and Assistance Bill under the supervision of the executive officer.

Cold Weather Bill

The Cold Weather Bill is used to prepare the ship for cold weather operations. The executive officer is responsible for this bill and shall supervise overall preparation for cold weather deployment.

Toxic Gas Bill

The Toxic Gas Bill specifies the procedures and assigns duties and responsibilities for controlling and minimizing toxic gas casualties. The DCA is responsible for this bill.

Darken Ship Bill

The Darken Ship Bill is used to ensure that all DOG ZEBRA fittings are closed by applicable divisions whenever darken ship is ordered. The DCA shall assign responsibilities to divisions for maintaining and closing DOG ZEBRA fittings. The DCA is responsible for this bill.

Engineering Department Training Records

Training records must be kept to an absolute minimum and need only be maintained to show training has been accomplished and what remains to be done. Training records shall be retained for an individual for as long as he or she is assigned to the unit.

Damage Control Selective Records

There is technical documentation onboard which must be maintained current for the life of the ship. Throughout the life of a ship, there may be major equipment changes or even compartment or system modifications. These changes must be documented in order to assure that other naval activities are aware of these changes and to assure proper support for the systems or equipment involved. Refer to *Fleet Modernization Program Management and Operations Manual* (NAVSEA SL1720-AA-MAN-010) for information on updating these records.

Master Compartment Check-Off List (CCOL)

A Master CCOL is developed for each ship at the time of its construction. CCOLs are provided in each compartment of the ship and provide information on all fittings within the compartment. The DCA maintains a master CCOL book and a backup disk when the CCOL is computerized.

REPORTS

There are three equipment reports used in damage control administration. These reports are the CASREP, CASCOR and DC Equipment Test and Inspection reports.

Casualty Reports (CASREPs)

CASREPs are submitted to report the occurrence of a significant equipment casualty or malfunction which cannot be corrected within 48 hours and which reduces the ship's ability to perform its mission.

Casualty Correction (CASCOR)

A CASCOR is submitted when equipment, which has been the subject of casualty report, is back in operational condition. This report shall be submitted as soon as possible after the casualty has been corrected.

DC Equipment Test and Inspection Reports

The 3-M (Maintenance Material Management) Program requires the testing of damage control equipment and preparation of inspection reports. These actions improve the reliability of systems and equipment through documentation of maintenance information for analysis.

PROGRAMS

There are several programs that support damage control efforts. You may have some responsibility, either directly or as a supervisor, of these programs. The programs you will most likely be involved in are the Quality Assurance (QA) Program (to include inspections, reports, and audits), the Hearing Conservation Program, and the Heat Stress Program.

Quality Assurance (QA) Program

The QA Program is very important to meeting damage control requirements. This program is fully presented in CINCLANTFLT/CINCPACFLTINST 4790. In the following paragraphs we discuss the formal work and the control work packages which you may be often required to compose and complete.

INSPECTIONS AND REPORTS.—A formal work package for the QA Program combines all the applicable requirements for a particular maintenance task. In other words, it provides a plan for getting the job done safely while meeting the technical requirements. This action ensures that the complete scope of work, prerequisites, and preparations are known before starting the job. You document when the work is properly completed and the equipment is properly tested and restored to service.

A controlled work package consists of a formal work procedure and various quality assurance forms. These are used to ensure program compliance. These requirements include work authorization, use of proper material, and that critical specifications are met and required tests are satisfactorily completed.

QA AUDITS.—Audits provide a means of comparing the records of completed jobs to their requirements in order to ensure compliance. There are various types of audits. The two types of audits used by the ship's force are as follows:

1. Vertical Audit. These audits take into account all aspects of a job or task by examining the documentation used to certify or recertify the system/component during and after repairs. They not only track the task from start to finish but also verify the validity of the technical data and the hardware used. These audits may examine any aspect of the task (training and qualification of personnel, technical and production requirements, cleanliness, or material control).

2. Horizontal Audit. These audits are normally conducted on only one specific area or aspect of the QA Program (re-entry control [REC], welding, training, qualification, or testing). They focus on the particular area and do not track a job from start to finish as the vertical audit does.

Hearing Conservation Program

Hearing loss has been and continues to be a source of concern within the Navy. Monitoring of the Hearing Conservation Program is the responsibility of the safety officer. The safety officer's responsibilities include the following:

1. Ensure the program is evaluated for compliance and effectiveness.

2. Maintain a record of noise hazardous areas and equipment and the posting of each.

3. On ships having audiometric testing booths installed, annual certification of the booths and training of the audiometric technicians is required.

Heat Stress Program

The Heat Stress Program establishes Navy policy and procedures for the control of personnel exposure to heat stress. Heat stress is any combination of air temperature, thermal radiation, humidity, airflow, and workload, which may stress the body, as it attempts to regulate body temperature. The safety officer is also responsible for monitoring this program for compliance.

REVIEW QUESTIONS

Q10. The purpose of the Rescue and Assistance Bill is to organize qualified personnel to provide assistance outside the command.

1. True
2. False

Q11. What person is responsible for the Toxic Gas Bill?

1. Administrative officer
2. Engineer officer
3. Damage control party supervisor
4. Damage control assistant

Q12. What report is submitted after an equipment repair that was reported as a CASREP is completed?

1. CASCOR
2. CASCAR
3. CASREP
4. DC equipment report

Q13. What officer monitors the Heat Stress Program for compliance?

1. Administrative officer
2. Engineer officer
3. Safety officer
4. DC equipment report

SUMMARY

You have been introduced to damage control in this chapter. We discussed the responsibilities of individual personnel in a ship's DC organization and sources of information for training. We also covered various administrative programs for which you may have responsibilities. The remainder of this manual will cover the equipment, systems, and procedures used in damage control. Remember, damage control is an ALL-HANDS responsibility. However, the Damage Controlman maintains the majority of the equipment and systems and is recognized by shipmates in other ratings as an expert.

REVIEW ANSWERS

A1. Organization and teamwork are considered the key factors for successful damage control operations. **(1) True**

A2. The basic objectives of shipboard damage control are as follows: take measures to prevent damage, minimize and localize damage as it occurs, accomplish repairs as soon as possible, restore equipment to operation, and care for injured personnel. **(1) True**

A3. What person is normally responsible for requesting quotas to send a repair party to school for training? **(4) Damage control assistant**

A4. What publication contains information (tailored to your ship) on damage control systems, ventilation systems, piping systems, electrical systems, and compartmentation? **(2) Damage control books**

A5. What eight-volume series of books can help you familiarize yourself with your ship's characteristics? **(3) Ship information book**

A6. What person is responsible for damage control? **(4) Damage control is an all-hands responsibility**

A7. What officer is also known as the damage control officer? **(2) Engineer officer**

A8. When logging fittings in the damage control closure log, you may log a fitting open for what maximum amount of time? **(4) 24 hours**

A9. What assistant to the engineer officer assists the damage control assistant in providing damage control training for the ship's company? **(2) Fire marshal**

A10. The purpose of the Rescue and Assistance Bill is to organize qualified personnel to provide assistance outside the command. **(1) True**

A11. What person is responsible for the Toxic Gas Bill? **(4) Damage control assistant**

A12. What report is submitted after an equipment repair that was reported as a CASREP is completed? **(1) CASCOR**

A13. What officer monitors the Heat Stress Program for compliance? **(3) Safety officer**

CHAPTER 2

DAMAGE CONTROL ORGANIZATION, COMMUNICATION, AND INFORMATION

Learning Objectives: Recall the duties and responsibilities of members of repair parties; identify damage control communication system; and recall information pertaining to damage control diagrams and blueprints.

Damage control is vital to all ships in the Navy. If a ship is damaged in battle or by a fire or storm, the damage has to be repaired quickly. Every ship must be organized to accomplish these critical operations. This organization is accomplished through assigned jobs, training, instructions, use of diagrams, and efficient communications. In this chapter, we will discuss the damage control organization, the various means of communications, and the ship's diagrams and blueprints.

DAMAGE CONTROL ORGANIZATION

Learning Objective: Recall the elements of damage control organization and the duties and responsibilities of members of repair parties.

Organization is the key to successful damage control. The damage control organization establishes standard procedures for handling various types of damage. It sets up training for these procedures so that every person will know immediately what to do in each emergency situation.

Damage control has various vital objectives, both preventive and corrective. All personnel must adhere to these objectives. Some of these actions are as follows:

1. Maintain the established material conditions of readiness.
2. Train all personnel in all aspects of shipboard damage control.
3. Maintain damage control systems and equipment in the best condition possible to ensure survivability.

The ship's damage control organization must be coordinated with other elements of the ship's organization to achieve these goals. Therefore, each department must assign specific damage control duties to individuals in each division. This includes the designation of a divisional damage control petty officer (DCPO) and an alternate. The corrective aspect of damage control requires the damage control battle organization to be able to restore the offensive and defensive capabilities of the ship promptly.

The damage control organization consists of two elements—the damage control administrative organization and the damage control battle organization.

ADMINISTRATIVE ORGANIZATION

The damage control administrative organization is part of the engineering department organization. However, each department has major administrative and preventive maintenance responsibilities. These responsibilities include the planned maintenance for damage control equipment, systems, and fixtures within the departmental spaces. Each department head ensures that damage control PMS assignments are completed and that discrepancies are documented and corrected.

BATTLE ORGANIZATION

The damage control battle organization includes damage control central (DCC), various repair parties, and battle dressing stations. The organization varies somewhat from one ship to another. The difference depends upon the size, type, and mission of the ship. However, basic principles apply to all damage control battle organizations. These basic principles are as follows:

1. Ensure that all personnel within the organization are highly trained in all phases of damage control. They should also be trained in the technical aspects of their ratings to assist in the control of damage.

2. Decentralize the organization into self-sufficient units. These units must have communication with each other. They must be able to take corrective action to control the various types of damage.

3. Have one central station, the DCC, receive reports from all damage control units. The DCC

evaluates and initiates those orders necessary for corrective action from a ship-wide point of view. This station also reports to and receives orders from the bridge (command control). These reports concern matters that affect the ship's buoyancy, list, trim, stability, watertight integrity, and chemical, biological, and radiological (CBR) defense measures.

4. Ensure that damage control units assign work that is peculiar to a single department are under the direct supervision of an officer from that department.

5. Provide for relief of personnel engaged in difficult tasks, for battle messing, and for the transition from one condition of readiness to another. Develop procedures to ensure that all relief crews are informed of the overall situation.

6. Provide for positive, accurate, and rapid communications between all damage control units. An overall coordination of effort and direction can then be readily accomplished.

7. Provide for a repair party, remotely located from DCC, to assume the responsibilities of DCC, in the event that DCC becomes a battle casualty.

The battle station for the damage control assistant (DCA) is in DCC. The primary damage control battle organization units, as shown in figure 2-1, are repair parties or teams. Battle dressing stations should be close to the repair parties.

Damage Control Central

Personnel assigned to the DCC are under the supervision of the DCA. These personnel perform the following tasks:

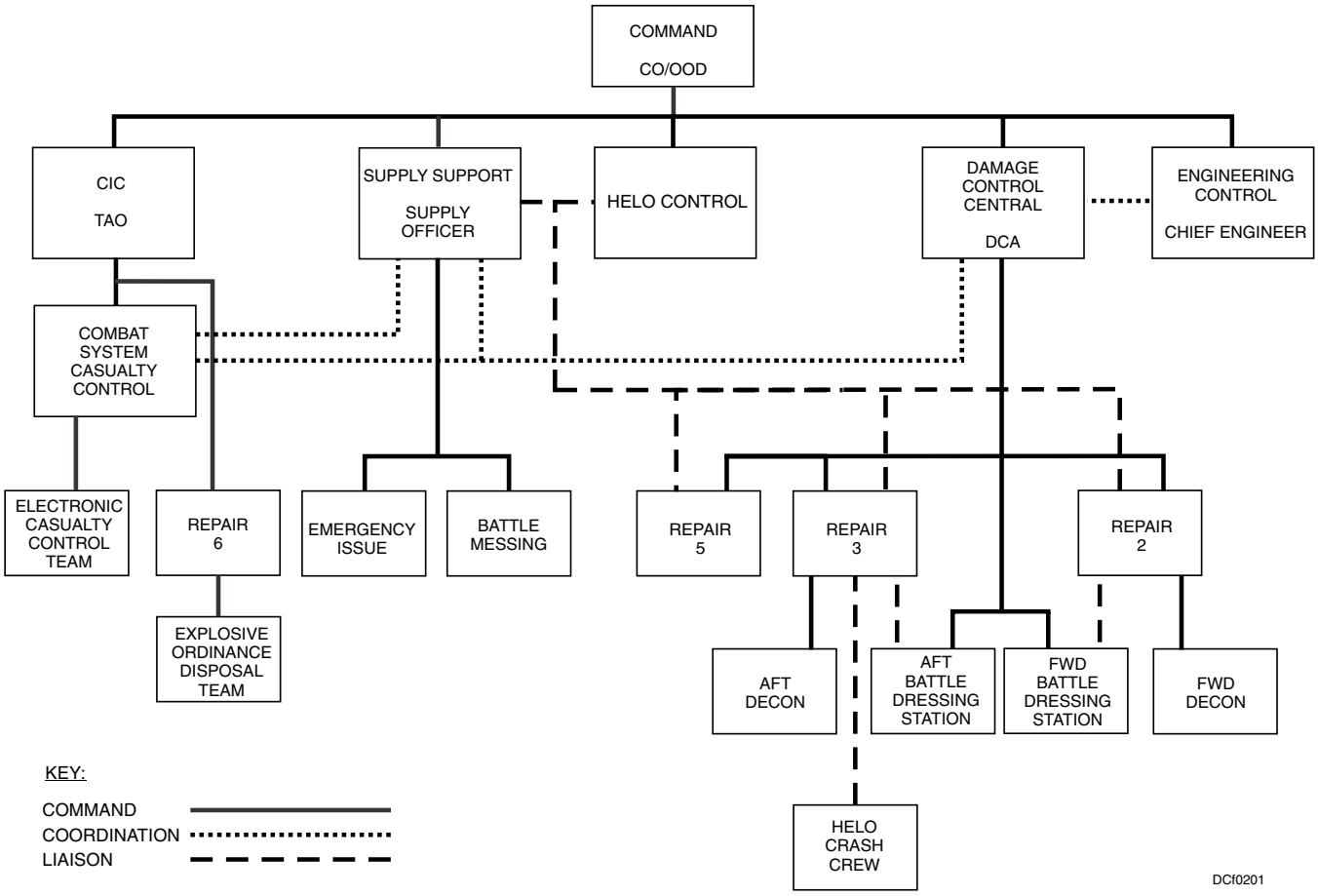

Figure 2-1. Damage control battle organization.

- Receive and evaluate information from all repair parties.

- Inform command control of conditions affecting the material condition of the ship, including buoyancy, list, trim, stability, and watertight integrity.

- Initiate orders to repair parties, as necessary, to direct the control of damage.

- Keep command control informed of such factors as progress in combating damage, fire, and flooding; the effects of CBR attack; and significant personnel casualties. Evaluate the necessity of flooding the magazines that are endangered by fire and recommend corrective action to the commanding officer. Order repair parties to flood the necessary magazines when ordered by the commanding officer.

- Control watertight integrity, flooding, counterflooding, and dewatering.

- Post and label charts and diagrams to show the subdivisions of the ship and its vital piping and electrical systems.

- Post a casualty board in DCC to show the damage sustained by the ship visually and the corrective action in progress. Ensure a simplified schematic is maintained on the bridge for visual reference by command control on the casualty data reported by DCC.

- Post a stability board to show the liquid loading, the location of flooding boundaries, the effect of list and trim caused by flooded compartments, and the corrective action taken with regard to stability. A liquid loading and flooding effects diagram is normally used for this purpose.

- Prepare a list of access routes for ready shelters, deep shelters, electronic casualty control, and battle dressing stations.

- Prepare graphic displays to show what action was taken to correct damage control systems and electrical systems.

- Prepare deck plans to show the areas contaminated by CBR agents; show the locations of, and safe routes to, battle dressing stations and decontamination stations.

- Prepare a closure log to show the state of closure of the ship.

- Prepare a contamination prediction plot.

Repair Parties and Teams

Repair party officers should take charge of activities in their area of responsibility after damage is sustained. They should keep DCC informed of the situation. There are certain repair parties that may be subdivided to provide adequate protection for large areas. Sometimes prescribed responsibilities may be the joint responsibility of two or more repair parties. When repair parties are subdivided, they are designated by the number of the parent party followed by a letter (such as lA, lB). Table 2-1 summarizes the repair parties and teams required by various types of ships.

COMPOSITION.—The composition of the repair parties must permit each party to handle the damage and casualties that occur within their assigned areas. Each ship must designate a repair party as secondary DCC. Also, a complete succession for command of damage control will be promulgated and posted in each repair locker. The physical location of each repair locker, the seniority of each repair locker officer, and the communication facilities available should be considered when succession of command is designated. The following general composition is considered necessary to ensure the effectiveness of the repair parties.

Repair 1 (Main Deck Repair Party).—An officer or chief petty officer from a deck division is in charge. This repair party is made up of deck division petty officers and nonrated personnel—Storekeepers, Information Systems Technician, Electrician's Mates, Hospital Corpsmen, and aviation details (except in aircraft carriers). Some engineering petty officers may also be required.

The hangar deck officer is in charge of Repair 1H, also known as the hangar bays repair party. Repair 1H is a subdivision of Repair 1. An officer or chief petty officer is assigned as an assistant for each hangar bay. Repair 1H is made up of petty officers and nonrated personnel from the aviation ratings. Engineering and deck petty officers may also be required.

Repair 2 (Forward Repair Party).—An appropriately trained officer or chief petty officer is in charge. This repair party is made up of petty officers of the deck and engineering departments—Electrician's Mates, Storekeepers, Hospital Corpsmen, and nonrated personnel.

Table 2-1. Repair Parties and Teams

Repair Party/Team	Type of Ship			
	Aircraft Carrier (See Note 1)	**Cruiser, Destroyer, Frigate**	**Auxiliary and Other Surface Craft over 225 feet**	**Auxiliary and Other Surface Craft less than 225 feet**
Main Deck Repair 1	1F, 1B, 1A		X (See Note 5)	X (See Note 7)
FWD Repair 2	X	X	X	X (See Note 11)
After Repair 3	X	X	X	X (See Note 11)
After Repair 3A			X (See Note 12)	
After Repair 3B			X (See Note 12)	
Amidship Repair 4	X (See Note 2)		X (See Note 6)	
Propulsion Repair 5	X (See Note 2)	X	X (See Note 7)	X (See Note 7)
Ordnance Casualty-Control Team 6	X			
Galley Deck and Island Structure Repair 7	7F, 7B, 7A			
ECCT 8	X (See Note 3)	X (See Note 3)		
Aviation Fuel Repair Team	X		X (See Note 4)	
Crash and Salvage Team	X	X (See Note 4)	X (See Note 4)	
Explosive Ordnance Disposal (EOD)Team	X (See Note 8)		X (See Note 9)	X (See Note 10)
At Sea Fire Party	X	X	X	X
DC Equipment Locker	X (See Note 13)	X (See Note 13)	X (See Note 13)	X (See Note 13)

NOTES:

1. Pertains to CV, CVN, LHA, LHD, and LPH.
2. In certain classes of these ship types, the designation of Repair 5 and Repair 5 as “forward/after propulsion repair” results in more efficient use of personnel.
3. Applies to those types as determined by type commanders and approved by fleet commanders in chief.
4. Applies to ships equipped for manned helicopter operation.
5. Large amphibious ships.
6. Large new construction auxiliaries; includes superstructures.
7. Type commanders may omit Repair 1 and/or in those ships where appropriate.
8. Applies to ships equipped for armed aircraft operations.
9. Applies to AE types.
10. MHC & MCM operations.
11. MHC & MCM only. Supports R&A equipment requirement, equipment prepositioning for major conflagration; does not require manning.
12. LPDs and LSDs shall remain repair lockers IAW type commander instruction to provide full coverage of assigned areas on both sides of vehicle stowage decks and the well deck and allow entry to both sides of main propulsion spaces by fire parties.
13. Supports R&A equipment requirement, equipment prepositioning for major conflagration; does not require manning.

Repair 3 (After Repair Party).—Same as or very similar to Repair 2.

Repair 4 (Amidship Repair Party).—Same as or very similar to Repair 2.

Repair 5 (Propulsion Repair Party).—An engineering department officer is in charge. This repair party is made up of an electrical officer or senior Electrician's Mate and a broad cross section of personnel within the engineering ratings. In the assignment of personnel to Repair 5, emphasis should be placed on fireroom/engine room takeover qualifications instead of on damage control qualifications.

Repair 6 (Ordnance Repair Party).—An officer or chief petty officer of the weapons department is in charge. This repair party is comprised of Gunner's Mates, Fire Control Technicians, and Electrician's Mates. This party may be divided into forward and after subgroups; that is, 6A, 6B.

Repair 7 (Gallery Deck and Island Structure Repair).—This repair party is required on aircraft carriers and may be necessary on other types of ships. An appropriately trained officer is in charge. The party is made up of personnel from the air and engineering departments and can be augmented by personnel from other departments when necessary.

Repair 8 (Electronics Repair Party).—An officer or chief petty officer of the operations department is in charge. This repair party is comprised of Electronics Technicians, Sonar Technicians, Fire Control Technicians, and Electrician's Mates. This repair party works under the supervision of electronics casualty control.

Aviation Fuel Repair Team and Crash and Salvage Team.—These teams are required on aircraft carriers and other ships that are equipped for manned helicopter operations. On aircraft carriers, an officer or chief petty officer of the air department is in charge and this team is made up of air department personnel. On other ships that are equipped for manned helicopter operations, appropriate deck and engineering department personnel are assigned.

Ordnance Disposal Team.—The ordnance disposal team is made up of specially trained personnel deployed aboard ships as required. The team is organized within and administered as a unit of the ship's weapons department. The ordnance disposal team normally operates under the direction of the ship's weapons officer.

GENERAL RESPONSIBILITIES OF REPAIR PARTIES.—The general responsibilities of repair parties demand maintenance of close coordination between the parties. Responsibilities common to all repair parties are as follows:

- Repair electrical and sound-powered telephone circuits.
- Give first aid to injured personnel and then transport them to battle dressing stations without seriously reducing the damage control capabilities of the repair party.
- Detect, identify, and measure dose and dose-rate intensities from radiological involvement.
- Survey areas and personnel; decontaminate those that receive radiological contamination.
- Obtain samples of biological agents to be sent to a laboratory for identification because ships do not have the capability to identify biological agents.
- Identify any chemical agents used.
- Decontaminate areas and personnel affected by biological or chemical attack.
- Control and extinguish all types of fires.
- Evaluate and report correctly the extent of damage in their areas. This responsibility includes maintaining the following:
    1. A graphic display board showing damage and action taken to correct disrupted or damaged systems.
    2. Deck plans showing locations of CBR contamination and locations of, and safe routes to, battle dressing and personnel decontamination stations.
    3. A casualty board for visual display of structural damage.

SPECIFIC RESPONSIBILITIES OF REPAIR PARTIES.—The specific responsibilities of the repair parties are as follows:

- Repair 1, 2, 3, 4, and 5 will maintain the stability and buoyancy of the ship as follows:
    1. Station themselves to reach all parts of the ship while opening a minimum of watertight closures.
    2. Repair damage to structures, closures, or fittings that maintain watertight integrity.

Shore, plug, weld, and caulk the bulkheads and decks; reset valves; and blank or plug lines through watertight subdivisions of the ship.

3. Sound, drain, pump, counterflood, or shift liquids in tanks, voids, or other compartments when necessary. Be familiar with the methods used to transfer liquids from one location to another and the equipment used for that purpose.
4. Maintain two status boards for accurate evaluation of underwater damage. The Stability Status Board (Flooding Effects Diagram) is a visual display of all flooding, flooding boundaries, corrective measures taken, and effects on list and trim. The Liquid Load Status Board shows the current status of all fuel and water tanks and the soundings of each tank in feet and inches.

- Repair 1, 2, 3, and 4 will maintain the ship's structural integrity and maneuverability as follows:

1. Repair primary and auxiliary methods of steering.
2. Clear the upper decks of wreckage that interferes with the operation of the battery, ship, or fire control stations. Clear wreckage that fouls the rudder, propellers, or sides of the ship. Extinguish all types of fires.
3. Maintain and make emergency repairs to battle service systems. These systems include ammunition supply, ventilation supply, high- and low-pressure air lines, communications systems, electrical systems, and cooling water systems.
4. Provide emergency power to vital electrical equipment, using casualty power cables.
5. Assist the crash and salvage team as required.
6. Repair damage above the waterline that could cause flooding in the event of further damage.

- Repair 5 will maintain the ship's propulsion equipment as follows:

1. Maintain and make repairs, or isolate damage, to main propulsion machinery and boilers.
2. Operate, repair, or isolate vital systems. Modify the methods of segregating vital systems when necessary.
3. Assist in the operation and repair of the steering control systems.
4. Assist in the maintenance and repair of communications systems.
5. Assist Repair 1, 2, 3, and 4 and the crash and salvage team when required.

- Repair 6 will protect ordnance and magazines as follows:

1. Make emergency repairs to all ordnance installations, including the supply and renewal of parts.
2. Operate the magazine sprinkler systems and other ordnance systems.
3. Assist other repair parties in extinguishing fires in the vicinity of magazines.
4. Assist other repair parties in making hull damage repairs.
5. Station repair party control at the forward magazine sprinkler control station.
6. Maintain communications with weapons control, DCC, and its own detached units.
7. Isolate those magazines to be sprinkled from others in the same group.
8. Notify DCC of the sprinkling/flooding of magazines. Remember that the magazines are NOT to be flooded unless authorized by the commanding officer.

- Repair 1 and its subdivisions will maintain the main deck and hangar bays in aircraft carriers as follows:

1. Control and extinguish fires.
2. Repair damage in assigned areas.

- Repair 7 will maintain the gallery decks and island structure in aircraft carriers as follows:

1. Control and extinguish fires.
2. Repair damage in assigned areas.

- Repair 8 will maintain electronics equipment on selected ships. On ships with highly complex electronic weapons systems, such as missile ships and large aircraft carriers, Repair 8 will meet its responsibilities as follows:

1. Repair radar, radio, countermeasures, and all associated electronics equipment.
2. Repair fire control equipment.

3. Repair sonar equipment.
4. Extinguish minor electrical fires.

- The aviation fuel repair team will maintain the aviation fuel systems as follows:

1. Operate, maintain, and repair all aviation fuel systems.
2. Extinguish fires.

- The crash and salvage team will maintain the flight deck and hangar deck as follows:

1. Extinguish aircraft fires, rescue pilots promptly, and conduct aircraft salvage operations on the flight deck.
2. Make repairs of all types to the flight deck and associated equipment.
3. Make repairs of all types to the hangar deck and associated equipment.

- The weapons officer is responsible for maintaining protection of exposed ordnance. The air officer is responsible for this function during flight quarters on the flight and hangar decks. The principal assistance for this function comes from the explosive ordnance disposal team that has responsibilities as follows:

1. Remove ordnance from aircraft on fire, or at any time required.
2. Safely jettison ordnance as necessary to prevent damage to the ship.

SPECIAL ORGANIZATION OF REPAIR PARTIES.—Special organization, with regard to stations and responsibilities, is described below for specific types of ships.

- Repair 5 may be split on large ships. Each half of the party is assigned one half of the engineering plant. This arrangement allows for maximum use of manpower and equipment and for greater dispersal of personnel. However, each section of the repair party must be assigned a sufficient number of qualified engineering casualty control and damage control personnel.

The responsibilities of Repair 5 are assigned to the appropriate repair party designated by the type commander on small ships that do not have a Repair 5 (see table 2-1).

- The aviation fuel repair team and the crash and salvage team may be combined in small carriers. They may also be incorporated into existing repair parties on ships equipped for manned helicopter operations.

Battle Dressing Stations

Most ships have a minimum of two battle dressing stations equipped for emergency handling of personnel battle casualties. However, many smaller ships, such as minesweepers, have only one such station. Those ships having two or more battle dressing stations should have the stations well separated from each other. Each battle dressing station must be accessible to the stretcher bearers from repair parties within the vicinity. Medical department personnel as assigned by the senior member of that department should man each battle dressing station. First-aid kits or boxes are available at battle stations as well as battle dressing stations. The medical department furnishes the material for these first-aid kits and boxes.

At-Sea Fire Party

Most surface ships have organized a special fast-response fire party, known as the at-sea fire party. This party is sometimes called the "Flying Squad." It may be a standing organization or part of a special detail organized for special evolutions. These special evolutions include weapons handling, underway replenishment, helicopter operations, and towing operations. The at-sea fire party will carry out the following responsibilities:

- Respond immediately to fire alarms when the ship's repair parties are not manned.
- Extinguish small fires without disrupting other ship operations.
- Control fires until ongoing sensitive critical evolutions can be secured and general quarters (GQ) stations can be manned and ready.

Where appropriate, an at-sea fire party may also perform the duties of a helicopter fire party according to *NAVAIR* 00-80R-14.

The at-sea fire party may be incorporated intact into the GQ damage control organization. It may be a repair party or unit, or it may be composed of members of various repair parties, as manning permits.

The at-sea fire party will respond to all fires at sea, except when the ship is already at GQ. If a fire breaks out and the fire alarm is sounded, immediately followed by the general alarm, the at-sea fire party will continue to respond to the fire. When GQ stations have

been manned, the appropriate repair party will relieve the at-sea fire party at the scene. The DCA is responsible for the organization and training of the at-sea fire party.

The functions and manning requirements for both at-sea and in-port repair parties are shown in figure 2-2.

NUMBER OF PERSONNEL	FUNCTION
1	Repair Party Leader[1]
1	Fire Marshal[2]
1	Scene Leader[9]
1	Team Leader "Attack Team"[3]
2	Nozzleman "Attack Team"
4	Hoseman "Attack Team"[4]
2	Plugman
2	Investigator
4	Boundaryman[8]
2	Messenger/Phone Talker
1	Electrician
1	NFTI Operator[5]*
1	Access*
1	Reflashwatch*
1	Overhaul*
2	Smoke Control*
1	Post Fire Test Assistant*
2	Dewatering*
AsAssigned	First Aid[6]*
4	Rapid Response[7]*

(1) Repair party leader function is required only during Condition I.

(2) Fire marshal function is required in port and at sea during non-Condition I.

(3) The team leader is required when the hose team requires use of the Naval Firefighter's Thermal Imager (NFTI). If the scene leader determines the NFTI is not required, the number 1 nozzleman may assume team leader responsibilities.

(4) Number of hosemen required is based on minimum manning for two 1 1/2-inch hoses. More hosemen may be required based on compartment layout, length of hose run, and size of hose employed.

(5) NFTI operator function may be combined with other functions. At a minimum personnel assigned the function of scene leader, team leader, nozzleman, investigators, electrician, boundaryman, and overhaulman shall be trained in cardiopulmonary resuscitation (CPR).

(6) All personnel assigned shall be trained in performing basic first aid and burn treatment and at least one person should be trained in CPR.

(7) The rapid response team is required in port and at sea during non-Condition I. The team shall be led by the fire marshal. Several of the assigned boundarymen and the electrician may be used to comprise the remainder of this team.

(8) It is recognized that four boundarymen may not be sufficient to set fire boundaries. Additional personnel may be obtained from other sources, i.e., in-port duty section, other repair lockers, non-critical watch stations, etc.

(9) The scene leader will make the decision to employ one or more hoses in the attack of the fire.

Note: * Denotes functions that may be performed by personnel assigned other functions.

Figure 2-2. Functions and manning requirements for repair parties.

In-port Fire Party

The in-port fire party will function as a repair party while the ship is in port. CBR defense operations are not a normal evolution for an in-port fire party. However, this fire party should still be prepared to handle any incident. There is always a possibility of an accident involving a nuclear weapon or a nuclear reactor. Also, civilian chemical plants have had tanks explode, discharging the contents into the atmosphere. But for the most part, the in-port fire party will normally be concerned with fires and flooding.

The duty in-port fire party organization will vary from one ship to another. The number of personnel assigned to this fire party will depend upon the number available in each duty section. Some ships have enough personnel to stand six-section duty and maintain an effective duty in-port fire party. Other ships may be required to remain in a four-section duty status to maintain an effective duty in-port fire party.

No two emergency situations are identical. Therefore, the corrective action taken will vary to some extent. The responsibilities of each member of the fire party will normally remain the same. However, there

are times when a person will have to assume other responsibilities. As an example, the nozzleman is injured while fighting a fire. The hoseman then takes the nozzleman's place. The nozzleman is evacuated from the scene and another person replaces the hoseman. The responsibilities of some personnel remain the same for fires, collisions, and flooding. However, you do not need a fire fighter in a compartment that is completely flooded. So the assignments of the nozzlemen, hosemen, and some other personnel will change to accommodate the emergency situation at hand.

The following information is a brief description of the responsibilities and requirements of various key fire party personnel. The equipment mentioned in this section will be discussed in more detail later in this nonresident training course (NRTC).

FIRE MARSHAL.—When there is a fire the fire marshal shall proceed directly to the scene of the fire to direct efforts of the rapid response team. If the fire is beyond rapid-response team capabilities, the fire marshal shall turn duties over to the scene leader and assume other duties as directed. These duties may include:

- Being repair party leader.
- Supervising the establishment and maintenance of communications.
- Posting of boundaries.
- Providing direct logistic support. The fire marshal must assume a "big picture" role upon being relieved by the scene leader providing particular attention to the potential for vertical fire spread. The fire marshal will make recommendations for additional personnel or GQ as required by the magnitude of the casualty.

ON-SCENE LEADER.—The on-scene leader is the person in charge at the scene. When a fire is "called away," the scene leader will proceed immediately to the scene after donning proper protection, equipped to assume control of the fire party. The scene leader will receive reports from team leader and investigators and pass on those reports, as required. The scene leader shall:

1. Wear an oxygen breathing apparatus (OBA) equipped with voice amplifier where available.
2. Immediately assess extent of fire.
3. Determine the firefighting agent to be used.
4. Determine the method and direction of attack.
5. Be positioned where best able to control the fire party.
6. Establish communications as required using best means. Wire-free communication (WIFCOM), where available.
7. Determine the protective clothing requirement for the fire party, based on assessment of conditions found.

TEAM LEADER.—As the team leader, you will direct the efforts of attack teams to extinguish or overhaul a fire. You must know the layout of the affected space, and be aware of any hazards. You will direct personnel while using the Naval Firefighter's Thermal Imager (NFTI). Conditions within the space will include reduced visibility; sometimes there will be no lighting and often there will be smoke or steam. You will direct nozzlemen and hosemen around hazards, following specific routes to reach the source of the fire. Once the fire is extinguished, you will use the NFTI to observe for hot spots and to complete overhaul of the space. You will relay reports of conditions by word of mouth to the on-scene leader.

INVESTIGATOR.—Investigators are assigned to repair lockers to ensure that no further damage occurs outside the boundaries of the existing casualty. Investigators normally operate in pairs, travel assigned routes, and report conditions to the repair locker. As an investigator, you will ensure that the boundaries around the casualty are maintained, and that further damage is not occurring. It may be necessary for you to access locked spaces to ensure their integrity, and you will carry tools to open these spaces. You must have an in-depth knowledge of the ship's layout and the systems that are in your assigned area. To qualify as an investigator, you must complete the required PQS.

NOZZLEMAN.—As the nozzleman, you will man the attack hose nozzle. You will be directed by the team leader through the compartment to extinguish the fire. For your protection, you will be required to wear an OBA. Once the fire is extinguished and a reflash watch is established, you may be involved in the overhaul of the space. You may be involved in conducting atmospheric tests, desmoke the compartment, and further investigations for damage. When conducting atmospheric tests, the accessman will check the space for the percentage of oxygen content and the presence of explosive and toxic gases. You should be qualified in first aid, the operation of all fire-fighting equipment, and the procedures for overhauling a fire.

HOSEMAN.—As a hoseman, you will have several duties. You will wear an OBA. You will run the attack hose from the fireplug to the scene, and you will keep the hose from getting fouled while fighting the fire. The nozzleman will be able to handle the hose and nozzle better if you keep the weight and tension of the hose off the nozzleman. Your other duties include the relaying of spoken messages and orders between the on-scene leader and the nozzleman. You will assume the duties of the reflash watch when directed to do so. After the fire is out, overhauled, and the space is safe to enter, you will help clean up the compartment. In the event of a collision or flooding, you will be on the shoring detail. There you will reinforce weakened bulkheads, brace warped watertight closures, and patch holes in bulkheads and piping. Shoring, plugging, and patching procedures will be discussed in a later chapter.

PLUGMAN.—As the plugman, you will connect the hose to the fireplug. When directed to do so and while the nozzle is closed, open the fireplug valve to activate the hose. You will need to keep an eye on the hose for loss of water pressure or a hose rupture. In the event of loss of water pressure, make a report to the on-scene leader and secure the plug. In the event of a ruptured fire hose, secure the fireplug, replace the ruptured section of hose, and reactivate the hose as quickly as possible. You may be involved in rigging a jumper hose or in setting up portable pumps.

ELECTRICIAN.—When there is fire or flooding, the repair party electrician will immediately secure electrical power to all compartments that are affected by the casualty. The electrician will report to the on-scene leader when the electrical power is secured. The electrician is responsible for the plugging in, energizing, and de-energizing of the electrical submersible pumps, and any other electrical equipment required. Other members of the fire party may set up the equipment for use; however, they are not to plug in, energize, or de-energize the equipment. Once the casualty is corrected, the electrician will investigate the compartments for electrical damage when directed to do so by the on-scene leader. The electrician will complete repairs to vital electrical systems as soon as possible. Repairs to nonvital electrical systems will be completed as time allows.

ACCESSMAN.—If you are assigned as the accessman you will open doors, hatches, and clear routes as necessary to provide access to the fire when directed by the scene leader. You may use forcible entry equipment such as dogging wrenches, pry bars, bolt cutters, or exothermic torch.

When the hose teams are ready to enter a space, you will open the door, hatch, or scuttle. There are times when you have to clear a route so that the fire party can gain access to the fire. If the space is locked, you will have to decide which forcible-entry tools to use. Once entry has been made, you will stand by to assist where needed until the on-scene leader gives orders to otherwise.

STRETCHER-BEARER.—If you are assigned as a stretcher-bearer, you will be required to take the repair locker first-aid kit, or box, to or near the scene. If medical department personnel are available, you will help them in administering first aid, as required. In the absence of medical department personnel, you will render basic first aid and then assist in the evacuation of injured personnel to battle dressing stations.

FIRE BOUNDARYMEN.— Fire boundarymen proceed directly to the scene when a fire is called away and set primary and secondary fire boundaries as directed by the repair party leader or fire marshal. They secure all doors, hatches, and openings in the boundary of the fire area. They remove or relocate combustibles as required. They cool boundaries with hoses as required. They are normally monitored by and report to the roving investigators.

When acting as setter during a fire, you will need a means to keep the bulkheads and decks cool. A fire hose is normally used if available. Otherwise, you may use a bucket of water and a swab.

In the case of flooding, the first set of watertight transverse bulkheads forward and aft of the flooded compartment is used as the flooding boundaries. While acting as boundary setter during flooding, you will have to keep a watchful eye on the situation. If a closure or seam begins to leak or if the bulkhead starts panting, report it to the on-scene leader.

AFFF STATION OPERATOR.—The aqueous film-forming foam (AFFF) station operator ensures that there is a constant supply of AFFF to the hose team for fire fighting. You must be knowledgeable in the operation of your ship's AFFF system, and you will refill the AFFF tank as necessary. To qualify as an AFFF station operator, you must complete the required PQS.

PHONE TALKER.—If you are assigned as a phone talker, you will report to DCC, the repair locker, or other stations such as the bridge. You will man the phone between your supervisor at your location and other stations. You will receive messages from other phone talkers and relay them to your supervisor.

MESSENGER.—If you are assigned as a messenger, you will be responsible for carrying messages between the scene of the casualty and the repair locker. You will need to be thoroughly familiar with your ship and know how to get from one place to another. You are to stay near the on-scene leader at all times except when you are taking a message to the repair locker. When carrying a message from one point to another, you do so quickly because the leader may have another message ready for you when you return.

REVIEW QUESTIONS

Q1. The two elements of the damage control organization are the damage control administrative organization and the damage control battle organization.

1. True
2. False

Q2. The three objectives of damage control are as follows: (1) Maintain the established material conditions of readiness; (2) train all personnel in all aspects of shipboard damage control; (3) maintain damage control systems and equipment in the best condition possible to ensure survivability.

1. True
2. False

Q3. What damage control station receives reports from all others and coordinates their actions?

1. Repair station 1
2. Fire marshal station
3. Damage control central
4. Repair station 4

Q4. The three responsibilities of the at-sea fire party are as follows: (1) Respond immediately to fire alarms when the ship's repair parties are not manned; (2) extinguish small fires without disrupting other ship operations; (3) control fires until ongoing sensitive critical evolutions can be secured and GQ stations can be manned and ready.

1. True
2. False

Q5. What person is in charge of the fire party at the emergency scene and directs the efforts of the fire party to combat the emergency situation?

1. The LCPO
2. The on-scene leader
3. The repair party supervisor
4. The damage control assistant

Q6. Investigators normally operate in pairs,travel assigned routes, and report conditions to the repair locker.

1. True
2. False

DAMAGE CONTROL COMMUNICATIONS

Learning Objective: Identify the damage control communication systems and recall the purpose of each.

Damage control communications are vital to a ship's survival during emergency conditions. Each repair party is required to keep DCC informed of the damage status within its area. At the same time, each repair party needs to monitor the reports from all the other repair parties. By monitoring these reports, each repair party will be able to assume the duties of DCC if DCC becomes a battle casualty. If adequate damage control communications are not maintained, the entire damage control organization could break down rapidly and fail to perform its primary responsibilities.

The following communication methods may be used for damage control communications:

1. Sound-powered battle telephone circuits
2. Two-way intercoms
3. Ship's service telephones
4. Ship's general announcing system
5. Integrated voice communications system
6. Voice tubes
7. Messengers
8. WIFCOM (wire-free communication)

As a Damage Controlman, you must be familiar with the communication systems used by the damage control organization on your own ship. Detailed

information on communications can be found in the Ship Information Book for your ship. Various communication methods will be discussed in this chapter. However, the information given here must be regarded as general in nature; it does not apply to all types of ships.

BATTLE TELEPHONE CIRCUITS

The battle telephone circuits are sound-powered circuits. Therefore, they require no outside source of electrical power. The transmitter of a sound-powered telephone transforms sound waves into electrical energy. The receiver transforms this electrical energy back into corresponding sound waves.

Each sound-powered circuit provides communication between certain designated stations. Each circuit consists of telephone jack outlets connected by a line or lines. The connection may be direct or it may be through intermediate equipment such as switchboards, switch boxes, or transfer switches. Some of the vital circuits can be cross-connected with other circuits.

The sound-powered battle telephone system is made up of five types of circuits—primary, auxiliary, supplementary, emergency, and miscellaneous. Sound-powered telephones are also classified according to the type of control as follows:

1. Switchboard-type circuits are controlled from a switchboard at a central location.
2. Switch box-type circuits are controlled from a switch box located at the station exercising operational control over the circuit.
3. String-type circuits have all stations connected in parallel, with no switching provided.

The primary, auxiliary, and supplementary circuits of the ship's battle telephone system are permanently installed. These circuits have outlets located at numerous critical locations throughout the ship. The emergency circuits are string-type circuits, which have permanently installed jack boxes. These "salt-and-pepper lines" are stored on a reel and are strung from a sound-powered jack box to the location of the casualty.

Primary Circuits

The number of primary circuits used within the sound-powered battle telephone system varies among ships. The size and type of your ship normally determines the choice of circuits. The primary circuits discussed here are normally found on large combatant ships. Not all of these circuits are found on smaller ships. The circuits discussed here include only those that are of particular importance in damage control communications.

CIRCUIT 2JZ is the damage and stability control circuit. This circuit provides vital communication between DCC, engine rooms, repair stations, weapons control center, and other critical stations. Each repair party circuit has an outlet in DCC. These circuits may connect through selector switches, individual jack boxes, or a combination of both. The latter arrangement is preferred because it permits the manning of each circuit by individual phone talkers. When the combination of the selector switch and individual jack boxes is used, the 2JZ circuit is preferably used as an outgoing circuit. Information and orders from DCC are passed to the repair parties. Each individual repair party circuit thus becomes an incoming circuit into DCC. Therefore, the DCA either receives information or orders action to be taken on any message carried over any individual repair party circuit.

When individual repair party circuits come into DCC only through a selector switch or when individual phone talkers are not available, the system must be reversed so that the 2JZ circuit becomes the incoming channel for information. The individual repair party circuits receive only such information or orders from DCC that is intended specifically for them. This may prevent repair party officers from receiving all of the information being sent to other repair parties.

In smaller ships, only a single circuit may be available. In this situation, both incoming and outgoing messages must be handled over it. It is also possible that this circuit will not be primarily or entirely a damage control circuit. The major controlling station must establish control of this circuit. This will ensure an orderly flow of communication. The circuit must never be allowed to get out of control as a result of cross-talk when more than one station assumes priority. The controlling station must be able to clear the circuit immediately and establish priorities for messages whenever the need arises.

CIRCUIT 3JZ provides communication between Repair 1 and DCC, secondary DCC, topside battle dressing station, and each unit patrol station associated with Repair 1.

CIRCUIT 4JZ provides communication between Repair 2 and DCC, secondary DCC, forward battle dressing station, each unit patrol station forward of engineering compartments, fire pump controllers

(except aircraft carriers), and fog-foam injection stations (aircraft carriers only).

CIRCUIT 5JZ provides communication between Repair 3 and DCC, secondary DCC, after battle dressing station, each unit patrol station associated with Repair 3, remote-operated valve control stations aft of the engineering compartments, fire pump controllers (except aircraft carriers), and fog-foam injection stations (aircraft carriers only).

CIRCUIT 6JZ provides communication between Repair 4 and DCC, secondary DCC, amidship battle dressing station, each unit patrol station associated with Repair 4, remote-operated valve control stations amidship, fire pump controllers (except on aircraft carriers), and fog-foam injection stations (aircraft carriers only).

CIRCUIT 7JZ provides communication between Repair 5 and DCC, secondary DCC, engine rooms, firerooms, and each unit patrol station associated with Repair 5.

CIRCUIT 8JZ provides communication between Repair 8 and DCC, secondary DCC, primary and secondary fly control, auxiliary fly control, and each unit patrol station associated with Repair 8.

CIRCUIT 9JZ provides communication between forward Repair 6F and DCC, secondary DCC, gunnery control station, remote sprinkling control station, and each manual sprinkling valve control unit.

CIRCUIT 10JZ provides communication between after Repair 6F and DCC, secondary DCC, gunnery control station, remote sprinkling control stations, and each manual sprinkling valve control unit.

CIRCUIT 12JZ provides communication for the operating orders for fire pump control and the maintenance of firemain pressure in the event of damage. Communication facilities are provided between such stations as DCC, secondary DCC, each conflagration station and hangar deck lighting control station, and the controllers for each fire pump.

CIRCUIT JA is the captain's battle circuit. This circuit provides communication between such stations as the open bridge, pilot house, captain plot, secondary corm, combat information center (CIC), gunnery control stations, antiaircraft stations, weapons control center, fire control plotting rooms, DCC, secondary DCC, and flag plotting station.

Auxiliary Circuits

Most ships have auxiliary circuits, which duplicate primary circuits. The wiring for the auxiliary circuits is installed as far away as possible from the wiring for the primary circuits. This helps to minimize the danger of both the primary and the auxiliary circuits being placed out of commission at the same time. An X in front of the circuit designator identifies auxiliary sound-powered circuits. Examples of auxiliary circuits are X2JZ and X1JV.

Supplementary Circuits

Supplementary circuits are primary circuits as related to their principal functions. However, when the circuit is also used for damage control communications, the circuit is considered as a supplementary circuit. The following primary circuits are examples of supplementary circuits when they are used for damage control purposes.

CIRCUIT 3JG provides communication between such stations as primary and secondary fly control, flight and hangar deck control stations, each aviation lubricating oil station on the hangar and the gallery deck walkway, flight deck crew shelters, and the lubricating oil pump controllers.

CIRCUIT 4JG provides communication for the supervision of the various elements of the high-capacity aviation gasoline and JP5 system. Communication facilities are provided between such stations as flight deck control station, DCC, secondary DCC, forward and after gasoline pump and control rooms (or gasoline control rooms), and aviation gasoline filling stations.

CIRCUIT 1JV is the maneuvering and docking circuit. This circuit provides communication between the pilot house, open bridge, secondary conn, DCC, engine rooms, emergency stations, steering gear rooms, gyro rooms, standard compass, fog watch forward and aft, and each line handling and transfer-at-sea station.

CIRCUIT 2JV is the engineering circuit for main engines. This circuit provides communication between DCC, each propulsion engine throttle station, auxiliary machinery room, refrigerating machinery room, air-conditioning machinery room, each shaft alley, and Repair 5.

CIRCUIT 3JV is the engineering circuit for boilers. This circuit provides communication between each boiler operating station, each main feed pump and

feed booster pump, smoke watch, DCC, control engine room, auxiliary control engine room, and Repair 5.

CIRCUIT 4JV is the engineering circuit for fuel and stability. This circuit provides communication between DCC, the oil king, controls the engine room, secondary DCC, Repair 5, fuel oil transfer pumps, fuel oil manifolds, and sounding tubes.

CIRCUIT 5JV is an engineering circuit that provides communication between each ship's service power switchgear group, each load center switchboard, each emergency power switchboard, each IC/gyro room, each turret power transfer panel, DCC, secondary DCC, Repair 5, and steering gear room.

CIRCUIT JL is for surface and sky lookouts. The circuit is used primarily to pass reports from lookouts to the captain, gunnery officer, and CIC. Because of the location of the lookouts topside, they can help locate damage caused by high-angle shellfire and bombs.

Emergency Circuits

Emergency circuits are used to provide a means of reestablishing communications once a casualty has occurred to the primary lines. The emergency sound-powered circuit of main concern to damage control personnel is the X40J casualty control communication circuit. The X40J circuit provides portable emergency communications between the main below-deck stations after casualties have occurred to the primary circuits. Portable leads are used for communication between the outlets that are permanently connected to the below-deck stations forming this emergency circuitry. The below-deck stations are usually located in the firerooms, engine rooms, forward and aft IC rooms, emergency generator rooms, DCC, and steering gear rooms. These stations have individual single-gang jack boxes. These boxes are permanently installed and connected to individual four-gang jack boxes above decks. The four-gang outlets are wired in parallel but are not interconnected.

Repair party lockers are equipped with portable jack boxes and two-conductor twisted cable. These are commonly referred to as salt-and-pepper rigs. The salt-and-pepper rigs may be used to connect the individual X40J circuits to operating primary or auxiliary circuits or directly to the bridge.

Miscellaneous Circuits

There are several miscellaneous circuits that provide for the transmission of information of direct interest to damage control stations. These circuits include the flooding alarm (FD), remote draft indicator (DG), and security alarm (FZ) circuits. Not all of the miscellaneous circuits transmit verbal messages. Some of the circuits are used for alarms that have a definite meaning. You will become acquainted with most of the miscellaneous circuits aboard ship while performing your daily duties.

INTERCOM UNITS

Intercom units (circuit 4MC) provide fast and dependable two-way communication between DCC and each repair party locker. Using extra speakers at various places can provide one-way communication from each repair party locker to its unit patrol stations.

SHIP'S SERVICE TELEPHONES

Many ships use ship's service telephones for damage control communications when there are telephones installed at or near repair party lockers. The ship's service telephones are standard telephones. They may be either rotary-dial or push button. The majority of the compartments aboard ship will have a telephone installed within them. However, do not depend too much on this system. It is not part of a rugged battle system, and it could easily be knocked out of commission early during battle action.

SHIP'S GENERAL ANNOUNCING SYSTEM (1MC CIRCUIT)

The circuit that will affect you the most is the general announcing system circuit identified as 1MC. The 1MC is used to pass information to the ship's crew on a regular basis each day. It is also another means of damage control communication because information can be passed throughout the ship.

The 1MC system should be used only to pass warnings or vital information that affects the entire ship's company. When information does not affect the entire ship and other communication methods are available, the 1MC should NOT be used.

MESSAGE BLANKS

A written message is another means of passing information within the damage control organization. To standardize this method of communication, you should use preprinted message blanks (fig. 2-3). To write out a message word for word takes unnecessary time. Therefore, to expedite message preparation, you should use damage control standard abbreviations (fig. 2-4) and damage control standard symbology (fig. 2-5). A detailed listing of damage control standard symbology is provided in Appendix III of this NRTC.

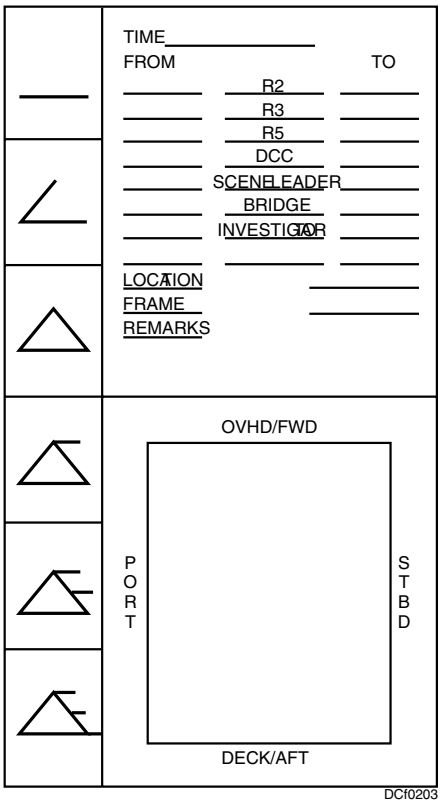

Figure 2-3. Preprinted message blank.

AD	Armored Door
AH	Armored Scuttle
AQUES	Armored Quick-Acting Escape
AP	Air Ports
ATC	Air Test Cap
BP	Battle Port
CP	Casualty Power
CPPT	Casualty Power Passing Tube
COV	Cut Out Valve
DDV	Deck Drain Valve
DS ( ) *	Deck Socket (List: i.e. Reach Rod) *
DV	Drain Valve
FLWV	Flushing Water Valve
FMCOV	Firemain Cutout Valve
FMRV	Firemain Riser Valve
FMV	Firemain Valve
FPL	Fire Plug
FTD	Fire Tight Door
FWV	Fresh Water Valve
FZD	Fire Zone Door
NTD	Non-Tight Door
OBDV	Overboard Drain Valve
PS	Passing Scuttle
QAWTD	Quick-Acting Watertight Door
WTH	Watertight Hatch

Figure 2-4. Sample list of standard abbreviations for damage control fittings.

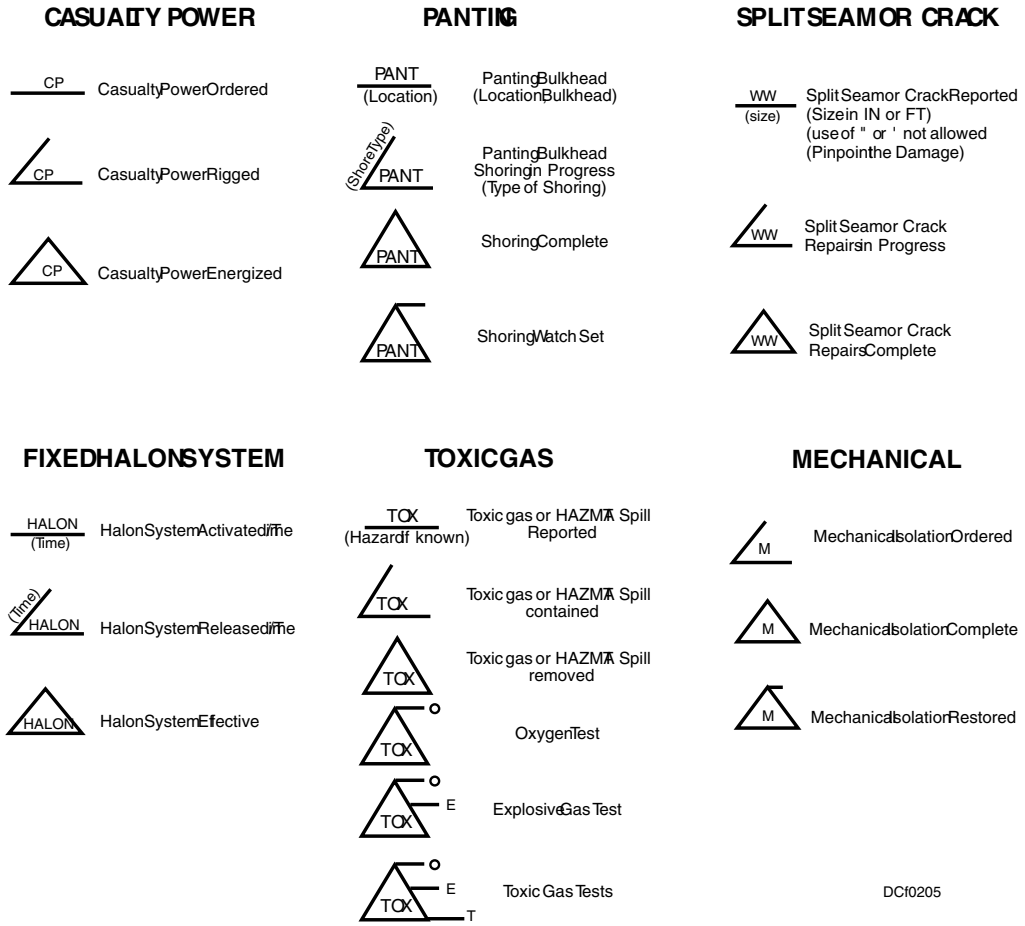

Figure 2-5. Samples of Navy standard damage control symbology.

MESSENGER

The messenger's responsibility is to relay orders and information. These messages will normally be relayed between the scene, the repair locker, and, if in port, the quarterdeck. Written messages are always more reliable than oral messages. However, the messenger should be trained to relay oral messages without errors.

MAINTAINING COMMUNICATIONS

If you are a member of a repair party, you should understand and be able to use all of the available methods of communication. This includes the ability to switch from normal to alternative methods when necessary. Damage control communication drills should be held frequently; some circuits should actually be shorted without warning to test your ability to maintain communications during an emergency situation.

The succession of command for repair stations must be well established if you are to maintain communications control. The proper succession should be put into effect immediately if DCC is destroyed or otherwise put out of commission. The sequence of command for each ship is given in the ship's Repair Party Manual, and posted in each repair locker.

Drills are useful in establishing the chain of succession. DCC may pretend to be out of commission by not answering up. This will provide a test of the organization and the procedures of the repair party station designated to assume command. The repair party taking control should notify all other repair parties, the commanding officer, and main engine control that it has control. This procedure should be followed until all repair parties have succeeded to control and have exercised their control properly. DCC can always regain control by saying "Damage control central taking control," and receiving the proper acknowledgments.

This drill should emphasize the necessity for all repair parties to maintain a record of all information and orders issued by DCC. When a repair party succeeds to DCC, it must know what casualties the other stations are handling.

Communication difficulties become apparent when there are numerous hits or other casualties throughout the ship. Under these conditions, all repair parties usually try to send information to DCC at the same time. The communication circuits can become overloaded and jammed unless proper control is maintained. A priority system for different types of messages should be established. All repair party personnel should understand the priority of messages. Messages containing vital information and messages that require immediate action by some other damage control unit should be sent first. Then other important messages or reports should be sent. Routine or relatively unimportant messages should not be transmitted until the lines are free.

TRANSMITTING INFORMATION

Repair party personnel at the scene of the damage are obviously in the best position to provide accurate information on the casualty. However, the entire damage control organization can break down if repair party personnel do not know how to transmit information correctly.

The initial report from a repair party should contain the location and the nature of the damage. Subsequent reports should contain information of the extent of the damage, the measures being taken to correct the damage, and assistance required (if any). These general guidelines for transmitting information from repair parties to DCC apply to both oral reports and written messages.

As an example, consider the following series of reports. These reports concern an exercise for a fire in a living compartment resulting from a bomb or shell hit. The ship is at GQ. These reports are set up as message blank reports. However, the same information would be required if you were making oral reports over a damage control communication circuit.

The first message blank (fig. 2-6) is from Repair 3 to DCC. The message is written WTD 2-130-2 H/J. This means that watertight door 2-130-2 is hot and jammed.

The second report from Repair 3 to DCC is IN PROGRESS, as shown in figure 2-7. This means that corrective action is being taken to cool and unjam the watertight door so it can be opened.

The third report from Repair 3 to DCC is WTD 2-130-2 C/U (cooled and unjammed), as shown in figure 2-8.

The fourth report from Repair 3 to DCC is CLASS ALFA FIRE, COMPARTMENT 2-130-2-L, as shown in figure 2-9.

The fifth report from Repair 3 to DCC is CLASS ALFA FIRE CONTAINED, COMPARTMENT 2-130-2-L, as shown in figure 2-10.

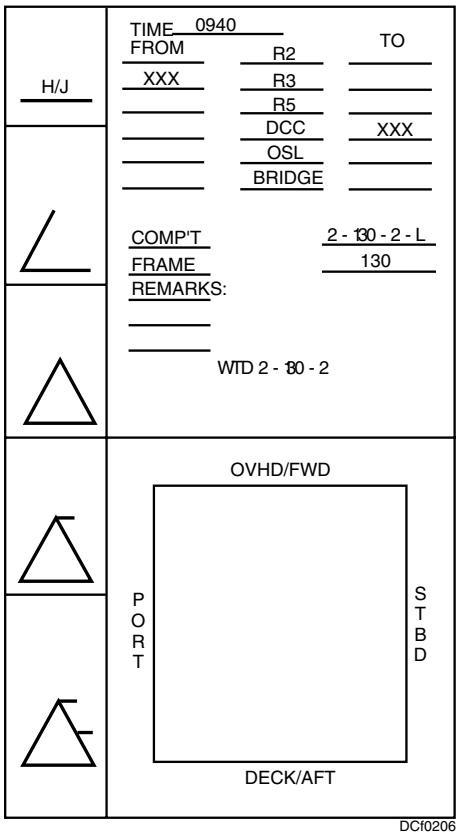

Figure 2-6. Sample message of the first report.

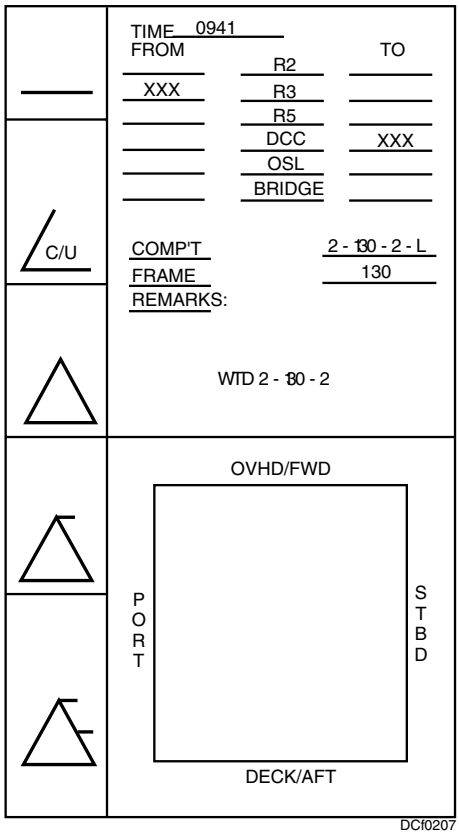

Figure 2-7. Sample message of the second report.

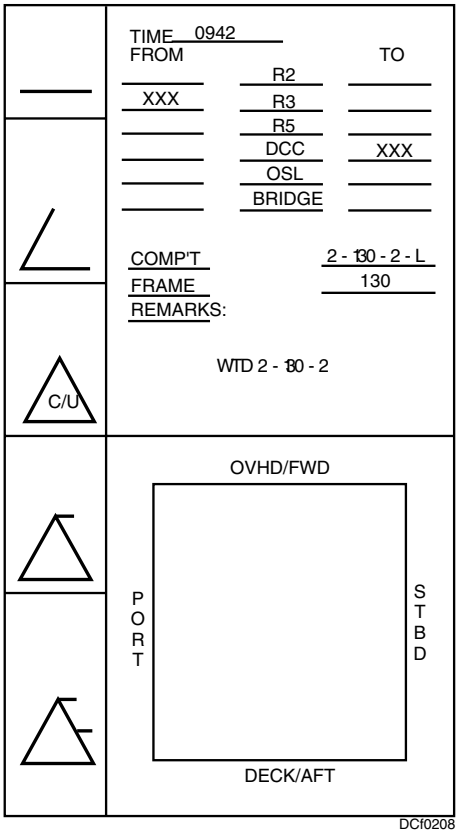

Figure 2-8. Sample message of the third report.

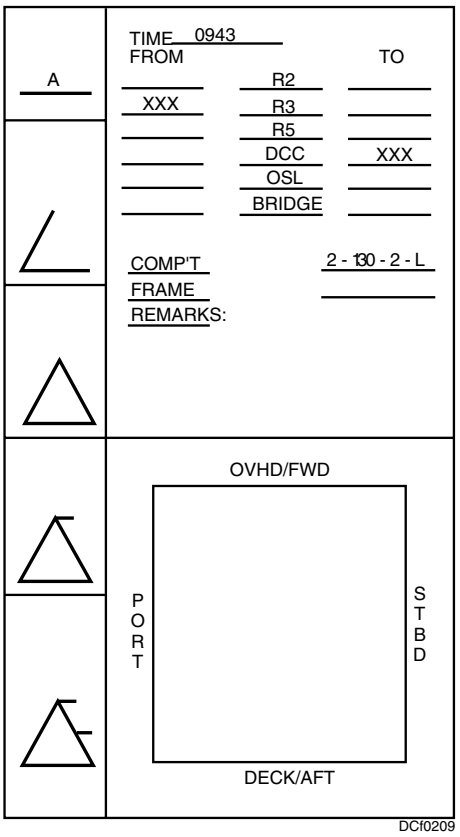

Figure 2-9. Sample message of the fourth report.

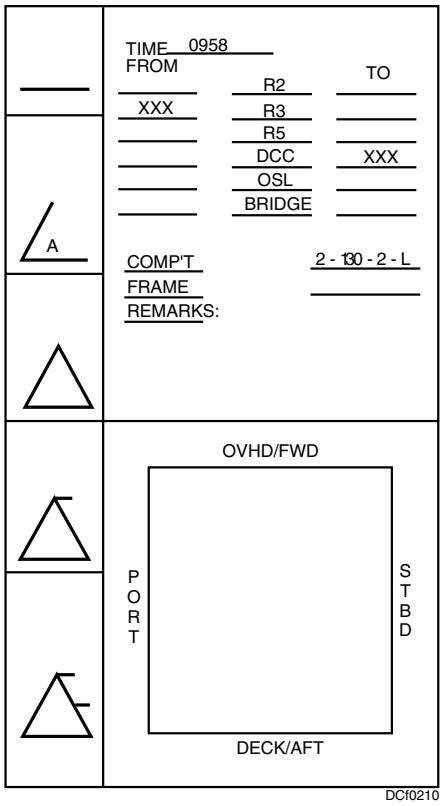

Figure 2-10. Sample message of the fifth report.

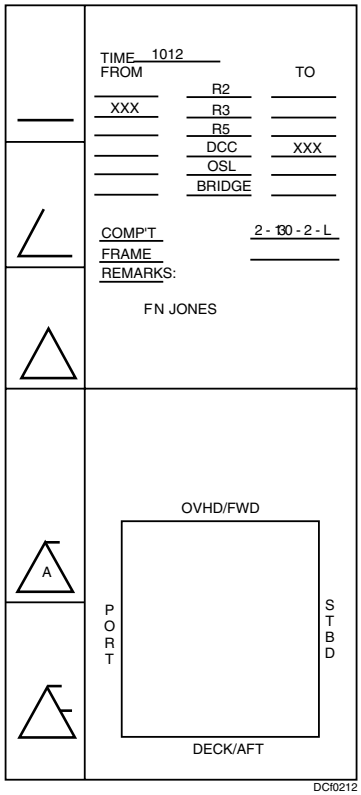

Figure 2-12. Sample message of the seventh report.

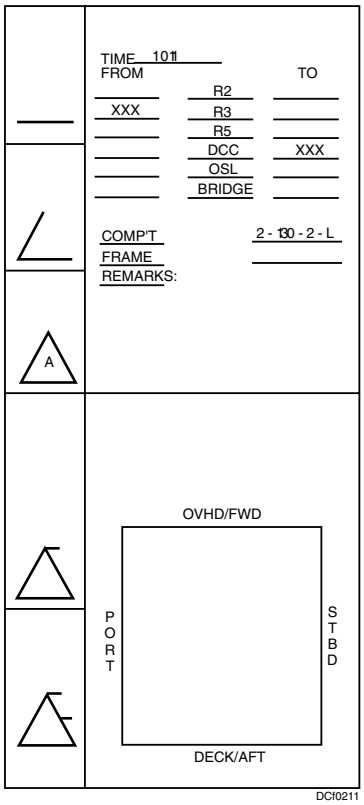

Figure 2-11. Sample message of the sixth report.

The sixth report from Repair 3 to DCC is CLASS ALFA FIRE OUT, COMPARTMENT 2-130-2-L, as shown in figure 2-11.

The seventh report from Repair 3 to DCC is REFLASH WATCH SET BY FN JONES, COMPARTMENT 2-130-2-L, as shown in figure 2-12.

The eighth report (fig. 2-13) from Repair 3 to DCC is that compartment atmospheric tests show sufficient oxygen and no explosive gases present in COMPARTMENT 2-130-2-L. There must be sufficient oxygen and no explosive or toxic gases present before you may remove your OBA.

Additional reports may be required, such as personnel casualties, electrical damage, investigation of surrounding areas, desmoking, dewatering, ruptured firemains, shoring, and compartment overhaul. In all reports, pinpoint the damage as acurately as possible. This gives DCC a clearer picture of the damage. For example, don't just say, HOLE IN COMPARTMENT 2-107-1-L. Instead, say COMPARTMENT 2-107-1-L, FRAME 112, 8-INCH HOLE, STARBOARD SIDE, 4 FEET OFF DECK, as shown in figure 2-14. Specific messages like this give DCC an exact picture of the damage.

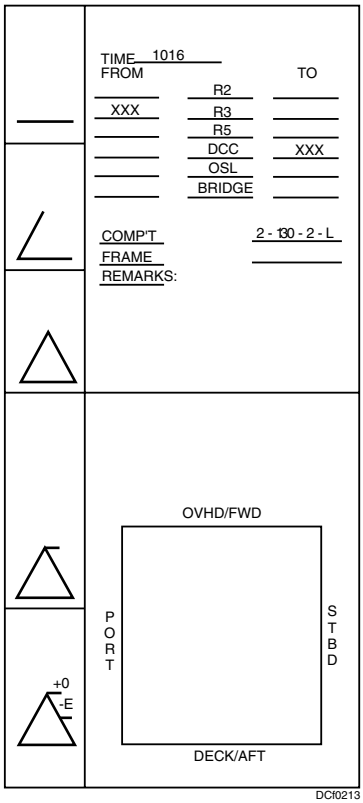

Figure 2-13. Sample message of the eighth report.

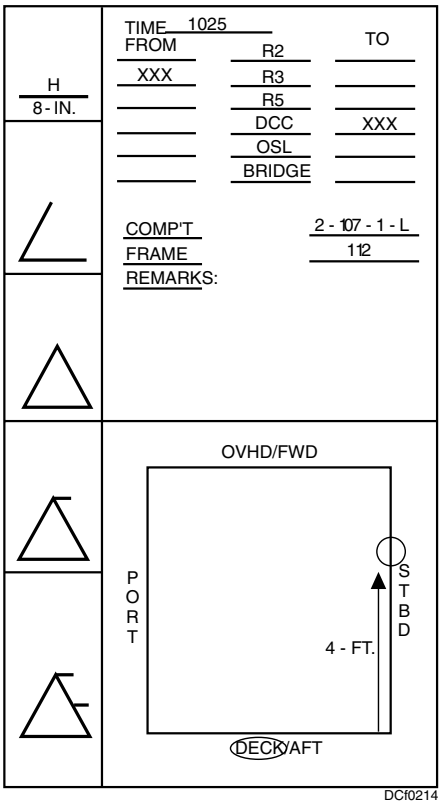

Figure 2-14. Sample message to report the size and location of a hole.

REVIEW QUESTIONS

Q7. Each repair party will be able to assume the duties of DCC if DCC becomes a battle casualty by monitoring ALL casualty reports.

1. True
2. False

Q8. Battle telephone systems include primary, auxiliary, telemetric, kinetic, and miscellaneous.

1. True
2. False

Q9. Message blanks are the standardized method of written communication used to relay damage control information.

1. True
2. False

DIAGRAMS AND BLUEPRINTS

Learning Objective: Recall the purpose and use of damage control diagrams and blueprints.

As a Damage Controlman you will often use various shipboard diagrams and blueprints. The ship's plans (blueprints) and isometric damage control diagrams are the drawings that you will use most. To better understand the ship's plans and blueprints, you should complete the NRTC *Blueprint Reading and Sketching*, NAVEDTRA 12014.

In addition to knowing how to read drawings, you must also know how to locate applicable drawings. The onboard drawings, which are sometimes referred to as ship's plans or ship's blueprints, are listed in the Ship's Drawing Index (SDI). The SDI is kept in the engineering department office (log room).

The SDI lists all working drawings that have a NAVSHIPS or NAVSEA drawing number, all manufacturer's drawings, all equipment drawing lists, and all assembly drawings that list detail drawings. Drawings that are actually kept onboard are identified in the SDI by an asterisk (*). Drawings are listed in numerical order in the SDI.

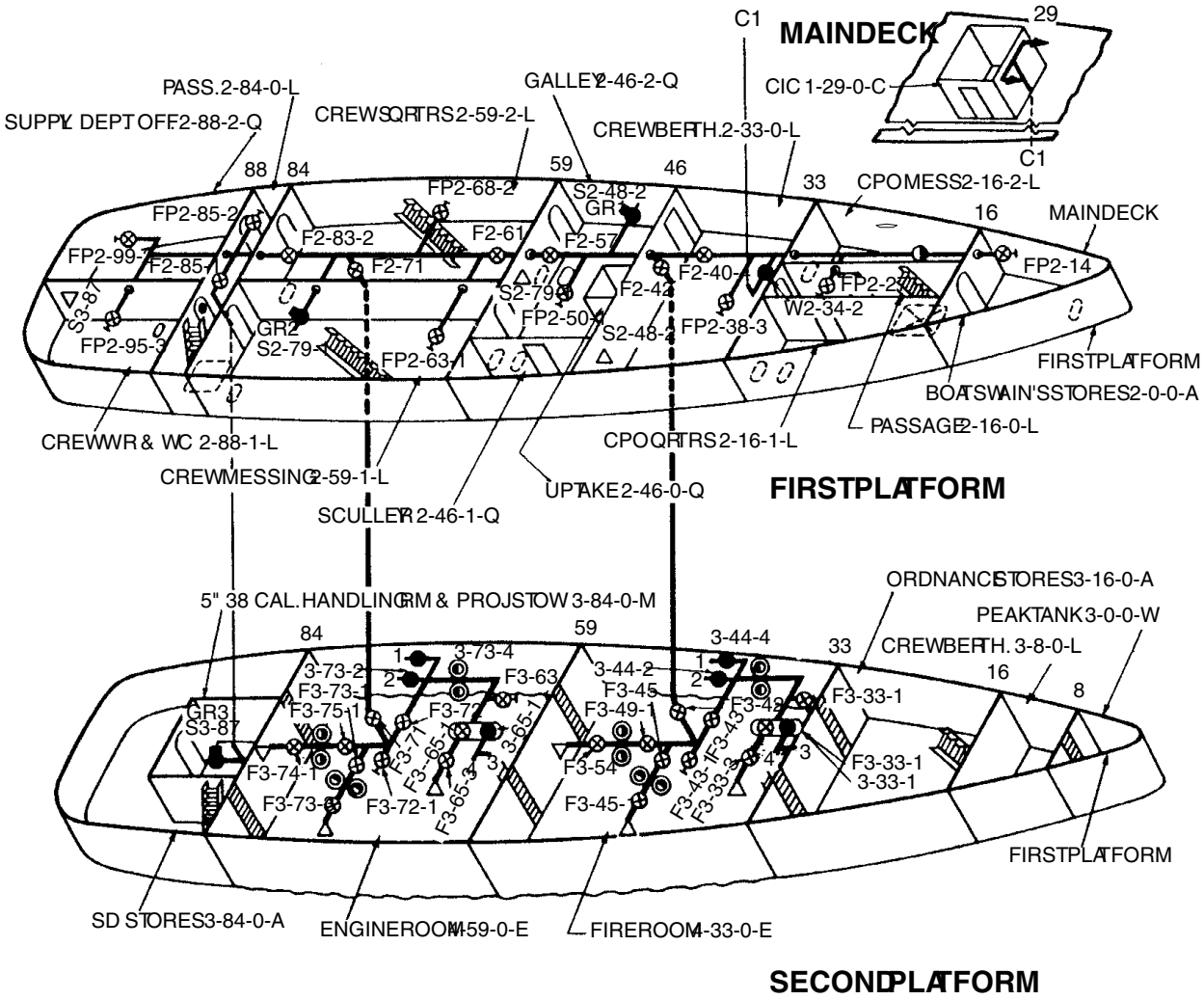

FIREMAIN, SPRINKLER AND WASHDOWN SYSTEMS

KEY

F FIREMAIN
S SPRINKLER } SEE NOTE
W WASHDOWN

- VALVE AND CHANGE OF SYSTEM
- VALVE
- VALVE - REMOTELY OPERATED
- VALVE - REMOTELY OPERATED AND CHANGE OF SYSTEM
- CHECK VALVE - SHADED PORTION IS OUTLET
- HOSE VALVE, FIRE PLUG OR JUMPER CONN
- VALVE MANIFOLD
- REMOTE CONTROL STATION - FIG. INDICATES VALVE OPERATED
- WASHDOWN SPRAY NOZZLE - FLOW IS IN DIRECTION OF APEX
- PUMP - SHADED PORTION IS OUTLET
- SEA CHEST
- BULKHEAD PENETRATION

1-OVERBOARD DISCHARGE
2-TANK BALLASTING
3-FO TANK DRAIN
4-DRAINAGE SUCTION

NOTES

DOTTED LINES INDICATE BOUNDARIES, PIPING AND FITTINGS HIDDEN FROM VIEW

HEAVY LINES INDICATE WATERTIGHT OR OILTIGHT BOUNDARIES

THIN LINES INDICATE AIRTIGHT FLAMETIGHT OR NON-TIGHT BOUNDARIES

THE LETTER PRECEDING THE VALVE OR FITTING NUMBER REFERS TO THE SYSTEM AND IS NOT ACTUALLY PART OF THE VALVE OR FITTING NUMBER EXCEPT FP FOR FIRE PLUG

DCf0215

Figure 2-15. A typical isometric damage control diagram.

The onboard drawings are filed in numerical sequence. On most ships, they are kept in file cabinets in the log room. However, they may be filed in a technical library or the microfilm library on aircraft carriers, tenders, and repair ships. Although you may use blueprints and drawings for damage control purposes, you will primarily use the isometric damage control diagrams, as shown in figure 2-15. These diagrams are three-dimensional. They are developed and provided under strict requirements set forth by NAVSEA.

When NAVSEA furnishes a group of ships their diagrams, the ship's force must verify the diagrams for accuracy. Corrections should be made to show the actual installation within the ship. To read these diagrams correctly, you need to recognize the standard symbols used. A few of these symbols are shown in figure 2-16. Each diagram will have a key, which will identify the symbols used on that diagram. As a rule, the different systems are drawn in different colors. This makes it easier to distinguish one system from another.

Isometric damage control diagrams that are not kept in the damage control books are usually sealed in plastic. They are stowed in special cabinets and are located in DCC and in the various repair party lockers. During casualties, these drawings may be used to plot casualties and provide an overview for their coordination.

On the isometric damage control diagrams, each deck or platform is shown at a separate level. Compartments that are not intersected by a particular deck are not shown on the diagram for that deck. Instead, they are drawn as part of the deck from which they extend. Heavy lines indicate watertight and oiltight boundaries. Lighter lines indicate airtight, fumetight, and nontight boundaries.

The isometric damage control diagrams show piping systems as close as possible to their actual shipboard locations. All piping and fittings that are actually contained within a compartment are shown in that compartment on the diagram. However, the precise location may be shifted a little to make the diagram clear and readable. Dotted lines and cross-hatchings indicate hidden boundaries, piping, and valves. Usually the isometric damage control diagrams are not drawn to scale.

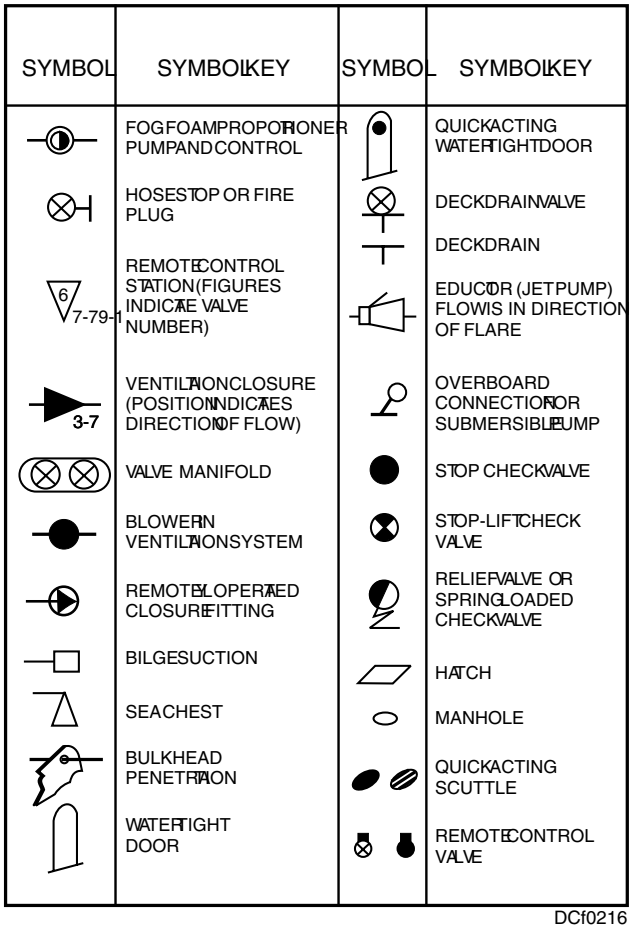

Figure 2-16. Some symbols used on damage control diagrams.

REVIEW QUESTIONS

Q10. What types of drawings does a Damage Controlman use most often?

1. Working drawings and site plans
2. Structural and architectural drawings
3. Rough sketches and geometric drawings
4. Blueprints and isometric damage control diagrams

Q11. Damage control central and the various repair lockers are locations that may use isometric damage control diagrams during a casualty.

1. True
2. False

Q12. On an isometric damage control diagram, what types of information are indicated by dotted lines and cross-hatchings?

1. Telephone lines and working areas
2. Hidden boundaries, piping, and valves
3. Fire hose lines and hatch openings
4. Water lines and watertight doors

SUMMARY

This chapter has covered the organization of the damage control program aboard ship and some sources of information that cover damage control. You learned about the responsibilities of the various repair parties and the personnel within those parties. You studied the use of blueprints and diagrams in damage control. Also, you have learned about various communications systems aboard ship and how they work in damage control.

REVIEW ANSWERS

A1. The two elements of the damage control organization are the damage control administrative organization and the damage control battle organization. **(1) True**

A2. The three objectives of damage control are as follows: (1) Maintain the established material conditions of readiness; (2) train all personnel in all aspects of shipboard damage control; (3) maintain damage control systems and equipment in the best condition possible to ensure survivability. **(1) True**

A3. What damage control station receives reports from all others and coordinates their actions? **(3) Damage control central**

A4. The three responsibilities of the at-sea fire party are as follows: (1) Respond immediately to fire alarms when the ship's repair parties are not manned; (2) extinguish small fires without disrupting other ship operations; (3) control fires until ongoing sensitive critical evolutions can be secured and GQ stations can be manned and ready. **(1) True**

A5. What person is in charge of the fire party at the emergency scene and directs the efforts of the fire party to combat the emergency situation? **(2) The on-scene leader**

A6. Investigators normally operate in pairs, travel assigned routes, and report conditions to the repair locker. **(1) True**

A7. By monitoring the reports of other repair stations, each repair party will be able to assume the duties of DCC if DCC becomes a battle casualty. **(1) True**

A8. The five types of sound-powered battle telephone systems include primary, auxiliary, telemetric, kinetic, and miscellaneous. **(2) False**

A9. Message blanks are the standardized method of written communication used to relay damage control information. **(1) True**

A10. What types of drawings does a Damage Controlman use most often? **(4) Blueprints and isometric damage control diagrams**

A11. Damage control central and the various repair lockers are locations that may use isometric damage control diagrams during a casualty. **(1) True**

A12. On an isometric damage control diagram, what types of information are indicated by dotted lines and cross-hatchings? **(2) Hidden boundaries, piping, and valves**

CHAPTER 3

SHIP COMPARTMENTATION AND WATERTIGHT INTEGRITY

Learning Objectives: Recall the definitions of terms used to define the structure of the hull of a ship and the numbering systems used for compartment number designations. Identify the different types of watertight closures and recall the inspection procedures for the closures. Recall the requirements for the three material conditions of readiness, the purpose and use of the Compartment Checkoff List (CCOL) and damage control closure log, and the procedures for checking watertight integrity.

A ship's ability to resist sinking after sustaining damage depends largely on the ship's compartmentation and watertight integrity. When these features are maintained properly, fires and flooding can be isolated within a limited area. Without compartmentation or watertight integrity, a ship faces almost certain doom if it is severely damaged and the emergency damage control (DC) teams are not properly trained or equipped.

In this chapter, you will be introduced to compartmentation, material conditions of readiness, watertight integrity, and how they relate to each other. You will also learn about compartment checkoff lists, the DC closure log, the proper care of access closures and fittings, compartment inspections, the ship's draft, and the sounding and security patrol watch. The information in this chapter will assist you in completing your personnel qualification standards (PQS) for basic damage control.

COMPARTMENTATION

Learning Objective: Recall the definitions of terms used to define the structure of the hull of a ship and the numbering systems used to identify the different compartments of a ship.

The compartmentation of a ship is a major feature of its watertight integrity. Compartmentation divides the interior area of a ship's hull into smaller spaces by the use of structural members.

Refer to figure 3-1 while reviewing the information on structural members.

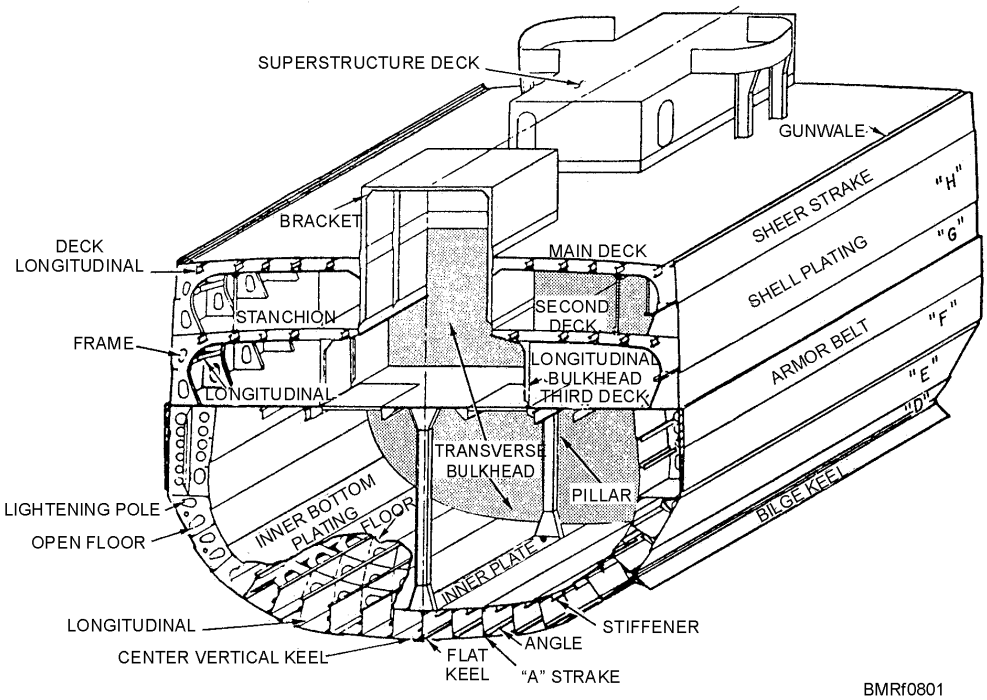

Figure 3-1. Illustrative hull structure.

The keel is the backbone of the ship. The keel does not extend below the ship's bottom. Its usual shape is that of an I-beam. All other members used in constructing the hull are attached, either directly or indirectly, to the keel.

The athwartship structure consists of transverse frames and floors. The floors run outboard from the keel to the turn of the bilge (where the bottom turns upward). This is where they are attached to the transverse frames that extend upward to the main deck.

Frames, running parallel with the keel, are known as longitudinal frames. From the turn of the bilge up the sides, they are called stringers. The network of floors and longitudinal members resembles a honeycomb and is known as cellular construction, which greatly strengthens the bottom. When plating covers the honeycomb structure, double bottoms are formed. The space between the inner and outer bottoms (known as tanks) is used for liquid stowage. The forward end of the keel is extended upward in the stem. The after end has a similar extension, called the sternpost. The part of the stem above water is the prow; the forward edge of the stem is the cutwater.

The interior of a ship is divided into compartments by vertical walls, called bulkheads, which run both transversely and longitudinally. Most bulkheads are merely partitions, but transverse watertight bulkheads are spaced at appropriate intervals. These structural bulkheads extend from the keel to the main deck and from side to side. They provide extra transverse stiffening and partition the hull into independent watertight sections. Large ships have a series of longitudinal side bulkheads and tanks that provide protection against torpedoes. The outer tanks usually are filled with oil or water. The inner tanks, which are called voids, are empty. The innermost bulkhead is called a holding bulkhead. When a torpedo hits, the outer tanks, although ruptured, absorb enough energy from the explosion that the holding bulkhead will remain intact. This helps to prevent flooding of the vital spaces.

The hull plating is fastened to the framework in longitudinal rows, called strakes. The keel forms the center strake. The strakes are lettered, beginning with the A-strake on either side of the keel and extending up to the main deck. Some of the strakes also have names. The A-strake is called the garboard strake; the strake along the turn of the bilge is the bilge strake; the uppermost strake is the sheer strake.

As stated, the projecting keel, running along the bottom near the turn of the bilge, is called the bilge keel. The purpose of the bilge keel is to reduce rolling of the ship.

NOTE

A ship **rolls** from side to side. A ship **pitches** when it goes up and down fore and aft. A ship **yaws** when the bow swings to port and starboard because of wave action.

The upper edges of the sides where the sheer strakes join the main deck are called the gunwales (rhymes with funnels). The foremost part of the ship, where the gunwales join the stem, is known as the eyes of the ship (fig. 3-2). Where the gunwales curve inward to the sternpost are the port and starboard quarters.

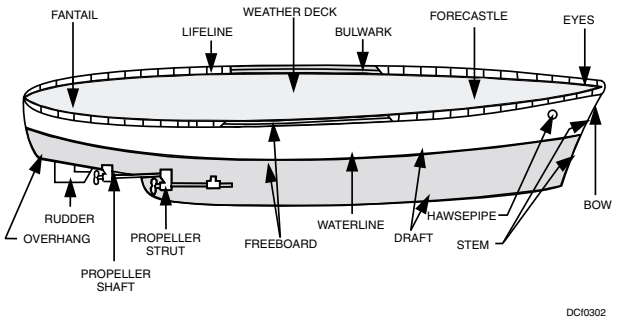

Figure 3-2. Hull terms.

The water level along the hull of a ship afloat is the waterline. The vertical distance from the keel to the waterline is the ship's draft. Freeboard is the distance from the waterline to the main deck.

The floors of a ship are called decks (fig. 3-3). Decks divide the ship into layers and provide additional hull strength and protection for internal spaces. The lower surface of each deck forms the overhead (never the ceiling) of the compartment below. Compartments are the spaces within a ship.

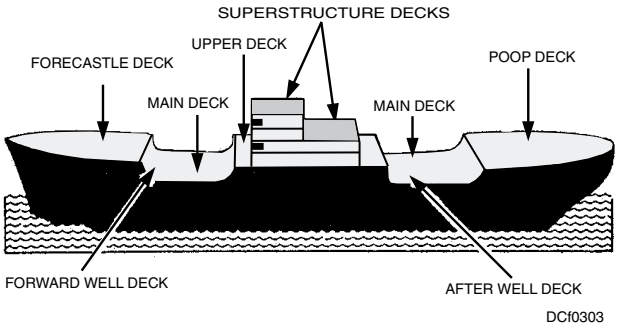

Figure 3-3. Weather decks.

A steel deck is made of strakes running fore and aft. The outboard strake in the deck plating is composed of stringer plates, which are welded or riveted to the side plates and are, therefore, important strength members. Decks are supported by transverse frames (deck beams) and by longitudinal (deck) girders. Vertical steel pillars that are called stanchions provide other means of deck support. These are mounted one above the other or one above a strength bulkhead. (The short posts used as lifeline supports also are called stanchions.) Decks usually are arched from the gunwale to the centerline to provide for drainage of water and to strengthen the deck.

A deck or part of a deck exposed to the weather is called a weather deck (fig. 3-3). Bulwarks are solid fencing along the gunwale of the main (weather) deck. Bulwarks are fitted with freeing ports (scuppers) to allow the water to run off during heavy weather.

A deck that extends from side to side and stem to stern is a complete deck. In aircraft carriers the uppermost complete deck is the flight deck, from which aircraft take off and land. In all ships (except for aircraft carriers) the uppermost complete deck is the main deck. In aircraft carriers the hangar deck is the main deck. The hangar deck is the deck on which aircraft are stowed and serviced when not on the flight deck.

The first complete deck below the main deck is the second deck (fig. 3-4), the next the third, the next the fourth, and so on.

A strength deck is a complete deck (usually the main deck) designed to carry not only deck loads on it but also the hull stresses. The damage control deck is the lowest deck having access through the main transverse bulkheads, from forward to aft. The main repair equipment and the principal facilities for the control of flooding, sprinkling, and pumping under conditions of damage are located on the damage control deck. The DC deck is either the second or third deck on most ships.

The definition and location of the decks in modern ships (figs. 3-3 and 3-4) are as follows:

FORECASTLE (pronounced folk'sul): Forward section of the main deck, generally extending from the stem aft to just abaft the anchor windlass.

HALF DECK: Any partial deck between complete decks.

PLATFORMS: Partial decks below the lowest complete deck. They are usually broken to admit machinery or other spaces and are called platform decks or just platforms. They are numbered downward, as first platform, second platform, and so on.

FLATS: Plating or gratings installed only to provide working or walking surfaces above bilges.

LEVELS: Level is a general term used to designate deck heights above the main deck. The first level above the main deck is the 01 (pronounced oh-one) level, the second the 02 level, and so on. Different decks at a particular level, however, carry different names. For example, both a poop deck and a boat deck (usually) are on the 01 level.

UPPER DECK: A partial deck extending from side to side above the main deck amidships. It is part of the superstructure, which is the part of a ship's structure above the main deck, exclusive of masts, yards, stacks, and related parts. The side plating extends upward to the upper deck.

SUPERSTRUCTURE DECK: A partial deck above the main, upper, or forecastle deck that does not extend to the sides of the ship (if it does, it does not have the side plating carried up to it.).

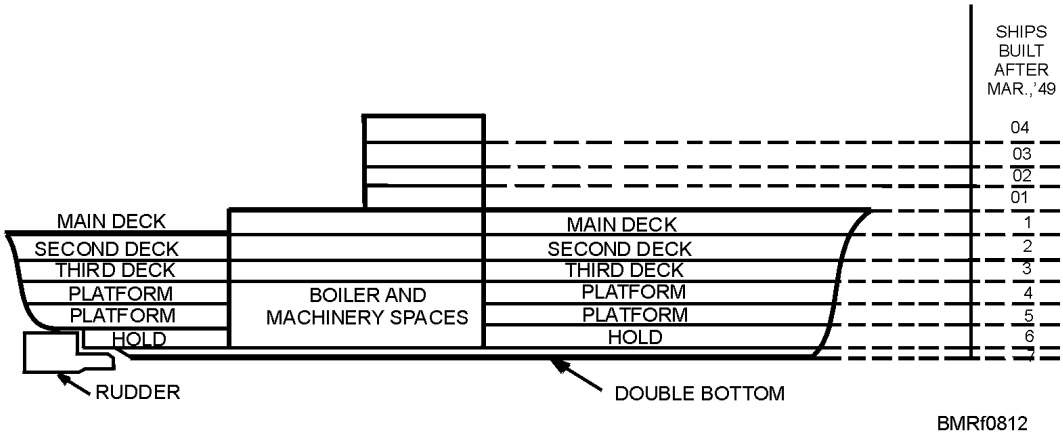

Figure 3-4. Deck numbering system.

POOP DECK: A partial deck above the main deck located all the way aft.

FORWARD WELL DECK: Forward part of the main deck between the upper deck and forecastle.

AFTER WELL DECK: Between the upper deck and the poop deck.

GALLERY DECK: First deck or platform below the flight deck.

QUARTERDECK: The quarterdeck is not an actual deck, but an area designated by the commanding officer for the conduct of official functions. It is the station of the officer of the deck in port and usually is on the main deck at the starboard gangway.

NOTE

Companionways (ladders) lead from one deck level to another. They may or may not be covered by hatches.

The number of compartments into which the decks and bulkheads subdivide the ship's interior area depends upon how many the ship's mission will allow. Since the compartments are both above and below the waterline, when the degree of compartmentation on a ship is increased, the ship's resistance to sinking is also increased.

Compartmentation serves the following functions:

- Allows for more effective control of fires and floods.
- Strengthens the ship's structure.
- Helps defend against a chemical, biological, and radiological (CBR) attack.
- Segregates various ongoing activities.
- Provides underwater protection by the use of tanks and voids to help control the ship's buoyancy and stability.

Most large combatant ships have an armor belt to protect the vital machinery spaces. Armor plating may reduce the ship's speed or have an adverse effect on the operation of the ship. Aircraft carriers are a prime example where excessive armor plating would interfere with the ship's operation by reducing the ship's speed. Therefore, armor plating on aircraft carriers is reduced, while compartmentation is increased to compensate for the reduction of armor.

REVIEW QUESTIONS

Q1. The keel is the backbone of the ship.

1. True
2. False

Q2. What is the forward edge of the stem called?

1. Bow
2. Garboard
3. Scupper
4. Cutwater

Q3. The vertical distance from the keel to the waterline of a ship is known by what term?

1. Draft
2. Freeboard
3. Stability line
4. Buoyancy depth

Q4. The first level above the main deck is called the 02 level.

1. True
2. False

Q5. Compartmentation is the design factor on a ship that allows for more effective control of fires and floods.

1. True
2. False

COMPARTMENT NUMBERING

Learning Objective: Recall compartment number designations for ships built after March 1949.

Compartments on Navy ships are numbered for identification following a standard system. Each compartment has a four-part number separated by hyphens; the four parts indicate the following:

1. The deck upon which the compartment is located.
2. Location of the compartment by frame.
3. The position of the compartment relative to the ship's centerline.
4. The compartment use.

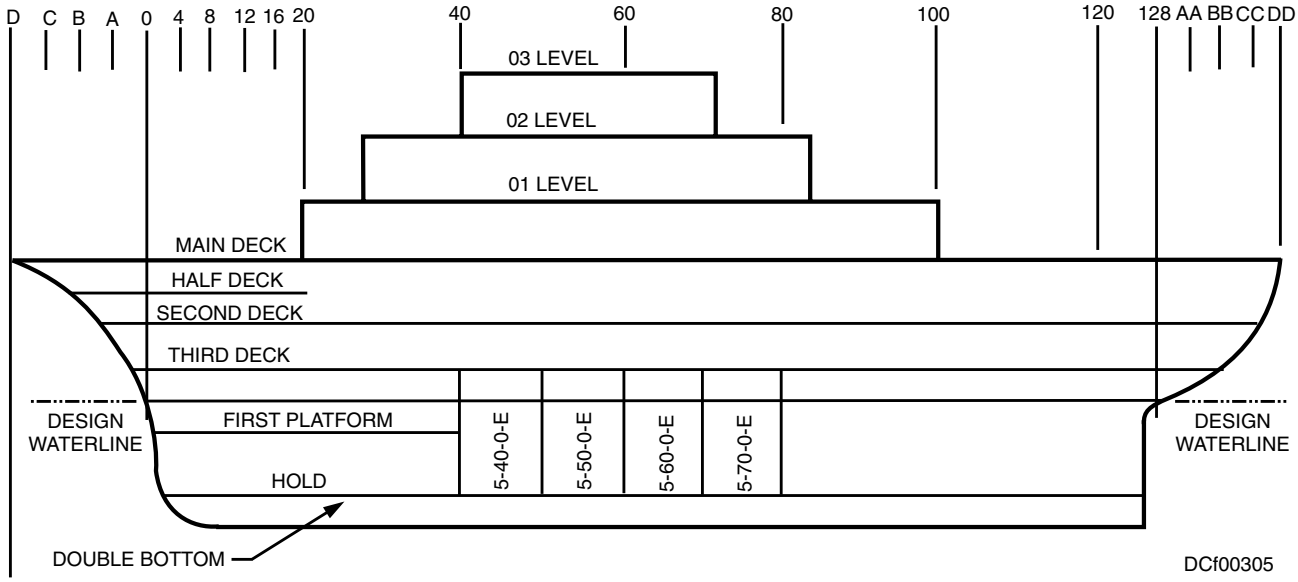

Figure 3-5. Frame numbering.

All frames forward of the forward perpendicular are identified by a capital letter, starting with A (fig. 3-5). These frames are identified by starting with the first frame forward of the forward perpendicular and working forward. The frames aft of the aft perpendicular are identified with double capital letters, starting with AA. Starting with the first frame aft of the aft perpendicular and working aft identifies these frames. The frames between the forward perpendicular and the aft perpendicular are identified by numbers. The forward perpendicular is identified by the number 0 (zero). Each frame aft of the forward perpendicular will carry the next higher consecutive number. The last numbered frame is the aft perpendicular. If the forward boundary of a compartment is located between frames, the frame number farthest forward within the compartment is used. Compartments located on the ship's centerline carry the number 0.

Compartments completely to starboard are given odd numbers, and those to port are given even numbers. Where two or more compartments have the same deck and frame number, they have consecutively higher odd or even numbers, as applicable, numbering from the centerline outboard. In this instance, the first compartment to starboard is 1, the second is 3, and so on. To port of the centerline they are numbered 2, 4, and so forth. When the centerline passes through more than one compartment, each of which has the same frame number, the compartment having the forward bulkhead through which the centerline passes carries the number 0; the others are numbered 01, 02, 03, as applicable (fig. 3-6).

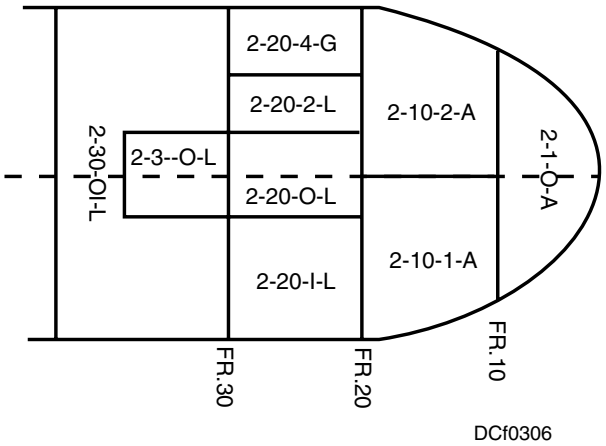

Figure 3-6. Compartment designations.

The last part of the compartment number is the letter that identifies the primary usage of the compartment. On dry- and liquid-cargo ships, a double letter is used to designate cargo spaces. The double letter will differentiate them from spaces containing the same commodity for use by the ship. Fuel oil and JP-5 jet fuel are two examples.

Compartment usage in the post-1949 system is shown in table 3-1.

Access closures are numbered in the same manner as compartments, except that the letter designating the compartments use is omitted (example: 2-175-3).

Table 3-1. Compartment Letters for Ships

Letter	Type of Compartment	Examples
A	Stowage spaces	Store and issue rooms; refrigerated compartments
AA	Cargo holds	Cargo holds and cargo refrigerated compartments
C	Control centers for ship and fire-control operations (normally manned)	CIC; plotting rooms; communications centers; pilot house; electronic equipment operating spaces; IC rooms
E	Engineering control centers (normally manned)	Main machinery spaces; evaporator rooms; steering gear rooms; pump rooms; auxiliary machinery spaces; emergency generator rooms
F	Oil stowage compartments (ship use)	Fuel- , diesel- , and lubricating-oil compartments
FF	Oil stowage compartments (cargo)	Compartments carrying various types of oil as cargo
G	Gasoline stowage compartments (ship use)	Gasoline tanks, cofferdams, trunks, and pump rooms
GG	Gasoline stowage compartments (cargo)	Spaces for carrying gasoline as cargo
J	JP-5 fuel (ship use)	Jet fuel stowage spaces
JJ	JP-5 fuel (cargo)	Spaces for carrying JP-5 fuel as cargo
K	Chemicals and dangerous materials (other than oil and gasoline)	Chemicals, semisafe materials, and dangerous materials carried as cargo or for ship's use
L	Living spaces	Berthing and messing spaces; staterooms; washrooms; heads; brig; sick bay; and passageways
M	Ammunition spaces	Magazines; handling rooms; turrets; gun mounts; shell rooms; ready service rooms
Q	Miscellaneous spaces not covered by other letters	Laundry; galley; pantries; wiring trunks; unmanned engineering; electrical and electronic spaces; shops; offices
T	Vertical access trunks	Escape trunks
V	Voids	Cofferdam spaces (other than gasoline); void wing compartments
W	Water stowage spaces	Drainage tanks; freshwater tanks; reserve feedwater tanks

REVIEW QUESTIONS

Q6. Each compartment has a four-part number separated by hyphens.

1. True
2. False

Q7. Compartments completely to starboard are given odd numbers.

1. True
2. False

Q8. The last part of the compartment number is the letter that identifies the

1. primary use of the compartment
2. size of space inside the compartment
3. side the compartment is on
4. deck the compartment is on

WATERTIGHT INTEGRITY

Learning Objective: Recall different types of watertight closures and the inspection procedures for the closures.

The watertight integrity of a naval ship is established when the ship is built. "Watertight integrity" is defined as closures or fittings that prevent the ingress of water to certain compartments. This original watertight integrity may be reduced or destroyed through enemy action, storm damage, collision, stranding, or negligence. The damage control officer (engineer officer) is responsible for ensuring that the ship's watertight integrity is not impaired through negligence. Any impairment that occurs must be corrected as soon as possible. The ship's material condition of readiness in effect will also increase or decrease the ship's level of watertight integrity.

TYPES OF WATERTIGHT CLOSURES

The following list and illustrations (figs. 3-7 through 3-10) provide information on four of the many types of watertight closures on a ship. For more detailed information, refer to NAVSEA Publication S9169-AW-DCB-010.

1. **Quick-Acting Watertight Door (fig. 3-7)**—Used for routine passage and access/egress into superstructure from weatherdecks, main passageways, or manned spaces, such as Combat Information Center, Radio Central, Machinery Room, or Damage Control Central. These doors are usually placed in high traffic areas.

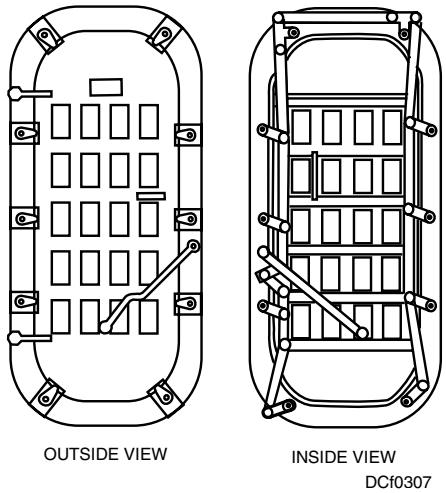

Figure 3-7. Quick-acting watertight door.

2. **Individually Dogged Watertight Doors (fig. 3-8)**—Watertight doors are either 4-, 6-, 8-, 10-, or 12-dogged doors. They provide access/egress to compartments that are not high usage spaces, which do not require rapid access, such as paint lockers, deck gear lockers, or storerooms. Ten-dog doors are usually found below the water line in order to maintain a higher degree of watertight integrity.

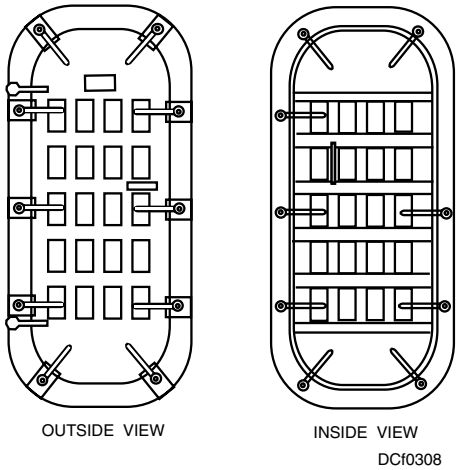

Figure 3-8. Individually dogged watertight door.

3. **Raised Watertight Hatch (fig. 3-9)**—Installed in interior and exterior areas where rapid access/egress is not required. Usually found in a low

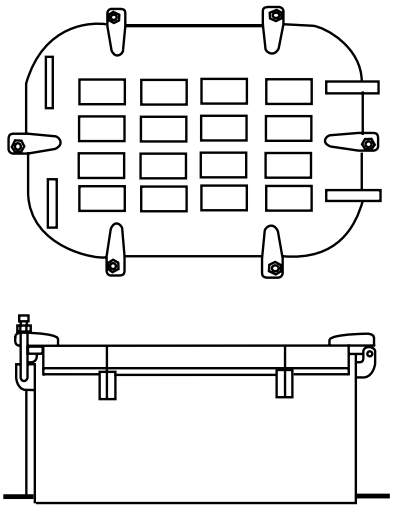

DCf0309

Figure 3-9. Raised watertight hatch.

traffic area and offset in a corner of a passageway or compartment. These hatches are usually installed in compartments, which provide egress by other means. These hatches do not have escape scuttles. Usually used for stores onload/offload and access for heavy equipment.

4. **Raised Watertight Hatch with Scuttle (fig. 3-10)**—Installed in interior and exterior areas where rapid access/egress are required. This hatch is usually provided in higher traffic areas than the raised watertight hatch and is offset in a corner of a passageway or compartment. These hatches have escape scuttles to provide rapid access/egress. Usually found above berthing compartments, unmanned spaces, and all deck levels requiring rapid access/egress.

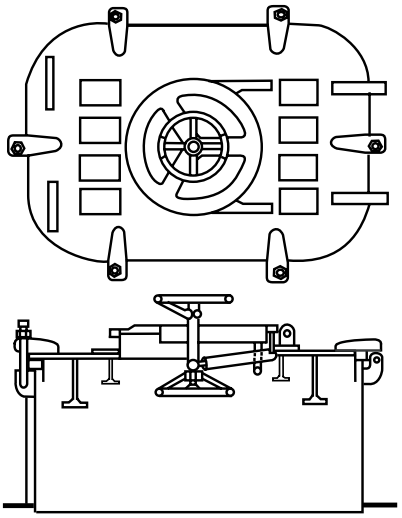

DCf0310

Figure 3-10. Raised watertight hatch with scuttle.

INSPECTION OF WATERTIGHT CLOSURES

The following principles apply to inspections for all watertight closures:

- Comply with *Navy Safety Precautions for Forces Afloat*, OPNAVINST 5100 series, which is found in each work center.
- All tag-out procedures shall be according to current shipboard instructions.
- Exercise extreme caution when working around open trunk areas.
- Perform inspection and maintenance semiannually or more frequently if adverse conditions are encountered.
- Loose, missing, or damaged parts and parts showing excessive wear must all be replaced.

Damage control petty officers, work center supervisors, and zone inspectors should routinely inspect doors, hatches, and scuttles for the following:

- Loose, missing, and damaged parts.
- Paint, rust, and other foreign matter on gaskets, knife-edges, and working parts, such as bushings, linkages, and brackets.
- Binding and difficult operations.
- Distortion and deterioration of metal surfaces.
- Hinge pin wear and pins that are not properly secured.
- Gasket cracks, deterioration, hardness, permanent set over 1/8 inch deep, and gaps due to shrinkage where gasket ends meet.
- No more than two joints in gaskets. Lengths of gasket must be no less than 24 inches in length.
- Obstructed access to escape scuttles.
- Packing plungers intact and stick packing adequate (except on closures with self-lubricated bushings).
- Broken or missing spring clips.
- Missing special-purpose wrenches (dogging wrenches, T-wrenches, and engineer's wrenches).

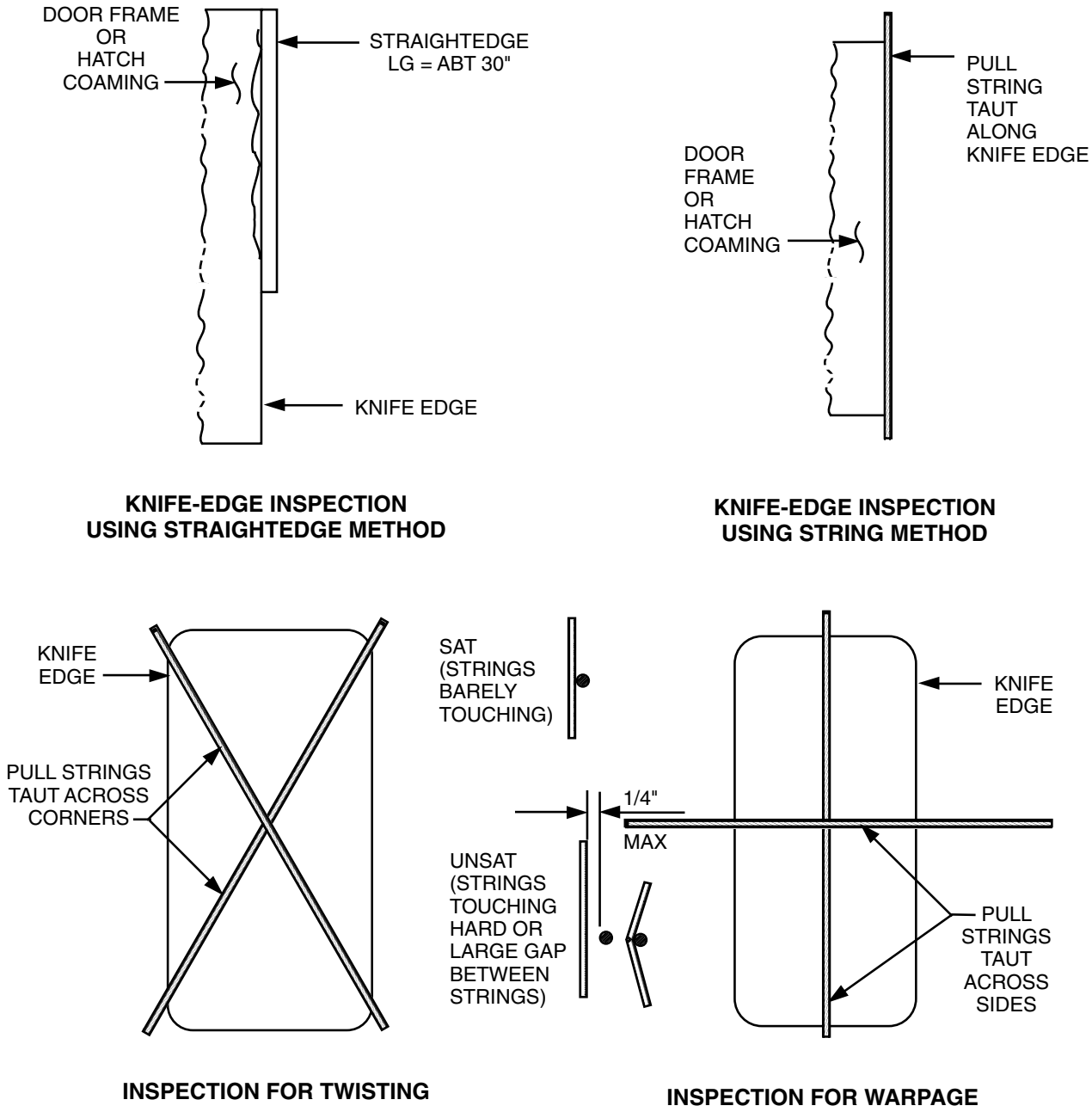

Figure 3-11. Watertight doorframe inspection.

NOTE

For detailed instructions for maintenance on watertight doors, refer to Shipboard PMS Cards and NAVSEA Publication S9169-AW-DCB-010.

Open the fitting (fig. 3-11). Inspect the knife-edge for straightness and/or warpage using a straightedge and two lengths of string. The maximum acceptable variation for knife-edge straightness is plus or minus 1/8 inch. The maximum acceptable warpage of the doorframe is 1/4 inch. If frame/coaming warpage is excessive or if knife-edge straightness is not within tolerances, initiate action to replace the closure. For further information, refer to NAVSEA Publication S9169-AW-DCB-010.

Inspect the knife-edge for paint, dirt, rust, or nicks. For steel knife-edges, remove paint and rust with #320 grit aluminum oxide abrasive cloth. Be sure to remove the abrasive grit with a clean rag to prevent the grit from getting embedded in the gasket. For aluminum knife-edges, remove paint with a nylon scrubbing pad and a rag only.

Inspect the entire knife-edge for proper height. A block of aluminum cut to the correct specifications is

an effective gauge for doing this (fig. 3-12). A knife-edge that is too high damages the gasket; a knife-edge that is too low damages the hinges as a result of over-adjusting the door in attempting to maintain a watertight seal. If the knife-edge is more than 1/8 inch too high or too short, it must be repaired.

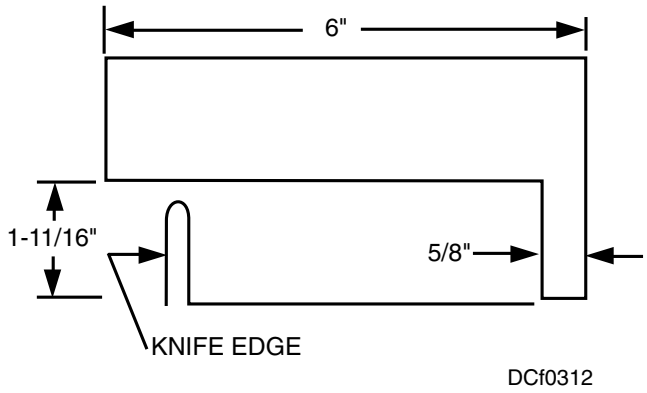

Figure 3-12. Gauge for measuring knife-edge height.

For steel knife-edges, repair a nicked or short knife-edge by building up the area with corrosion-resistant stainless steel electrode and filing it with a flat file. Grind a high knife-edge to shorten it to the required height. The use of power grinders on a knife-edge is not recommended. Straighten bent knife-edges by reshaping with a hammer or by bending.

For aluminum knife-edges, do not attempt to build up a short knife-edge. Report the closure to your repair division for repair. Use only a fine file to file down high knife-edges, and avoid leaving grooves in the edge. Use a steel striker plate when hammering a bent aluminum knife-edge to avoid denting the aluminum.

Rubber gaskets are installed in watertight closures to provide a watertight fit all-around when they bear against the knife-edge. Inspect the gasket (fig. 3-13) for the following:

- The rubber must be soft and pliable and have no cracks.
- There should be no paint, rust, or other foreign matter.
- The gasket joint should be located at the top of the door.
- There must not be any gaps in the gasket joint. Replace the gasket if shrinkage has caused separation where the two ends join.
- A permanent set or groove in the rubber may not be greater than 1/8 inch deep.

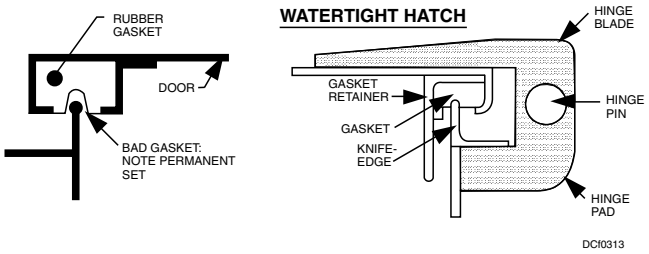

Figure 3-13. Gasket inspection.

The chalk test is a simple means of determining if the gasket is in continuous contact with the knife-edge when a closure is dogged. A successful chalk test does not guarantee that a closure is watertight, but if the gasket is in good condition and the dogs are properly adjusted, it does provide a reasonable assurance of watertight integrity.

The steps of the procedure for the chalk test for doors, hatches, and scuttles are as follows:

1. Clean the knife-edge.
2. Clean the gasket.
3. Rub chalk on the knife-edge.
4. Close and dog the closure tightly.
5. While the closure is dogged down, check for any loose dogs. If any dog is loose, it will need to be adjusted and the chalk test repeated.
6. Open the closure and observe the imprint of chalk on the gasket. The chalk imprint should be in the center of the gasket. If the chalk line is not continuous, the closure is not watertight and requires further adjustment or repair. For further information, refer to NAVSEA Publication S9169-AW-DCB-010.

Faulty gaskets are a main source of leakage through closures. Rubber gaskets (fig. 3-14) are installed in doors, hatches, scuttles, air ports, and dogged manholes to provide a tight fit all-around. When exposed to oil, grease, heat, or paint, the gaskets begin to deteriorate. Gaskets should be protected from exposure to substances or conditions that cause deterioration. Replace them immediately when they show signs of deterioration. Inspect them frequently to detect hardness, cracks, or permanent set (indentation) greater than 1/8 inch.

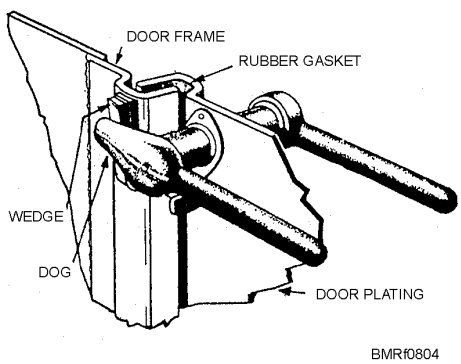

Figure 3-14. Watertight door parts.

Gaskets for bolted manhole covers and other bolted plates differ in size, shape, and material from those used with doors, hatches, scuttles, and dogged manholes. Bolted manhole covers and bolted plate gaskets should be renewed whenever they are found to be in poor condition when the cover is removed. Replacement of these gaskets at this time is particularly important since you cannot tell anything about the condition of the gasket when the manhole/plate is bolted down. The gasket may appear to be perfectly all right when actually it is in a poor condition and is providing a channel for progressive flooding. The replacement gaskets must be of the proper material. The manhole/plate bolts must be tightened up evenly all-around. A loosely secured manhole cover can be blown off by an explosion, whereas a cover that is tightly secured will not.

Be careful when moving heavy objects, such as ammunition or machinery, through watertight doors and hatches. If you are careless, you can distort the knife-edge or bearing surface of the closure by the impact of the heavy object.

The compression between a knife-edge and a gasket should be checked periodically. If necessary, adjust the closure until the compression specified in the manufacturer's technical manual is reached.

Watertight doors and hatches will retain their efficiency longer and will require less maintenance if you open and close them properly. When you close a door or hatch, secure a dog that is on the OPPOSITE SIDE of the closure from the hinges. Use just enough pressure to keep the door closed. Next, secure two dogs on the hinge side until snug. Then secure all the remaining dogs evenly to ensure an even compression all-around. When loosening dogs on watertight doors or hatches, loosen the dogs nearest the hinges first. This will keep the closure from springing and makes it easier to operate the remaining dogs.

A common place for leakage is around dog spindles where the spindles pass through doorframes. There is a stuffing box for each dog spindle. The packing in the stuffing box prevents leakage. Inspect the stuffing boxes frequently to ensure that they are in good condition. Tighten the packing gland to give the correct compression of the packing. Repack the dogs when the packing gets hard or deteriorates with age. Occasional adjustment of the dogs is required to compensate for the wearing down of the wedges, which the dogs bear down on. When wedges become badly worn, you should either build them up again by gas brazing or replace them.

For a door or hatch to be watertight when it is dogged, the knife-edge or bearing surface of the closure must be centered on the gasket. The knife-edge must also bear down on the gasket firmly and evenly all-around for the closure to be watertight. The door will not be watertight if either the door or the frame is warped. Also, the closure will not be watertight if the door or hatch is not located correctly on its hinges with respect to the doorframe. Other factors governing a closure's watertight feature are whether or not the knife-edge is straight and even, whether the retainer strips are secured firmly in place, and whether the dogs are adjusted to provide equal pressure on all of the wedges when the dogs are snugly set up. If any of these parts have an incorrect fit, the frame or knife-edges may come into contact with the metallic parts of the closure and thus allow the closure to be closed in a non-watertight condition.

Some ventilation ducts have covers to isolate the ventilation system. The gaskets on these covers are subject to the same kinds of failure that access closure gaskets are. Many ventilation closures and valves installed in the ventilation ducts lack tightness because of improper seating. These fittings should be inspected on a regular basis. If you lubricate and maintain the fittings on a routine basis, the fittings will stay in good working condition indefinitely.

Throughout the ship, electric cables pass through many watertight boundaries. The watertight integrity is maintained by passing each cable through a packed stuffing tube (fig. 3-15). Usually, several cables will pass through a deck or bulkhead in a small area known as a multi-cable transit frame (fig. 3-16). The stuffing tube nearest the center of the group can be repacked only with a great deal of difficulty. It is vital, however, that the packing be replaced when necessary. If you allow bad

packing to remain in the stuffing tube, you will have provided a means for progressive flooding to take place.

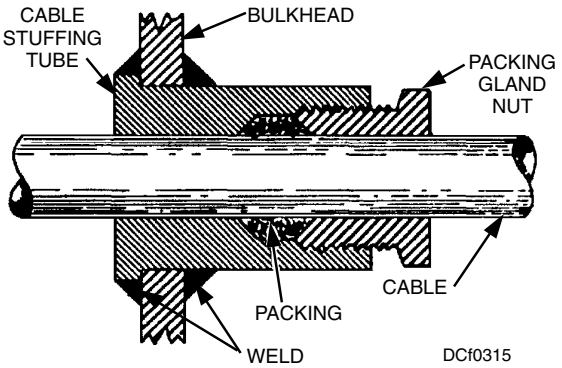

Figure 3-15. Cable penetration through watertight bulkhead.

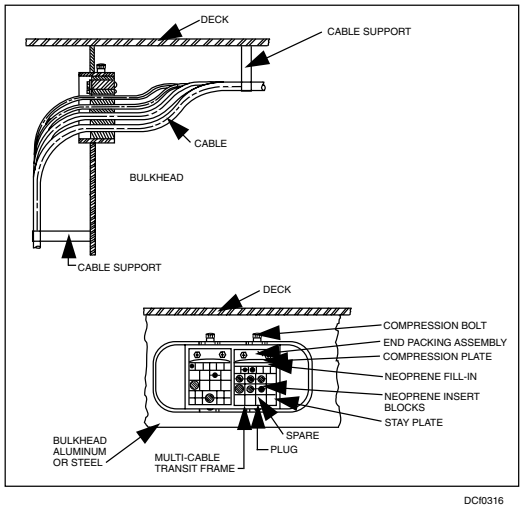

Figure 3-16. Multi-cable transit frame.

Leakage can occur where pipes pass through bulkheads and decks. Various methods are used to make the penetration points watertight. Watertight penetration points reduce the chance of progressive flooding.

Air-port covers operate basically the same as doors and hatches. You might need to tighten up the dogs on the air-port covers. If the dogs are not tight, the glass lenses of the air port can be broken by heavy seas or by the movement of the ship. When you secure an air-port cover, be sure to bring the hinge pin of the cover all the way out to the end of the hinge. By doing this, you can avoid the possibility of breaking the cover.

To replace the glass lens, drill and tap holes in the workbench top. These holes will need to be the same size as the holding bolts that are fitted through the securing lugs of the air-port frame. By drilling and tapping these holes, you will save a considerable amount of time when replacing the glass lens. Once you secure the air-port frame to the workbench, you will be able to unscrew the retaining ring. After you remove the old glass lens, clean the threads of the frame and the retaining ring. If the frame and ring are made of composition material, apply a light coating of oil or grease to the threads. Before you insert a new glass, embed the edges of the glass in red lead putty or another approved material. When you secure the retaining ring, the putty is forced out evenly all-around the glass lens, thereby ensuring a tight fit.

SAFETY

Safety is a major concern in whatever you do. When opening a closure, you can protect yourself by standing on the opposite side from the hinges and loosening the dogs nearest the hinge first. You will then find it easier to loosen the other dogs, and the door will not hurt you if there is an explosion within the compartment. The hinges help to keep the door from blowing open. If you are on the hinge side of the door when an explosion occurs, you will be caught between the door and the bulkhead.

Each closure has a safety device. Some hatches have stanchions; others have locking latches. Both devices use toggle pins to secure them in place. Be sure that the toggle pins are in place at all times when the hatch is open. Watertight scuttles have a safety device known as a bracing link assembly. Make sure that the bracing link assembly is in good operating condition at all times. When exiting a compartment through a scuttle, do not grab hold of the scuttle to pull yourself through. If the bracing link assembly fails to lock, the scuttle will fall on your head or fingers, causing considerable injury. A door catch is installed for each shipboard door. When a door is to be left open for a period of time, use the door catch. The movement of the ship could cause the door to slam shut. A door slamming shut will damage the door's gasket and could seriously injure a person. Most personnel injuries are not caused by the closure's design, but rather by an individual's carelessness.

REVIEW QUESTIONS

Q9. What type of door provides access to a compartment that is not often used?

1. Lightweight aluminum door
2. Quick-acting watertight door
3. Raised watertight hatch with scuttle
4. Individually dogged watertight door

Q10. The watertight integrity of a naval ship is established when the ship is built.

1. True
2. False

Q11. What types of watertight closures are installed in interior and exterior areas where rapid access or egress is required?

1. Lightweight aluminum doors
2. Quick-acting watertight scuttle
3. Raised watertight hatch with scuttle
4. Individually dogged watertight doors

Q12. A successful chalk test does not guarantee a closure is watertight, but it does provide a reasonable assurance of watertight integrity.

1. True
2. False

MATERIAL CONDITIONS OF READINESS

Learning Objective: Recall the requirements for the three material conditions of readiness.

The term *material condition of readiness* refers to the degree of access and system closure in effect at any given time. The securing of access fittings or systems limits the extent of damage that could occur to a ship.

MATERIAL CONDITIONS XRAY, YOKE, AND ZEBRA

For damage control purposes, naval ships have three material conditions of readiness. Each condition represents a different degree of tightness and protetion. These titles have no connection with the phonetic alphabet. Furthermore, the titles are used in all spoken and written communications that concern material conditions.

Material Condition XRAY

Condition XRAY provides the least amount of protection. It is set when the ship is in no danger of attack. Examples are when the ship is at anchor in a well-protected harbor or when secured at a home base during regular working hours.

Material Condition YOKE

Condition YOKE provides more protection than condition XRAY. It is set and maintained at sea during peacetime and in port during wartime. It is also maintained in port during peacetime outside of regular working hours.

Material Condition ZEBRA

Condition ZEBRA is set before leaving or entering port during wartime. It is also set immediately, without further orders, when manning general quarters (GQ) stations. Also, condition ZEBRA is set to isolate and control fires and flooding when the ship is not at GQ stations.

CLASSIFICATION OF FITTINGS

All watertight, airtight, fire-tight, and fume-tight access fittings will be classified. Each classification applies to a certain group of fittings. Although the fittings are usually classified by a basic classification, a select group of closures within each of the three material conditions of readiness will be modified. The purpose of the modified closures is to allow access to a space that is secured because of the material condition that is set. Once a material condition is set, no fitting within the condition is to be opened, except as noted. Closures that are not modified require permission of the commanding officer to be opened. Permission to open a closure is obtained through the damage control central (DCC) watch or the officer of the deck (OOD) when the ship is not manning the GQ stations. With approval of the damage control assistant (DCA), repair party officers control the opening and closing of all fittings in their assigned areas when the ship is at GQ. Any change in the status of a fitting must be reported to DCC so the ship's DC closure log may be updated. You may open a modified closure without any special authorization. However, you are not authorized to leave the closure open unattended. Through careful attention to these procedures, a ship's watertight integrity can be maintained at a safe level.

The following discussion will help you understand that various groups of fittings are assigned different classifications. Also, you will know when you may or may not open a fitting that has a certain classification.

XRAY Fittings

XRAY fittings are marked with a black X and are secured during conditions XRAY, YOKE, and

ZEBRA. Ship personnel must have special authorization to open these fittings. The black X identifying an XRAY classification should be on the following closures:

- Doors and hatches to storerooms and stowage spaces, including cargo ammunition spaces
- Hatches that are provided with a scuttle and lead to magazines and handling rooms
- Bolted-plate manhole covers
- Escape scuttles not covered elsewhere
- Doors and hatches located only on the weather deck and below that are used to strike down stores and ammunition
- Access to an aircraft fueling station compartment
- Access to escape trunks in machinery spaces
- Access to the arresting gear machinery room
- Access to the eductor room
- Access to the capstan and winch control room
- Access to the chain locker
- Access to the stores elevator
- Access to the catapult machinery room
- Access to forced draft blower rooms
- Access to fan rooms

CIRCLE XRAY fittings are marked with a black X inside of a black circle. These modified closures are secured during conditions XRAY, YOKE, and ZEBRA. However, personnel may open these fittings without special authorization when proceeding to battle stations or as required in routine inspection checks. You may open these closures, but you must secure them immediately after use.

CIRCLE XRAY closures and fittings are marked with a black X inside of a black circle. These closures and fittings are as follows:

- Doors to magazines and handling rooms
- Hatches that do not have a scuttle and lead to magazines and handling rooms
- Access to the missile handling and check-out area compartments
- Scuttles in hatches to the shaft alley, pump rooms, magazines, and handling rooms
- Access to the gas and fuel station and filter rooms
- Access to the oxygen-nitrogen rooms (compressor and producing)
- Access to the switch gear room, ammunition hoist, and elevators
- Access to the underwater log room
- Access to the equipment rooms that are unoccupied
- Scuttles for passing ammunition

YOKE Fittings

YOKE fittings are marked with a black Y and are secured during conditions YOKE and ZEBRA. You must have proper authorization to open fittings with this classification when the ship is at condition YOKE or ZEBRA.

YOKE closures and fittings marked with a black Y are as follows:

- Hatches that are provided with a scuttle and lead to shaft alleys and pump rooms
- Alternate accesses to machinery rooms
- Weather deck hatches not classified as XRAY
- Some alternate accesses on the DC deck and above
- Access to the windlass room
- Access to the generator rooms
- Access to the air compressor room
- Access to the air-conditioning machinery room
- Access to the refrigeration machinery room
- Access to the elevator machinery room
- Access to the missile director machinery room
- Access to the drying room

CIRCLE YOKE fittings are marked with a black Y inside of a black circle. These modified fittings are secured during conditions YOKE and ZEBRA. However, these fittings may also be opened without special authorization when personnel are proceeding to battle stations or as required in routine inspection checks. Again, you must secure these closures immediately after use.

CIRCLE YOKE fittings and closures marked with a black Y inside of a black circle are as follows:

- Hatches that do not have a scuttle and lead to the shaft alley and pump room
- Scuttles in the deck to the shaft alley and pump room
- Doors at the bottom of the trunk to the shaft alley and pump room
- Access to the steering gear power and ram room
- Access to the chill room

ZEBRA Fittings

ZEBRA fittings are marked with a red Z, and these closures are secured during condition ZEBRA. You must have proper authorization to open fittings with this classification when the ship is at condition ZEBRA.

ZEBRA closures and fittings marked with a red Z are as follows:

- All remaining doors and hatches for routine access
- Access to all shops, labs, commissary, utility, control, and hospital spaces
- Access to all offices
- Access to equipment rooms occupied when associated control room is in use
- Main access to machinery spaces
- Access to issue rooms
- Access to the steering gear room
- Access to the enclosed operating stations
- Access to hangar and flight deck control stations
- Access to the garbage disposal room
- Access to the trash burner and bin room

CIRCLE ZEBRA fittings are marked with a red Z inside a red circle. These modified fittings are secured during condition ZEBRA. CIRCLE ZEBRA fittings may be opened with the commanding officer's permission during prolonged periods of GQ. The opening of these fittings allows evolutions such as the preparation and distribution of battle rations, opening of limited sanitary facilities, ventilation of battle stations, and access for aviation personnel to the flight deck. When open, CIRCLE ZEBRA fittings must be guarded so they may be closed immediately if necessary.

CIRCLE ZEBRA closures and fittings marked with a red Z inside a red circle are as follows:

- Limited doors or scuttles from the weather deck to the crew's galley
- Doors from aviators and flight crew ready rooms to the flight deck

DOG ZEBRA fittings are marked with a red Z inside a black D. These modified fittings are secured during condition ZEBRA and darken ship conditions. You must have proper authorization to open fittings with this classification when the ship is at either condition ZEBRA or darken ship.

DOG ZEBRA fittings marked with a red Z inside a black D are as follows:

- Doors to the weather deck, excluding those classified XRAY or YOKE, that do not have a darken ship switch or a darken ship curtain
- Air ports (portholes)

WILLIAM Fittings

WILLIAM fittings are marked with a black W. These fittings are kept open during all material conditions. WILLIAM fittings are secured only as necessary to control damage or CBR contamination and to make repairs to the equipment served.

WILLIAM fittings are marked with a black W are as follows:

- Vital sea suction valves that supply the main and auxiliary condensers, fire pumps, and spaces that are manned during conditions XRAY, YOKE, and ZEBRA
- Vital valves that if secured would impair the mobility and fire protection of the ship

CIRCLE WILLIAM fittings are marked with a black W inside a black circle. These fittings are normally kept open, as is the case with WILLIAM fittings. They must, however, be secured to prevent the spread of damage and as a defense measure when a CBR attack is imminent.

CIRCLE WILLIAM fittings are marked with a black W inside a black circle are as follows:

- Doors to the pilot house, flag bridge, and signal shelter
- Ventilation systems to main and auxiliary machinery spaces, generator spaces, and other systems and fittings serving spaces in continuous use

If access to a space is through a series of hatches and/or scuttles, all of the closures that provide that access must bear the same classification as that of the space. For example, a pump room is classified as CIRCLE YOKE. This means it is open during condition XRAY and closed during condition YOKE. All hatches, scuttles, and/or doors that provide access to the pump room must also be classified CIRCLE YOKE to allow routine access to the pump room.

When a fan room door must be kept open to supply air to a fan or to exhaust air from it, the door should have the same classification as that of the fan. For example, a fan room containing a YOKE fan has a YOKE door; a room containing YOKE and ZEBRA fans has a ZEBRA door. All other fan room doors are classified XRAY.

A classification has no bearing on the security of a space. A space classified ZEBRA may, for security reasons, be locked during condition YOKE if the space is unattended. However, the locking must be reported to the DCA or to the OOD.

Table 3-2 contains additional information on damage control closures and their classifications.

Table 3-2. Damage Control Classifications

SYSTEM OR FITTING	XRAY	YOKE	ZEBRA	WILLIAM
Air escapes	Damage control voids not containing pressure piping.			Damage control voids containing pressure piping.
Air ports		All lens frames.	Dog Zebra: Metal covers.	
Air test fittings	All.			
Aviation fuel systems (gasoline and JP-5)	All valves.			
Compressed air	Valves to counter recoil ch arging to gunmounts, torpedo charging valves, cutout valves to other systems not serving W fittings, elevator pressure tanks, catapult machinery, diesel engine air starting tank and test sets; control valve at compressor to main; hose outlets; compartment testing valves.			All other valves.
Damage control ballast valves	All.			
Drainage	All valves in main and secondary drainage systems; bilge suction and overboard discharge valves in machinery spaces; miscellaneous drainage valves; portable submersible pump overboard discharge connections.		All deck drain valves, plug cocks, valves, scuppers, and vent valves for plumbing drains; gravity overboard discharge valves from unit coolers and air conditioning units.	Deck drains and flap valves from operating room.

Table 3-2. Damage Control Classifications (Continued)

SYSTEM OR FITTING	XRAY	YOKE	ZEBRA	WILLIAM
Firemain, flushing, and sprinkling systems	Valves not segregating into sections and not adversely affecting pressure in main risers; valves actuating main and bilge drainage eductors; sea suction valve in pump room; sprinkling group control valves; washdown system hose valves; submersible pump priming valves; fog foam valves; hangar sprinkling valves; water curtain valves and caps; caps for fixed fog systems. (NOTE: In case firemain and drainage valves are interlocked, firemain valve is X and drainage valve is unclassified.)	Valves for segregation of firemain into port and starboard longitudinal sections, where practicable, and with two or more pumps supplying each section.	Valves for segregation of firemain into four or more sections; firemain valves to flushing system. Valves actuating drainage eductors from quarters; certain cooling water system valves.	All other firemain valves; valves to cooling water systems for vital machinery; sprinkling valves controlled by group valves; sea suction valves for fire pumps in machinery spaces and overboard discharge from gasoline tank.
Fresh water	Filling connection valves.		Root valves above machinery spaces.	Drinking fountains for machinery spaces; gun barrel and rocket launches cooling systems; all other valves unclassified.
Oil and ballast systems (fuel and JP-5 filling, transfer, and overflow systems)	All valves, except interlocking valves and those in way of pump, which shall be unclassified.			
Sounding tube deck plates and valves for voids, oil and water tanks	All.			

Table 3-2. Damage Control Classifications (Continued)

SYSTEM OR FITTING	XRAY	YOKE	ZEBRA	WILLIAM
Ventilation		Windlass and flammable material spaces.	Shaft alley, workshops, living spaces, washrooms, workspaces such as commissary, and utility spaces, issue rooms, rain clothes, athletic gear, chart and registered publication space; storerooms with heat piping. Circle Zebra to galley and one water closet forward and aft.	Circle W for machinery spaces, catapult spaces, pump rooms, aviation fuel maintenance shop, stowage battery shop, generator spaces. Vital spaces if not air conditioned. Controllable fire dampers.
Recirculating air conditioning			Same as ventilated spaces.	Steering gear, control spaces, medical spaces, squadron ready rooms, aviation suit drying rooms, and machinery enclosed operating station missile spaces.
Blow-out vent	Conventional ammunition spaces and storerooms. Circle XRAY for shaft alley, nuclear weapons, liquid propellants and toxic chemical agent spaces, and magazine shops.			
Replenishment air			Vital spaces and quarters.	Ready rooms.
Voice tubes and message passing facilities	All.			
Miscellaneous AT and WT covers			All.	

When material conditions of readiness are being set, the ship's first concern is the requirement for watertight, airtight, fire-tight, and fume-tight integrity. Living conditions and access to spaces are secondary requirements. During long periods at GQ stations, however, condition ZEBRA may, with the commanding officer's permission, be relaxed to pass battle rations and to allow the crew to use the head facilities. The opening of certain weather deck doors permits natural ventilation to replace the stuffiness at some GQ stations with fresh air. Condition YOKE may also be modified in a similar manner when appropriate.

REVIEW QUESTIONS

Q13. What material condition of readiness provides the least amount of protection?

1. ZULU
2. ZEBRA
3. YOKE
4. XRAY

Q14. The three material conditions of readiness are XRAY, YOKE, and ZEBRA.

1. True
2. False

Q15. What material condition is set to isolate and control fires and flooding when the ship is not at general quarters station?

1. ZULU
2. ZEBRA
3. YOKE
4. XRAY

Q16. Fittings having what classification are kept open during all material conditions?

1. CIRCLE XRAY
2. DOG ZEBRA
3. CIRCLE YOKE
4. WILLIAM

Q17. What classification of fitting may be opened without special authorization when proceeding to battle stations or as required in routine inspection checks?

1. CIRCLE ZULU
2. CIRCLE ZEBRA
3. CIRCLE XRAY
4. CIRCLE YOKE

COMPARTMENT CHECKOFF LISTS

Learning Objective: Recall the purpose of the compartment checkoff list (CCOL) and the type of information listed on it.

CCOLs (fig. 3-17) provide an itemized listing of all classified fittings and closures used in damage control to set the specified material condition of readiness. They are originally prepared and furnished by the ship builder's design agent during the construction of a ship or class of ships. After that it is each ship's responsibility to keep the lists current. Follow the guidelines listed in the *Naval Ships' Technical Manual* (*NSTM*), chapter 079, volume 2, when you check and update your CCOLs.

All compartments must have a CCOL permanently posted within them in clear view of the space access. Weather deck areas that have damage control facilities must also have a CCOL posted. The compartment name and number are entered on the list along with all classified fittings and certain other damage control facilities in the compartment that are necessary to help damage control personnel in the performance of their duties. The information listed for each of the classified fittings includes the following:

- Name of item
- Number of item
- Location of item
- Purpose of item
- Classification of item (if classified)
- Division responsible for the proper operation of each fitting

When a compartment has more than one entrance, duplicate CCOL must be posted at each entrance. The CCOLs shall be clearly labeled DUPLICATE. Partial CCOLs may be desirable when there are alcoves or areas included within a compartment. The partial CCOL list shall be clearly labeled PARTIAL. The item numbers on the partial list must correspond with the numbers on the original list.

CCOLs for the weather decks, and some other decks, may be divided by sections; for example, main deck, frame 90-120, port side. The DCA maintains a master copy of each original and partial CCOL on file in DCC. The division officer is responsible for informing the DCA when a change is required and

COMPARTMENT CHECKOFF LIST

NAVSHIPS 9880/22 (REV. 2-67)

COMPARTMENT NO. 2-108-1-L **NAME:** CREWS Berthing (LSD Wing Wall)

ITEM	FITTING	NUMBER	LOCATION AND PURPOSE	CLASSIFICATION	DIVISION RESPONSIBLE
	ACCESS				
1	WT door	2-108-1	Access to 2-96-1-L	Z	REP III
2	WT door	2-129-3	Access to 2-120-1-L	X	REP III
3	WT hatch	2-108-1	Access to 3-108-1-L	X	S
	MISCELLANEOUS CLOSURES				
4	ATC	2-108-1	In WITH 2-108-1 used to test: 3-108-1-L 3-103-3-A 3-115-1-A	X	E
5	ATC	2-108-1	In WTD 2-108-1 used to test: 2-95-1-L	X	E
	DRAINAGE				
6	Deck socket (remote)	2-112-1	Bilge eductor overboard discharge valve 5-112-1	X	M
7	STC	2-118-1	Sound Ball 6-108-1-W	X	R
8	Gagged scupper	2-109-1	Plumbing drain from 1-110-1-L	Z	REP III
	FIREMAIN AND SPRINKLING SYSTEM AND WASH DOWN				
9	FMCOV	2-109-1	Cut out to FP 1-109-1	W	REP III
10	FMCOV	2-110-1	Cut out to Group IV magazine sprinkler	W	REP III
	FUEL OIL				
11	STC	2-116-1	Sound F.O. and ball. 6-108-3-F	X	B
	REMOTE OPERATION				
12	Remote start/stop switch	2-119-1	For exhaust blower 2-108-1	Z	REP III
	MISCELLANEOUS UNCLASSIFIED				
13	Loud speaker		General announcing 1 MC		
14	C.P. riser terminal	2-114-1	Casualty power outlet		
15	15 lb. CO_2	2-119-1	Portable fire extinguisher		
16	One OBA		In box at Fr. 110 stbd.		

Figure 3-17. Compartment checkoff list.

use of CCOL software is required as available per the requirements of *NSTM*, chapter 079, chapter 2.

Other responsibilities assigned ship personnel are as follows:

- Division officers are responsible for maintaining the list in good physical condition.
- The commanding officer, assisted by the DCA, is responsible for filling in the column marked DIVISION RESPONSIBILITY.
- The divisions concerned are responsible for securing fittings that are classified as XRAY or YOKE.
- The ship's repair parties are responsible for securing ZEBRA fittings.

REVIEW QUESTIONS

Q18. All compartments must have a CCOL permanently posted within them in clear view of the space access.

1. True
2. False

Q19. When a compartment has more than one entrance, duplicate CCOLs must be posted at each entrance.

1. True
2. False

DAMAGE CONTROL CLOSURE LOG

Learning Objective: Recall the purpose of the damage control closure log and how to use it correctly.

All ships are required to prepare and maintain a damage control closure log (fig. 3-18). To complete your General Damage Control PQS, you are required to know what the damage control closure log is and how to use it correctly. Strict discipline must be maintained in the modification of a material condition of readiness. As mentioned before, you must obtain permission before you change a material condition setting in any way. Obtain the permission from the DCA or the OOD. During GQ, repair party officers control the opening and closing of all fittings in their assigned areas. The repair party officers must keep DCC informed so the ship's damage control closure log can be kept up-to-date.

The closure log is maintained at all times, whether the ship is in port or underway. The closure log is used to show the following:

- Where the existing material condition of readiness has been modified.
- The fitting's type, number, and classification.
- The name, rate, and division of the person who requested permission to open or close the fitting.
- The date and time the fitting was opened or closed.
- The date and time the fitting was returned to its specified material condition of readiness setting.
- The name and rate/rank of the person granting permission.

D.C. CLOSURE LOG
IN ACCORDANCE WITH OPNAVINST 3120.32

PERSON REQUESTING PERMISSION			IDENTIFICATION OF FITTING			OPENED		CLOSED			PERSON GRANTING PERMISSION	
NAME	RATE	DIV	TYPE	CLASSIFI-CATION	NUMBER	DATE	TIME	DATE	TIME	EST TIME OPEN	NAME	RANK OR RATE
Trulson	DC2	R	WTH	X	4-75-1	06/02/01				24 hrs.	James Watson	DC1

Figure 3-18. Damage Control Closure Log record sheet.

The commanding officer prescribes the limit to which the DCA or OOD may approve the modification of a material condition of readiness. Reporting the temporary closing of a fitting that should be open is just as important as reporting the opening of one that should be closed. For example, a ZEBRA watertight hatch that is secured at the time GQ is sounded could seriously interfere with personnel trying to get to their battle stations.

The damage control closure log is normally kept on the quarterdeck in port, on the bridge at sea, and in DCC during GQ. However, if your ship has a 24-hour watch in DCC at all times, the closure log will be kept there no matter where the ship is. The closure log is updated when there is a change in the status of a classified closure or fitting. If a classified closure is to remain open for several days, it must be logged open each day. The maximum time a closure or fitting may be logged open is 24 hours.

You must keep all closures and fittings in the best possible condition at all times to maintain the ship's watertight integrity feature. Neglected closures and fittings could lead to the loss of your ship.

REVIEW QUESTIONS

Q20. What person prescribes the limit to which the DCA or OOD may approve the modification of a material condition of readiness?

1. Executive officer
2. Damage control supervisor
3. Damage control assistant
4. Commanding officer

Q21. The closure log is maintained at all times, whether the ship is in port or underway.

1. True
2. False

Q22. The maximum time a closure or fitting may be logged open is 24 hours.

1. True
2. False

METHODS OF CHECKING WATERTIGHT INTEGRITY

Learning Objective: Recall the procedures for checking watertight integrity.

Watertight integrity features are built into naval ships. There must be regular inspections conducted on the ship and its watertight integrity features. The ship's Planned Maintenance System (PMS) gives specific details for conducting the compartment tests and inspections. The *Naval Ships' Technical Manual* (*NSTM*), chapter 079, volume 4, also covers various compartment tests and inspections. The ship's schedule of watertight integrity tests and inspections is maintained in the ship's damage control library. Refer to the above references when you schedule and conduct the required tests and inspections.

VISUAL INSPECTION

Often you can discover holes or cracks in watertight bulkheads and decks by conducting a thorough visual inspection. If a compartment contains oil, water, or some other liquid, any leakage will be evident. Other sources for leakage include loose rivet heads, poorly caulked plate laps or stiffeners, and poorly caulked bounding angles. All leaks should be repaired as soon as possible to re-establish the ship's watertight integrity. If the repairs are beyond the capability of the ship's force repair personnel, the work should be included in the work package for the next shipyard, tender, or repair ship availability.

You will, at specified intervals, conduct a visual inspection for light leaks within most compartments on the ship. To make this inspection, completely close off the compartment and secure all lighting within the compartment. Have another person (an observer) stay inside the darkened compartment to look for light leaks. Then you will need to ensure that lighting is on in the surrounding spaces. As a rule, the light from the surrounding compartments will allow the observer to locate any serious defects. However, you might need to use portable lights to provide a higher level of illumination in some areas. The observer will also need a portable light to transit the darkened space safely.

COMPARTMENT AIR TEST

The ship's schedule of watertight integrity tests and inspections is issued by NAVSEA for each ship. This schedule contains information on each watertight compartment and the type of test used to determine the compartment's tightness. Compartments designated for air testing are scheduled so all are tested once every 18 months for ships at least 12 years old. For ships that are less than 12 years old, the compartments are tested once every 36 months. Compartments that are

designated for air testing are provided with fittings for attaching the air test set. In the case of tanks, you may use sounding tubes or air escapes to connect the air test set. Figure 3-19 shows the air test set that is provided for shipboard use. The manufacturer's technical manual, provided with each set, gives detailed instructions for operating the air test set.

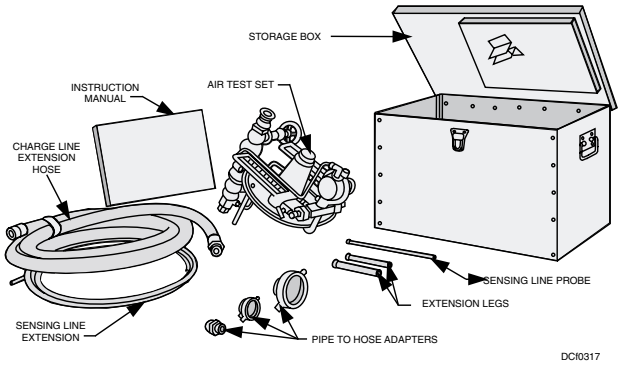

Figure 3-19. Air test set.

The information contained in the ship's schedule of watertight integrity tests and inspections must be strictly adhered to when conducting compartment air tests. The air test pressure listed in the schedule must NEVER be exceeded. You can seriously damage the structures and boundaries of the compartment being tested if the recommended pressure is exceeded.

Before starting an air test, you need to conduct a visual inspection of the compartment and repair all the leaks that you find. Notify the engineer officer, the DCA, and the OOD of your intent to conduct a compartment air test and which compartments will be involved. Also, have an Electrician's Mate (EM) assist in de-energizing the electrical push-button alarms and remote-controlled valves for sprinkling, flooding, or counterflooding systems if any are installed in the compartment to be tested. These devices have diaphragm covers and would be activated when the air test pressure is admitted to the compartment unless they had been previously de-energized.

All fittings that serve the compartment must be secured or blanked off before the air test is conducted. If any rotating shafts or other moving parts penetrate the bulkheads, you must tighten the packing before conducting the air test to maintain the air pressure.

Make sure that the crew is aware of the compartment air test being conducted. Post signs at every possible access to the compartment(s) being tested. If an observer is stationed inside the compartment during the compartment air test, each access to the compartment must have someone posted at the access closure. The guards are to prevent the access closure from being opened until the excessive pressure within the compartment is relieved. The air test pressure used in a compartment air test is relatively low. However, a dangerous total force can be developed on quick-acting doors and hatches. Personnel should be instructed not to attempt to open quick-acting doors or hatches when a compartment is under air test. A person opening these doors or hatches while the compartment is under pressure could likely sustain severe injuries.

When conducting a compartment air test on a large compartment, use as many personnel as required to check for leaks. The personnel involved with the test need to maintain communication with each other. The X40J (salt and pepper or international orange) rig can be used, allowing you to have an isolated circuit without interruptions. When you are conducting a compartment air test, any loss of pressure in excess of the allowable drop listed in the schedule over the specified period of time indicates deterioration of the watertight integrity of the compartment. If corrective measures are beyond the capacity of ship's force, the compartment must be listed as UNSATISFACTORY. You must then request that repairs be completed during the next availability.

While the compartment is under test, leaks will be disclosed by hissing or whistling noises as the air escapes. All leaks should be located, marked, and listed for corrective action. You should repair all leaks that were found and then test the compartment again. If the allowable pressure drop is again exceeded on this test, apply a soap solution to the boundaries of the compartment and to all joints, fittings, and closures. When the air pressure is applied, bubbles will be formed by escaping air, thus indicating the location of the leaks.

The observer inside the compartment will have a lighted candle. As the observer goes over areas where leaks are suspected, the deflection of the flame will indicate the location of leaks.

Upon completion of the compartment air test, relieve the air pressure in the compartment. Be sure that all caps for the air test fittings are replaced. These caps are classified XRAY. Ensure that all temporary closures are removed from overflows, air escapes, and air vents in magazines and fuel oil tanks. The boundaries are sure to be ruptured when the space is filled or flooded if these vents and escapes are left closed. Then make the appropriate entries in the watertight integrity log if your ship has one.

VENTILATION

Ventilation onboard ship provides comfort for the crew in their work area or berthing space. It is also used to keep electronic spaces cool. Ventilation is used to circulate air throughout the ship, and to maintain different climates and comfort zones in various areas. Quite obviously the air circulating through the ship's chillbox is maintained at a different temperature and humidity than the climate in berthing areas. Many areas of the ship contain sensitive electronic equipment that will fail if not kept properly cooled. Just as obviously, you and your shipmates cannot perform your jobs efficiently if your work environment is uncomfortable.

A variety of ventilation heaters and pre-heaters are used to warm the air coming into the ship, and air-conditioning systems and coolers are used to cool the air where necessary. Ventilation ducting and dampers are used to route the airflow where needed. Thermostats are used to monitor and maintain the appropriate temperatures. Air filters are used to filter particles such as dust from the air to keep air cleaner. It may be necessary for you to clean, inspect, lubricate, or repair or replace components of this vital system at any given time.

REVIEW QUESTIONS

Q23. When conducting a compartment test and inspection, you should follow the specific details provided in which of the following references?

1. Ship's watertight test instructions
2. Ship's damage control book
3. Planned Maintenance System (PMS)
4. *NSTM*, chapter 79, volume 1

Q24. The ship's schedule of watertight integrity tests and inspections is issued by NAVSEA.

1. True
2. False

Q25. The information contained in the ship's schedule of watertight integrity tests and inspections must be strictly adhered to when you are conducting compartment air tests.

1. True
2. False

SUMMARY

In this chapter, you were introduced to ship compartmentation, material conditions of readiness, the CCOL, and the damage control closure log, along with the relationship of each to watertight integrity. As a Damage Controlman, you will use the information learned in this chapter in the daily performance of your duties. You need to have a good understanding of each topic that has been discussed. If you did not understand any of these topics, go back and review them before you move on to the next chapter.

REVIEW ANSWERS

A1. The keel is the backbone of the ship. **(1) True**

A2. What is the forward edge of the stem called? **(4) Cutwater**

A3. The vertical distance from the keel to the waterline of a ship is known by what term? **(1) Draft**

A4. The first level above the main deck is called the 02 level. **(2) False. The first level above the main deck is called the 01 level.**

A5. Compartmentation is the design factor on a ship that allows for more effective control of fires and floods. **(1) True**

A6. Each compartment has a four-part number separated by hyphens. **(1) True**

A7. Compartments completely to starboard are given odd numbers. **(1) True**

A8. The last part of the compartment number is the letter that identifies the **(1) primary use of the compartment**

A9. What type of door provides access to a compartment that is not often used? **(4) Individually dogged watertight door**

A10. The watertight integrity of a naval ship is established when the ship is built. **(1) True**

A11. What types of watertight closures are installed in interior and exterior areas where rapid access or egress is required? **(3) Raised watertight hatch with scuttle**

A12. A successful chalk test does not guarantee a closure is watertight, but it does provide a reasonable assurance of watertight integrity. **(1) True**

A13. What material condition of readiness provides the least amount of protection? **(4) XRAY**

A14. The three material conditions of readiness are XRAY, YOKE, and ZEBRA. **(1) True**

A15. What material condition is set to isolate and control fires and flooding when the ship is not at general quarters stations? **(2) ZEBRA**

A16. Fittings having what classification are kept open during all material conditions? **(4) WILLIAM**

A17. What classification of fitting may be opened without special authorization when proceeding to battle stations or as required in routine inspection checks? **(3) CIRCLE XRAY**

A18. All compartments must have a compartment checkoff list permanently posted within them in clear view of the space access. **(1) True**

A19. When a compartment has more than one entrance, duplicate compartment checkoff lists must be posted at each entrance. **(1) True**

A20. What person prescribes the limit to which the DCA or OOD may approve the modification of a material condition of readiness? **(4) Commanding officer**

A21. The closure log is maintained at all times, whether the ship is in port or underway. **(1) True**

A22. The maximum time a closure or fitting may be logged open is 24 hours. **(1) True**

A23. When conducting a compartment test and inspection, you should follow the specific details provided in which of the following references? **(3) Planned Maintenance System (PMS)**

A24. The ship's schedule of watertight integrity tests and inspections is issued by NAVSEA. **(1) True**

A25. The information contained in the ship's schedule of watertight integrity tests and inspections must be strictly adhered to when you are conducting compartment air tests. **(1) True**

CHAPTER 4

FIRE-FIGHTING FUNDAMENTALS

Learning Objective: Recall the components of the "fire triangle," the classifications of fires, the fundamentals of extinguishing fires, and the different extinguishing agents used.

Fire is a constant potential hazard aboard ship. You must take all possible measures to prevent fires from starting. If a fire does start, you must immediately report the fire to the officer of the deck and then extinguish it rapidly. Often a fire will start in conjunction with other damage caused by enemy action, storms, or an accident. A fire can cause more damage than the initial casualty if not immediately extinguished. In fact, a fire could cause the loss of a ship even after the original damage has been repaired or minimized. A Damage Controlman has to know how to identify the different classes of fires, how to extinguish them, and how to use and maintain fire fighting systems and equipment. The more you learn, the more you will be able to contribute to the safety of your ship effectively.

This chapter covers the fundamentals of fire fighting. These fundamentals include the components of fire, classification of fires, the effects of fire, the fundamentals of extinguishing fires, and the extinguishing agents used.

FIRE COMPONENTS

Learning Objective: Recall the components of the "fire triangle."

Three components are required for a fire. They are a combustible material, a sufficiently high temperature, and a supply of oxygen. Known as the "fire triangle" (fig. 4-1), these three components are simply referred to as follows:

- Heat
- Fuel
- Oxygen

Fires are generally controlled and extinguished by eliminating one side of the fire triangle; that is, if you remove either the fuel, heat, or oxygen, you can prevent or extinguish a fire. For more details on flaming combustion requirements, refer to *Naval Ships' Technical Manual* (*NSTM*), chapter 555, volume 1.

HEAT

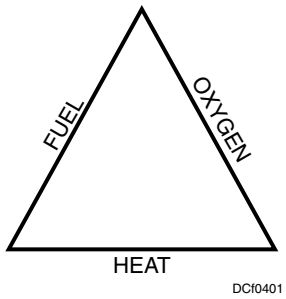

Figure 4-1. The fire triangle.

Fire is also called combustion. Combustion is a rapid chemical reaction that releases energy in the form of light and noticeable heat. Most combustion involves rapid OXIDATION, which is the chemical reaction by which oxygen combines chemically with the elements of the burning substance. Even when oxidation proceeds slowly, such as a piece of iron rusting, a small amount of heat is generated. However, this heat usually dissipates before there is any noticeable rise in the temperature of the material being oxidized.

With certain types of materials, slow oxidation can turn into fast oxidation if heat is not dissipated. This phenomenon is known as "spontaneous combustion" and results in a fire. Therefore, materials identified as subject to spontaneous combustion are normally stowed in a confined space where the heat can be dissipated rapidly. Materials, such as rags or papers that are soaked with animal fat, vegetable fats, paints, or solvents, are particularly subject to spontaneous combustion.

For a combustible fuel or substance to catch on fire, it must have an ignition source and be hot enough to burn. The lowest temperature at which a flammable substance gives off vapors that will burn when a flame or spark is applied is known as the FLASH POINT. The temperature at which a fuel will continue to burn after it has been ignited is known as the FIRE POINT. The fire point is usually a few degrees higher than the flash point. The AUTO-IGNITION or SELF-IGNITION POINT is the lowest temperature to which a substance must be heated to give off vapors that will burn without the application of a spark or flame. In other words, the

auto-ignition point is the temperature at which spontaneous combustion occurs. The auto-ignition point is usually at a much higher temperature than the fire point. The range between the smallest and the largest amounts of vapor in a given quantity of air that will burn or explode when ignited is called the FLAMMABLE RANGE or the EXPLOSIVE RANGE. For example, let's say that a substance has a flammable or explosive range of 1 to 12 percent. This means that either a fire or an explosion can occur if the atmosphere contains more than 1 percent but less than 12 percent of the vapor of this substance. In general, the percentages referred to in connection with flammable or explosive ranges are percentages by volume.

FUEL

Fuels take on a wide variety of characteristics. A fuel may be a solid, liquid, or even a vapor. Some of the fuels you will come into contact with are rags, paper, wood, oil, paint, solvents, and magnesium metals. This is by no means a complete list, but only examples.

OXYGEN

The oxygen side of the fire triangle refers to the oxygen content of the surrounding air. Ordinarily, a minimum concentration of 15 percent oxygen in the air is needed to support flaming combustion. However, smoldering combustion can take place in an atmosphere with as little as 3 percent oxygen. Air normally contains about 21 percent oxygen, 78 percent nitrogen, and 1 percent other gases, principally argon.

REVIEW QUESTIONS

Q1. A rapid chemical reaction that releases energy in the form of light and noticeable heat is known as combustion.

1. True
2. False

Q2. The lowest temperature at which a flammable substance gives off vapors that will burn when a flame or spark is applied is known by what term?

1. Combustion point
2. Fire point
3. Flame point
4. Flash point

Q3. The temperature at which a fuel will continue to burn after it has been ignited is known by what term?

1. Combustion point
2. Fire point
3. Flame point
4. Flash point

FIRE CLASSIFICATIONS

Learning Objective: Recall the different classifications of fires.

Fires are classified according to the nature of the combustibles (or fuels) involved, as shown in table 4-1. The classification of any particular fire is of great importance since it determines the manner in which the fire must be extinguished. Fires are classified as being either class ALPHA, class BRAVO, class CHARLIE, or class DELTA fires as follows:

- Class ALPHA (A) fires are those that occur in such ordinary combustible materials as wood, cloth, paper, upholstery, and similar materials. Class A fires are usually extinguished with water, using high or low velocity fog or solid streams. Class A fires leave embers or ashes and must always be overhauled.

- Class BRAVO (B) fires are those that occur in the vapor air mixture over the surface of flammable liquids, such as gasoline, jet fuels, diesel oil, fuel oil, paints, thinners, solvents, lubricating oils, and greases. Aqueous film-forming foam (AFFF), Halon 1211, Halon 1301, or dry chemical Purple-K-Powder (PKP) can be used to extinguish class B fires. The agent used will depend upon the circumstances of the fire.

- Class CHARLIE (C) fires are those which occur in electrical equipment. Nonconducting extinguishing agents, such as PKP, Carbon dioxide, and Halon 1211, are used to extinguish class C fires. CO_2 and Halon 1211 are preferred because they leave no residue.

- Class DELTA (D) fires occur in combustible metals, such as magnesium, titanium, and sodium. Special techniques have been developed to control this type of fire. If possible, you should jettison the burning material overboard. Most class D fires are fought by applying large amounts of water on the burning material to cool it down below its ignition temperature. However, a magnesium fire can be smothered by covering it with a large volume of dry sand.

Table 4-1. Fire Classifications

FIRE CLASSIFICATION	EXAMPLES OF TYPES OF MATERIAL	TYPE OF EXTINQUISHER
ALPHA	Wood, paper, cloth, upholstery	Water
BRAVO	Flammable liquids, such as gasoline, jet fuel, paint, oil, grease	AFFF, Halon 1301, PKP, CO_2, water fog
CHARLIE	Electrical equipment and wiring	CO_2 and Halon 1211 are preferred; PKP can be used
DELTA	Combustible metals, such as magnesium, titanium, and sodium	Jettison from ship, large volumes of water and sand

REVIEW QUESTIONS

Q4. What class of fire occurs in combustible metals, such as magnesium, titanium, and sodium?

1. ALPHA
2. BRAVO
3. CHARLIE
4. DELTA

Q5. Class ALPHA (A) fires leave embers or ashes and must always be overhauled.

1. True
2. False

Q6. What type of fire occurs in electrical equipment?

1. ALPHA
2. BRAVO
3. CHARLIE
4. DELTA

Q7. What type of fire occurs in the vapor-air mixture over the surface of flammable liquids?

1. ALPHA
2. BRAVO
3. CHARLIE
4. DELTA

THE EFFECTS OF FIRE

Learning Objective: Recall the effects of fire.

A burning substance produces a number of chemical reactions. These reactions produce flames, heat, smoke, and number of gases and other combustion products. The gases and combustion products will reduce the amount of oxygen available for breathing. All of these effects are vitally important to you as a fire fighter. You must be prepared to protect yourself against them.

FLAME, HEAT, AND SMOKE

Personnel must be protected from the flames, heat, and smoke to avoid injuries or loss of life. Before you enter a compartment or area where there is a fire, you need to be dressed out properly. You must tuck your pants into your socks, button the collar on your shirt, and put on a helmet. Wear any other protective clothing prescribed by current directives. If you are a nozzleman or hoseman, you will also need to wear protective gloves and an oxygen breathing apparatus (OBA). The flames and heat from a fire can be intense. However, if you are dressed out properly and maintain adequate distance, you can minimize your chances of getting burned. The smoke will make it hard to see and breathe. However, you can cope with these problems by wearing an OBA and a headlamp.

GASES

Some of the gases produced by a fire are toxic (poisonous). Other gases, although nontoxic, are dangerous in other ways. We will discuss briefly some of the more common gases that are associated with fires.

Carbon Monoxide

A fire produces carbon monoxide (CO) when there is not enough oxygen present for the complete combustion of all of the carbon in the burning material. CO is a colorless, odorless, tasteless, and nonirritating gas. However, it can cause death even in small concentrations. A person who is exposed to a concentration of 1.28 percent CO in air will become unconscious after two or three breaths. They will probably die in 1 to 3 minutes if left in the area. CO also has a wide explosive range. If CO is mixed with air in the amount of 12.5 to 74 percent by volume; an open flame or even a spark will set off a violent explosion.

Carbon Dioxide

Carbon dioxide (CO_2) is produced by a fire when there is complete combustion of all of the carbon in the burning material. CO_2 is a colorless and odorless gas. Although CO_2 is not poisonous, unconsciousness can result from prolonged exposure at 10 percent volume and higher. Above 11 percent volume, unconsciousness can occur in 1 minute or less. In a sufficient quantity, death could occur, since CO_2 does not provide any oxygen to breathe. The danger of asphyxiation should not be taken lightly; CO_2 does not give any warning of its presence, even when it is present in dangerous amounts. It does not support combustion and it does not form explosive mixtures with any substances. Because of these characteristics, CO_2 is very useful as a fire-extinguishing agent. It is also used for inerting fuel oil tanks, gasoline tanks, and similar spaces.

Hydrogen Sulfide

Hydrogen sulfide (H_2S) is generated in some fires. It is also produced by the rotting of foods, cloth, leather, sewage, and other organic materials. H_2S can be produced within 6 to 12 hours. Use caution when fighting fires around sewage systems and in spaces where there has been a sewage spill. H_2S is a colorless gas that smells like rotten eggs. Air that contains 4.3 to 46 percent H_2S is violently explosive in the presence of a flame. H_2S is extremely poisonous if breathed, even in concentrations as low as 20 parts per million (ppm). You may rapidly become unconscious, stop breathing, and possibly die after one breath in an atmosphere that contains 1,000 to 2,000 ppm of H_2S.

INSUFFICIENT OXYGEN

A fire in a closed compartment may cause an inadequate supply of oxygen for breathing. An enormous amount of oxygen is used by the fire itself, leaving relatively little oxygen to breathe. The amount of oxygen normally present in the air is 20.8 percent. You breathe and work best with this amount of oxygen. When a space is suspected of having an insufficient amount of oxygen, wear an OBA. Keep the OBA on until atmospheric tests show that oxygen content is at least 20 percent and no more than 22 percent by volume.

REVIEW QUESTIONS

Q8. A fire produces carbon monoxide (CO) when there is not enough oxygen present for the complete combustion of all of the carbon in the burning material.

1. True
2. False

Q9. A fire produces carbon dioxide (CO_2) when there is complete combustion of all of the carbon in the burning material.

1. True
2. False

Q10. Under normal conditions, oxygen accounts for what percentage of the chemical composition of air?

1. 10.5%
2. 20.8%
3. 30.2%
4. 40.1%

FIRE EXTINGUISHMENT

Learning Objective: Recall the fundamentals of fire extinguishing.

In general, fires may be extinguished by removing one side of the fire triangle (fuel, heat, or oxygen) or by slowing down the rate of combustion. The method or methods used in any specific instance will depend upon the classification of the fire (table 4-1) and the circumstances surrounding the fire.

REMOVING FUEL

Although it is not usually possible to remove the fuel to extinguish a fire, there may be circumstances in which it is possible. If part of the fuel that is near or actually on fire can safely be jettisoned over the side, do so as soon as possible. Damage control parties must

stand ready at all times to shift combustibles to safe areas. Take whatever measures possible to keep additional fuel away from the fire. In particular, immediately close supply valves in fuel oil, lube oil, and JP-5 lines.

REMOVING HEAT

The fire will go out if you can remove enough heat by cooling the fuel to below temperature at which it will support combustion. Heat may be transferred in three ways as follows:

1. By radiation
2. By conduction
3. By convection

In the process known as radiation, heat is radiated through the air in all directions. Radiated heat is what causes you to feel hot when you stand near an open fire. In conduction, heat is transferred through a substance or from one substance to another by direct contact from molecule to molecule. Therefore, a thick steel bulkhead with a fire on one side can conduct heat from the fire and transfer the heat to the adjoining compartments. In convection, the air and gases rising from a fire are heated. These gases can then transfer the heat to other combustible materials that are within reach. Heat transferred by convection is a particular danger in ventilation systems. These systems may carry the heated gases from the fire to another location several compartments away. If there are combustibles with a low flash point within a compartment served by the same ventilation system, a new fire may start.

To eliminate the heat side of the fire triangle, cool the fire by applying something that will absorb the heat. Although several agents serve this purpose, water is the most commonly used cooling agent. Water may be applied in the form of a solid stream, as a fog, or used together with aqueous film-forming foam (AFFF).

CONTROLLING OXYGEN

Oxygen is the third component of the fire triangle. Oxygen is difficult to control because you obviously cannot remove the oxygen from the atmosphere that normally surrounds a fire. However, oxygen can be diluted or displaced by other substances that are noncombustible. For example, if a fire occurs in a closed space, it can be extinguished by diluting the air with carbon dioxide ($C0_2$) gas. This dilution must proceed to a certain point before the flames are extinguished. The point at which the dilution is enough to extinguish the fire can be reached faster if you quickly secure all ventilation systems to the space. In general, a large enough volume of $C0_2$ must be used to reduce the oxygen content to 15 percent or less.

REDUCING THE RATE OF COMBUSTION

Dry chemical fire extinguishing agents and Halon 1301 do not extinguish fires by cooling or smothering. Instead, they are believed to interrupt the chemical reaction of the fuel and oxygen. This action reduces the rate of combustion, and the fire is extinguished quickly.

Speed is very important in fire fighting. If you allow a fire to burn without confining or extinguishing it, the fire can spread rapidly. A small fire in a trash can may spread to other combustibles and become a large fire that could affect several compartments or even the whole ship. The cost of damage that may have originally been a few dollars could end up costing millions of dollars. Therefore, the ship's fire party must get to the scene with their equipment and start fighting the fire as soon as possible. Any delay that allows the fire to spread will make it more difficult to extinguish the fire with the personnel and equipment available.

REVIEW QUESTIONS

Q11. Which of the following processes is NOT a method of transferring heat?

1. Radiation
2. Conduction
3. Convection
4. Glaciation

Q12. Heat, fuel, and oxygen are the three components of the fire triangle.

1. True
2. False

EXTINGUISHING AGENTS

Learning Objective: Recall the different extinguishing agents used to extinguish fires.

The extinguishing agents commonly used by Navy fire fighters include the following:

- Water
- Aqueous film-forming foam (AFFF)
- Purple-K-Powder (PKP)

- Carbon Dioxide (CO_2)
- Halon 1301

The agent or agents that are used in any particular case will depend upon the classification of the fire and the general circumstances.

WATER

Water is a cooling agent, and onboard ship the sea provides an inexhaustible supply. If the surface temperature of a fire can be lowered below the ignition temperature of the fuel, the fire will be extinguished. Water is most efficient when it absorbs enough heat to raise its temperature to 212°F (100°C). At this temperature, the seawater will absorb still more heat until it changes to steam. The steam carries away the heat and results in the lowering of the temperature of the surface.

AQUEOUS FILM-FORMING FOAM (AFFF)

Foam is a highly effective extinguishing agent for smothering large fires, particularly those in oil, gasoline, and jet fuels. AFFF, also known as "light water," is a synthetic, film-forming foam designed for use in shipboard fire-fighting systems. The foam proportioning/injection equipment generates a white foam blanket. AFFF proportioning equipment is discussed in chapter 6 of this nonresident training course (NRTC).

AFFF is equivalent to seawater when it is used to extinguish class A fires. The unique action of AFFF stems from its ability to make a light water film float on flammable fuels. As foam is applied over the flammable liquid surface, an aqueous solution drains from the foam bubbles and floats out over the surface to provide a vapor seal. This aqueous film-forming action enhances extinguishment and prevents reflash, even when the foam blanket is disturbed. Fuels which have not been ignited may also be protected with this same action. AFFF can be used alone or in combination with Purple-K-Powder (PKP).

PURPLE-K-POWDER (PKP)

Dry chemical powders extinguish a fire by a rather complicated chemical mechanism. They do not smother the fire and they do not cool it. Instead, they interrupt the chemical reaction of the fire by suspending fine particles in the fire. In effect, the dry chemicals put a temporary screen between the heat, oxygen, and fuel and maintain this screen just long enough for the fire to be extinguished. Several types of dry chemicals have been used as fire extinguishing agents. For Navy use, the most important agent of this kind at present is potassium bicarbonate, also known as Purple-K-Powder (PKP). PKP is used to extinguish class B and class C fires because it is very effective against these fires. However, it is both corrosive and abrasive and should be used on class C fires only in emergencies. PKP is available in 18-pound and 27-pound portable extinguishers. PKP can be used in conjunction with AFFF. Portable PKP extinguishers and the special equipment for using PKP and AFFF together are described in chapter 5 of this NRTC.

CARBON DIOXIDE

Carbon dioxide (CO_2) is an effective agent for extinguishing fires by smothering them; that is, CO_2 reduces the amount of oxygen available for combustion. This smothering action is temporary and you must remember that the fire can quickly rekindle if oxygen is again admitted to the hot embers.

CO_2 is a dry, noncorrosive gas that is inert when in contact with most substances. It is heavier than air and remains close to the surface. CO_2 does not damage machinery or other equipment. Since it is a nonconductor of electricity, CO_2can safely be used to fight fires that might present electric shock hazards. However, the frost that collects on the horn of a CO_2 extinguisher does conduct electricity. Therefore, you should be careful and never allow the horn to come into contact with electrical components. Aboard ship, CO_2 fire extinguishing equipment includes 15-pound CO_2 extinguishers, 50-pound CO_2 hose and reel installations, and 50-poundCO_2 installed flooding systems. Although CO_2 is nonpoisonous, it is dangerous because it does not provide a suitable atmosphere for breathing. Asphyxiation can result from breathing CO_2; therefore, an oxygen breathing apparatus (OBA) must be worn when CO_2 is used below decks or in confined spaces.

HALON 1301

Halon 1301 is a colorless, odorless gas with a density approximately five times that of air. It does not conduct electricity or leave a residue. Halon 1301 is stored in compressed gas cylinders for shipboard use. This extinguishing agent is effective against class A, class B, and class C fires. The fires are not extinguished by smothering or cooling; instead, the chemical

reaction of the fire is interrupted similar to the result of using PKP.

Halon 1301 decomposes upon contact with flames that are approximately 900°F (482°C). For Halon 1301 to function effectively as an extinguishing agent, it must decompose. However, as it decomposes, several other products, such as hydrogen fluoride (HF) and hydrogen bromide (HBr), are formed. Both gases are irritating to the eyes, skin, and upper respiratory tract. Chemical burns are also possible. You should not stay in a space where Halon 1301 has been released unless you are wearing an oxygen breathing apparatus (OBA).

REVIEW QUESTIONS

Q13. Water is a cooling agent and the sea provides a ship an inexhaustible supply.

1. True
2. False

Q14. AFFF can be used alone or in combination with PKP.

1. True
2. False

Q16. Halon 1301 is a dense colorless and odorless gas that does not conduct electricity or leave a residue.

1. True
2. False

Q15. Dry chemical powders interrupt the chemical reaction of the fire by suspending fine particles in the fire. These particles put a temporary screen between the heat, oxygen, and fuel and maintain this screen just long enough for the fire to be extinguished.

1. True
2. False

SUMMARY

In this chapter, you were introduced to the fundamentals of fire fighting. We identified the three elements required to have a fire along with the classifications of fires. You should now be aware of the effects of fire and the different types of gases you may encounter while fighting a fire. Remember, no two fires are identical; you will have to determine the best method or extinguishing agent to use when fighting a fire. Safety is to be observed always.

REVIEW ANSWERS

A1. A rapid chemical reaction that releases energy in the form of light and noticeable heat is known as combustion. **(1) True**

A2. The lowest temperature at which a flammable substance gives off vapors that will burn when a flame or spark is applied is known by what term? **(4) Flash point**

A3. The temperature at which a fuel will continue to burn after it has been ignited is known by what term? **(2) Fire point**

A4. What class of fire occurs in combustible metals, such as magnesium, titanium, and sodium? **(4) DELTA**

A5. Class A fires leave embers or ashes and must always be overhauled. **(1) True**

A6. What type of fire occurs in electrical equipment? **(3) CHARLIE**

A7. What type of fire occurs in the vapor-air mixture over the surface of flammable liquids? **(2) BRAVO**

A8. A fire produces carbon monoxide (CO) when there is not enough oxygen present for the complete combustion of all of the carbon in the burning material. **(1) True**

A9. A fire produces carbon dioxide (CO_2) when there is complete combustion of all of the carbon in the burning material? **(1) True**

A10. Under normal conditions, oxygen accounts for what percentage of the chemical composition of air? **(2) 20.8%**

A11. Which of the following processes is NOT a method of transferring heat? (4) Glaciation

A12. Heat, fuel, and oxygen are the three components of the fire triangle. **(1) True**

A13. Water is a cooling agent and the sea provides a ship an inexhaustible supply. **(1) True**

A14. AFFF can be used alone or in combination with PKP. **(1) True**

A15. Dry chemical powders interrupt the chemical reaction of the fire by suspending fine particles in the fire. These particles put a temporary screen between the heat, oxygen, and fuel and maintain this screen just long enough for the fire to be extinguished. **(1) True**

A16. Halon 1301 is a dense colorless and odorless gas that does not conduct electricity or leave a residue. **(1) True**

CHAPTER 5

PORTABLE FIRE-FIGHTING AND DEWATERING EQUIPMENT

Learning Objectives: To recall the characteristics and operation of various types of portable fire extinguishers, oxygen breathing apparatus for fire fighters, shipboard dewatering equipment and portable fans and blowers.

Aboard ship, Sailors use portable fire extinguishers to extinguish fires in compartments or in the galley. A fire-fighter's ensemble provides protection for fire fighters, and the ensemble is enhanced by various types of oxygen breathing apparatus (OBA) for use when fire fighting or conducting gas-free testing or inspection. Additionally, dewatering equipment, which includes pumps and eductors, may have to be used when fighting fires along with other portable equipment, such as fans and blowers. The characteristics and operation of these types of equipment are presented in this chapter.

PORTABLE FIRE EXTINGUISHERS

Learning Objective: To recall the basic characteristics and operation of various types of portable fire extinguishers.

Portable fire extinguishers are used aboard all Navy ships, and the three types most often used are as follows:

- Dry chemical
- Carbon dioxide (CO_2)
- Aqueous film-forming foam (AFFF)

DRY CHEMICAL EXTINGUISHER

Portable dry chemical extinguishers (fig. 5-1) are used primarily on class BRAVO fires. Purple-K-Powder (PKP) is the chemical most often used in these extinguishers. The dry chemical dispensed from the extinguisher interrupts the chemical reaction producing a fire and this action stops combustion.

Dry chemical is also safe and effective for use on class CHARLIE fires; however, carbon dioxide is preferred because PKP fouls electrical and electronic components. Also, PKP should not be used on internal fires of gas turbines or jet engines unless absolutely necessary because it also fouls engines. PKP is not effective on class ALPHA fires and can only be used to knock down flames and keep the fire under control until an appropriate extinguisher can be used.

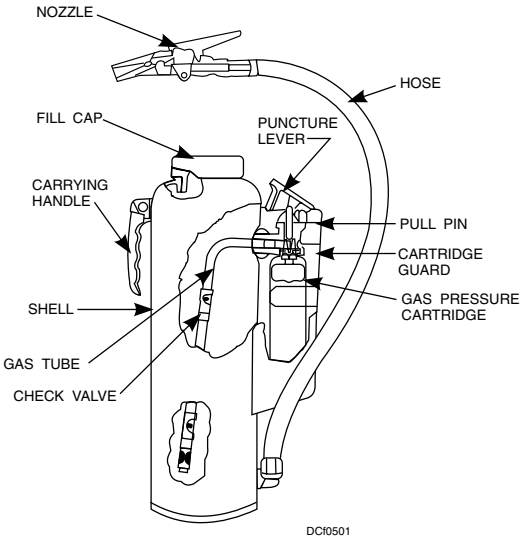

Figure 5-1. Portable dry chemical fire extinguisher.

PKP extinguishers come in an 18-pound and a 27-pound size. Most PKP extinguishers have a small CO_2 cartridge mounted on the outside of the extinguisher shell. This cartridge provides the propellant charge for the extinguisher. Do NOT pressurize the PKP extinguisher until you are ready to use it.

The steps of the procedure you should adhere to when operating a dry chemical extinguisher are as follows:

Step 1. Carry the extinguisher to the scene of the fire.

Step 2. Remove the seal and pull the locking pin from the puncture lever marked PUSH.

Step 3. Push the puncture lever down to penetrate the seal of the CO_2 cartridge. The extinguisher is now ready to use.

Step 4. Approach the fire from the windward side, if possible. Hold the extinguisher in one hand and the nozzle in the other hand.

Step 5. Discharge the dry chemical by squeezing the squeeze grip on the nozzle. Hold the nozzle firmly and direct the dry chemical at the base of the fire. Use a wide-sweeping motion from side to side. This will apply a dense, wide cloud of dry chemical over the area. Remember that the 27-pound extinguisher has a 21-foot range and the 18-pound extinguisher has a reach of 19 feet.

Step 6. Be certain that all of the fire in the area in which you are working is extinguished before you move in farther. If the fire appears to be too large or if there is a possibility of being outflanked or surrounded by flames, attack the fire with the assistance of two or more personnel using extinguishers.

Step 7. Do not try to economize on the dry chemical. Use as much as necessary (and as many extinguishers as necessary) to extinguish the fire completely.

Step 8. Always back up dry chemical with water or foam.

Step 9. After a dry chemical extinguisher has been used, invert the cylinder, squeeze the discharge lever of the nozzle, and tap the nozzle on the deck. This will release any pressure left in the cylinder and cartridge and any dry chemical left in the hose and nozzle. By inverting the cylinder, you prevent further discharge of dry chemical and conserve the powder. Make sure that dry chemical does not remain in the hose and nozzle; it will cake up and clog them.

The steps of the procedure you should adhere to when recharging a dry chemical extinguisher are as follows:

Step 1. Invert the extinguisher and tap the side of the cylinder with the nozzle to knock down any loose dry chemical. Then bleed off the pressure.

Step 2. Remove the fill cap.

WARNING

Do NOT lean over the top of the extinguisher when you remove the fill cap. If dry chemical splashes on you, it could cause severe injury to your skin and eyes.

Step 3. Fill the cylinder with dry chemical only to the bend in the tube. The extra space allows the powder to be aerated when the cylinder is pressurized. This ensures that the powder will not be caked when it is applied.

Step 4. Remove any dry chemical from the internal threads of the bottle and from the threads of the cap.

Step 5. Replace the fill cap.

The steps of the procedure you should adhere to when installing a new CO_2 cartridge are as follows:

Step 1. Lift the lever cutter assembly and insert the locking pin.

Step 2. Reseal the locking pin and cutter lever.

Step 3. Remove the guard covering the CO_2 cartridge.

Step 4. Unscrew the expended CO_2 cartridge.

Step 5. Remove the cap and gasket from a new CO_2 cartridge.

Step 6. Thread the new cartridge, which has left-hand threads, into the fitting of the cutter assembly.

Step 7. Replace the CO_2 cartridge guard.

AQUEOUS FILM-FORMING FOAM FIRE EXTINGUISHER

Portable aqueous film-forming foam (AFFF) fire extinguishers are used to provide a vapor seal over a small fuel spill, extinguish small class BRAVO fires (such as deep fat fryers), and for standing fire watch during hotwork.

The portable AFFF fire extinguisher (fig. 5-2) is a stainless steel cylinder containing 2 1/2 gallons of premixed AFFF concentrate and water. It is pressurized with air to 100 psi at 70° and weighs approximately 28 pounds when fully charged. The mixture will expand about 6.5 to 1 and will produce about 16 gallons of foam. The AFFF extinguisher has a 55-65 second continuous discharge time and an initial range of 15 feet, which decreases during discharge.

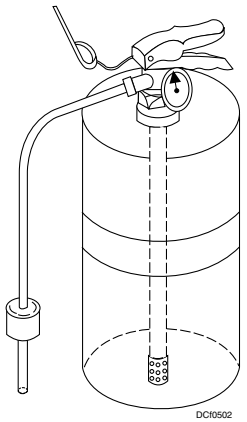

Figure 5-2. Portable aqueous film-forming foam fire extinguisher.

Some important facts you should remember about the operation and use of an AFFF extinguisher are as follows:

1. The AFFF extinguisher is designed for use on class BRAVO pool fires; however, it may also be used on class ALPHA fires. AFFF is NOT recommended for use on class CHARLIE fires (energized electrical components).

2. Before attacking a fire, ensure the pressure within the cylinder is within the proper range, and remove the locking pin. To operate, squeeze the operating lever above the carrying handle. The extinguisher is capable of continuous operation or multiple bursts.

3. AFFF extinguishes class ALPHA fires by cooling. It is superior to water because AFFF has added wetting and penetrating ability. For small class ALPHA fires, apply AFFF to the base (source) of the fire.

4. AFFF extinguishes a class BRAVO fire or protects an unignited fuel spill by floating on the flammable liquid and forming a vapor seal. One AFFF extinguisher will effectively extinguish 20 square feet (4 1/2 feet by 4 1/2 feet) of flammable liquid fire. To apply, start from 15 feet away and sweep the AFFF from side to side at the base of the fire. One AFFF extinguisher can be used to vapor seal a fuel spill to prevent a fire up to 40 square feet (about 6 feet by 6 feet) in size. Larger fuel spills, or spills which are not fully accessible or visible, should be covered using 1 1/2-inch AFFF hose or by the installed bilge sprinkling system.

5. Deep fat fryer fires often require special procedures to extinguish them. Combinations of AFFF and PKP may be needed to put out these fires and prevent their spread throughout the space or into ventilation ducting. AFFF should only be directed at the back wall of the fryer, allowing the stream to flow onto the surface of the burning oil. This technique does not disrupt the cooking oil and allows the fire to be put out and a layer of foam to be developed over the oil.

WARNING

Do not direct AFFF directly into hot cooking oil because doing so can result in immediate boiling of the AFFF. This violent boiling may result in hot cooking oil splashing out of the fryer onto fire fighters.

CARBON DIOXIDE FIRE EXTINGUISHER

The standard Navy CO_2 fire extinguisher (fig. 5-3) has a rated capacity (by weight) of 15 pounds of CO_2. Removing the locking pin and squeezing the release valve built into cylinder valve operates it. CO_2 extinguishers are primarily used on small electrical fires (class CHARLIE) and have limited effectiveness on class BRAVO fires.

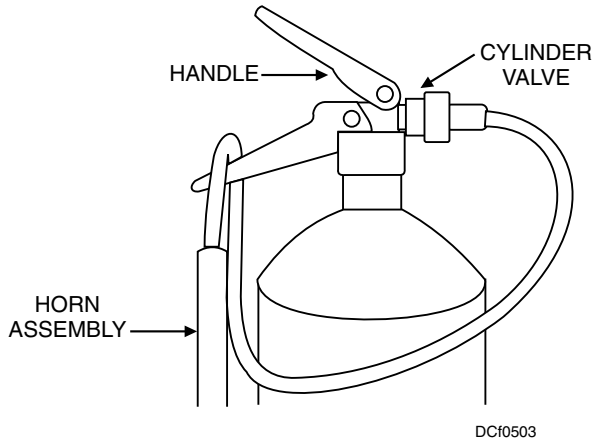

Figure 5-3. 15-pound carbon dioxide fire extinguisher.

The steps of the procedure you should adhere to for operating the CO_2 extinguisher are as follows:

Step 1. Carry the extinguisher in an upright position and get as close to the fire as possible.

Step 2. Place the extinguisher on the deck and remove the locking pin from the valve.

Step 3. Grasp the insulated handle of the horn. Rapidly expanding CO_2 causes the horn to become quite cold.

Step 4. Squeeze the operating lever to open the valve and release CO_2. Direct the CO_2 toward the base of the fire. The maximum range of a 15-pound CO_2 extinguisher is 4 to 6 feet from the outer end of the horn. In continuous operation, the 15-pound CO_2 extinguisher will be expended in approximately 40 seconds.

WARNING

Shock from static electricity can be avoided if you ground the cylinder to the deck when discharging CO_2.

Many ships have a CO_2 transfer unit to recharge the 15-pound cylinders from 50-pound CO_2 cylinders in a well-ventilated space. The CO_2 transfer unit (fig. 5-4) consists of an electric motor, a pump, a high-pressure hose, a control valve, adapters, and fittings. The transfer

unit is maintained according to the Planned Maintenance System (PMS) and with the manufacturer's instructions.

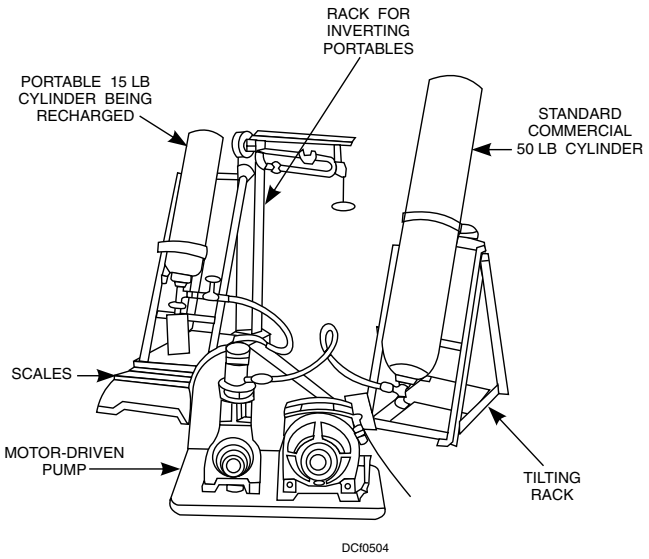

Figure 5-4. CO_2 transfer unit.

As a Damage Controlman, you may be required to clean, inspect, and lubricate the CO_2 transfer unit. You may also be involved in replacing components of the unit, testing as required, and in recharging CO_2 bottles.

Before operating the CO_2 transfer unit, you must ensure the switch on the side of the motor is in the OFF position. Check the circuit from which the motor is to be energized and make certain it is the same as that indicated in the nameplate on top of the motor. If a 220-volt, 60-cycle, single-phase current is available, the hookup of the motor leads should be arranged so the motor will operate in this circuit. A wiring diagram for operation on 220 volts is located on the motor nameplate. Check all CO_2 connections on both the inlet hose and outlet hose. (The 6-foot-long hose is the pump outlet hose.) Make certain that all connections between the fittings are tight. This is very important, because the CO_2 is stored under high pressure.

The steps of the procedure you should adhere to when operating the CO_2 transfer unit are as follows:

Step 1. With the transfer unit, scale, and tilt racks in place, check the supply cylinder. Use only the 50-pound commercial cylinders. The cylinder shall be inverted.

Step 2. Connect the pump inlet hose to the supply cylinder outlet. The connection adapter of the hose is fitted with a screen to prevent the entrance of any foreign matter into the transfer unit or into the cylinder being recharged. Do not open the supply cylinder valve.

Step 3. Place the empty cylinder on the scale. If a rack is used, invert the cylinder in a near vertical position; otherwise set it horizontally.

Step 4. Connect the pump outlet hose to the recharging adapter. The pump outlet hose is fitted with a shutoff valve. Check all connections to ensure that they are correct and secure. All connections should be made with a wrench, using a slow, steady pulling motion. Do not jerk the wrench and do not hit it with a hammer.

Step 5. After making certain that the shutoff valve in the pump outlet hose is tightly closed and the valve of the cylinder to be recharged is in the OPEN position, completely open the valve of the supply cylinder.

Step 6. Balance the scale and note the weight of the cylinder being recharged. When using beam-type scales, set the scale to the weight of the empty cylinder plus the desired charge.

Step 7. Open the shutoff valve in the pump outlet hose and allow the CO_2 in the supply cylinder to flow under its own pressure into the cylinder being recharged.

Step 8. When the weight of the cylinder being recharged stops increasing, the CO_2 has stopped flowing under its own pressure. At this point, start the transfer unit and watch the scale carefully. The transfer pump should be started only when all valves are verified correctly aligned; otherwise, overpressurization in the transfer system may rupture the neoprene seal.

CAUTION

Do not close the valve of the cylinder being recharged or the shutoff valve in the pump outlet hose while the transfer unit is pumping.

Step 9. When the full capacity of the cylinder being recharged has been reached, perform the following operations in rapid succession.

a. Stop the transfer unit motor.

b. Tightly close the shutoff valve in the pump outlet hose.

c. Close the valve of the cylinder being recharged.

Step 10. Disconnect the hose from the cylinder being recharged. Do this very slowly to allow the escape

of the CO_2 that is trapped between the shutoff valve and the cylinder being recharged.

Step 11. Weigh the recharged cylinder carefully. Note the charged weight on the cylinder record card.

Step 12. After recharging is complete, close the supply cylinder valve tightly. Open the shutoff valve in the pump outlet hose very slowly and allow all the CO_2 in the unit to be discharged to the atmosphere.

REVIEW QUESTIONS

Q1. What type of fire-fighting agent is known to foul electrical and electronic components, as well as the internal parts of turbines and engines?

1. Water
2. Halon
3. AFFF
4 PKP

Q2. What type of fire-fighting agent may be used to vapor seal a small fuel spill?

1. Water
2. Halon
3. AFFF
4. PKP

Q3. Before using a portable CO_2 fire extinguisher, you should ground the cylinder to the deck.

1. True
2. False

PROTECTIVE EQUIPMENT

Learning Objective: Recall the purpose and operation of protective equipment used in fire fighting.

The Navy uses a wide variety of special fire-fighter's protective equipment. It includes the oxygen breathing apparatus (OBA), the self-contained breathing apparatus (SCBA), the fire-fighter's ensemble, and antiflash clothing. Other equipment includes gloves, fire-fighter's helmet, antiflash hood, and voice amplifiers. You will need to know what equipment is available, how to operate it, and how to maintain it in top condition.

OXYGEN BREATHING APPARATUS

The type A-4 oxygen breathing apparatus (OBA) is used throughout the Navy. The OBA is an entirely self-contained breathing apparatus. It enables the wearer to breathe independently of the outside atmosphere. It produces its own oxygen from chemical reaction and allows the wearer to enter compartments, voids, or tanks that contain smoke, dust, or fire, or those that have a low oxygen content.

Major OBA Components

You will be required to wear and operate the type A-4 OBA and to maintain it in perfect condition. To do so, you must know the various components of the OBA and their functions. Figure 5-5 shows the components and identifies them. As you read about the various components, refer to this figure as well as to the additional figures pertaining to the individual components.

1.	Facepiece	7.	Bail assembly handle
2.	Breathing tubes	8.	Canister release strap
3.	Breathing tube couplings	9.	Relief valve and pull tab
4.	Body harness and pad	10.	Timer
5.	Breathing bag	11.	Plunger assembly
6.	Breastplate assembly	12.	Valve assembly

Figure 5-5. Components of the OBA.

FACEPIECE.—The OBA facepiece (fig. 5-6) contains the eyepiece, the speaking diaphragm, and the head straps. The eyepiece is a one-piece clear lens. A spectacle kit is provided that may be installed in the facepiece. Corrective lenses may be installed in the kit

for individuals who require glasses. However, once the lenses are installed, only the person that the lenses are made for can use that spectacle kit. The speaking diaphragm allows you to talk to others and to use communication devices, such as sound-powered telephones. The head straps hold the facepiece snug against your face. If the straps are adjusted properly, no outside gases can get inside of the facepiece.

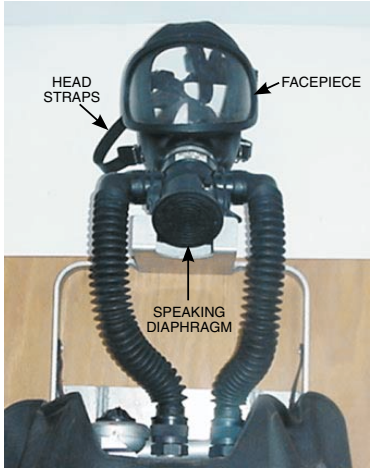

DCf0506

Figure 5-6. Facepiece with spectacle kit installed.

BREATHING BAG AND TUBES.—The OBA has a breathing bag and two breathing tubes to control the oxygen. The breathing bag contains the oxygen that is generated by the canister for you to breathe. One breathing tube transports the oxygen from the breathing bag to the facepiece (fig. 5-7); the other transports the exhaled air back to the canister. Both tubes are made of corrugated rubber. They control the flow of air and help cool the air for your comfort when you wear the OBA. The tubes are a quick-disconnect type. The tube couplings are color coded, and the supply tube is of a different size than the exhaust tube. This prevents the possibility of connecting the tubes to the wrong couplings.

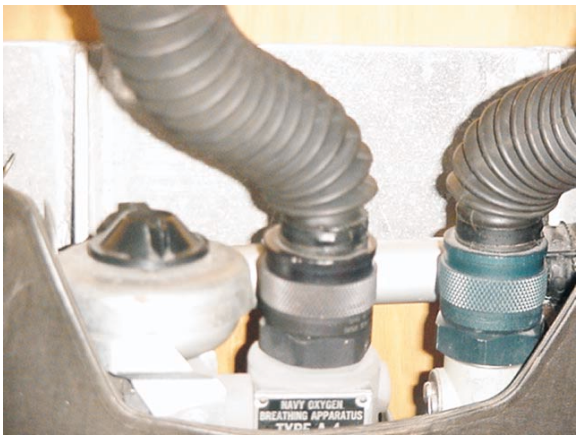

DCf0507

Figure 5-7. Breathing tubes.

TIMER.—The timer (fig. 5-8) is located at the top of the breastplate assembly so that you can check the amount of time remaining as you go about your duties. The bell of the timer is made to ring for 8-10 seconds continuously.

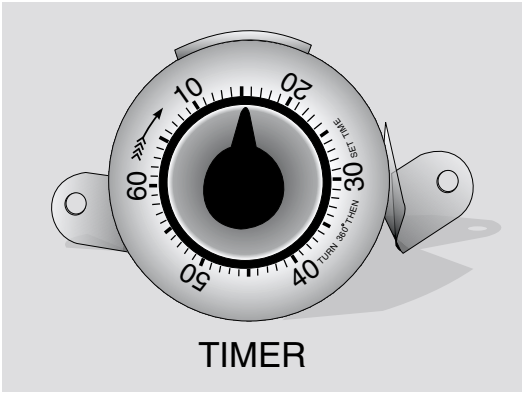

DCf0508

Figure 5-8. Timer.

BREASTPLATE ASSEMBLY.—The breastplate assembly (fig. 5-5) houses the plunger assembly, the canister guard and holder, and the handle. The plunger pierces the copper foil seal of the canister when the canister is seated in place. The handle actuates the seating mechanism that positions the canister in its housing. The outside of the breastplate assembly is insulated to protect you from the heat produced by the oxygen canister.

COMBINATION VALVE ASSEMBLY.—The combination valve assembly is shown in figure 5-9. It directs the flow of air through the canister to the breathing bag.

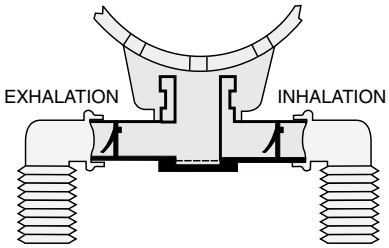

DCf0509

Figure 5-9. Combination valve assembly.

OBA QUICK-STARTING CANISTER.—The quick-starting canister (fig. 5-10, views A and B) is painted green. This is the only canister that you will use aboard ship. The rubber gasket provides an airtight seal when the canister is in the operating position in the OBA. The copper foil seal protects the chemicals from moisture until the canister is ready for use. The chlorate candle, which is built into the canister, produces oxygen for about 5 minutes until normal oxygen generation begins. You will be able to breathe

in the oxygen and exhale it just as if you were not wearing an OBA. The moisture and carbon dioxide from your exhaled breath activate the chemicals in the canister. The chemicals in the canister cleanse your exhaled breath of the moisture and carbon dioxide and return the cleansed air to you as you inhale.

Figure 5-10. View A, front view of quick-starting canister for use with Type A-4 oxygen breathing apparatus.

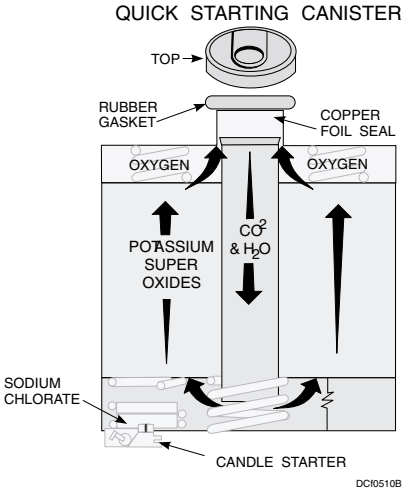

Figure 5-10. View B, cross-sectional view of quick-starting canister.

The amount of your exertion will determine how long the canister produces oxygen. The more active you are, the faster the chemicals will be expended. The canister will last longer when you are doing mild work, such as investigating shipboard damage. When you are involved in hard work, such as fighting a fire, the canister will last for about 30 minutes. Your normal breathing habits will also effect the length of time the canister will last. When you replace an expended canister with a new canister, do so only in fresh air.

Airflow System

At this point, you should know and understand the use of each component of the OBA. Figure 5-11 shows an OBA with a canister installed. The arrows indicate the airflow through the OBA.

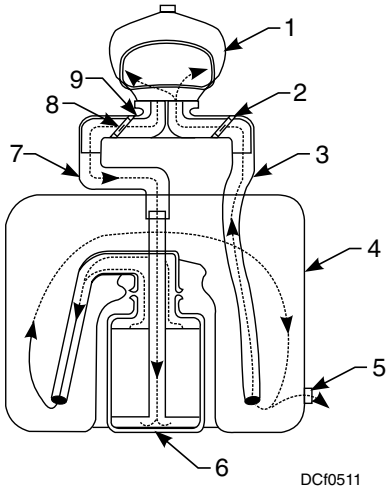

1. Facepiece
2. Inhalation valve
3. Inhalation tube
4. Breathing bag
5. Pressure relief valve
6. Canister
7. Exhalation tube
8. Exhalation valve
9. Combination valve assembly

Figure 5-11. Airflow diagram.

As you exhale, moist breath passes through the exhalation tube (7), through the valve housing to the bottom of the canister (6), and upward through the chemical. The carbon dioxide is absorbed, and the moisture present reacts with the chemical to give off oxygen. This oxygen passes into a breathing bag (4) (part of the breastplate group) from which the inhalation tube (3) allows the breathable mixture to be drawn into the facepiece (1) by your normal intake of breath.

Check valves (2 and 8) are used in the inhalation and exhalation passages. An automatically operated pressure-relief valve (5) in the breathing bag relieves excess pressure in the breathing bag. The speaking diaphragm, as described earlier, is built into the facepiece.

OBA Operating Procedures

Damage Controlmen use the OBA on a regular basis for fire-fighting and training purposes. It will protect you; however, improper use of the OBA could make you a personnel casualty. The following topics

discuss the type A-4 OBA operating procedures. It is very important that you learn to use them properly. You should practice the operating procedures under the supervision of a leading petty officer who is qualified in the use of the OBA.

DONNING THE OBA.—The steps of the procedure for donning the OBA are as follows:

Step 1. With one hand, grasp the facepiece at the combination valve housing and the apparatus at the operating handle. With the other hand, grasp the straps of the body harness and the body pad D ring. Bring the pad and harness over your head while positioning the OBA on your chest. See figure 5-12.

Figure 5-12. Step 1, donning the OBA.

Step 2. Find the two straps hanging free in back (fig. 5-13, view A). Attach the end of each strap to the ring on each side of the breastplate (fig. 5-13, view B).

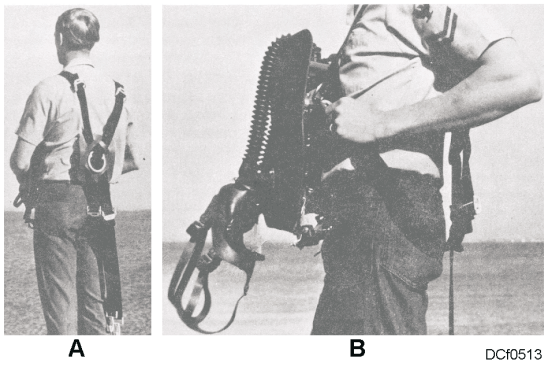

Figure 5-13. Step 2, donning the OBA.

Step 3. Position the breastplate on your chest so that the breathing tube connections are slightly below your shoulders. Your head movement should not be restricted when you don the facepiece. While holding the apparatus in this position, adjust the two underarm straps and then adjust the two shoulder straps (fig. 5-14) until the apparatus fits comfortably. The harness pad should be located in the center of your back, down from the neck for a comfortable fit.

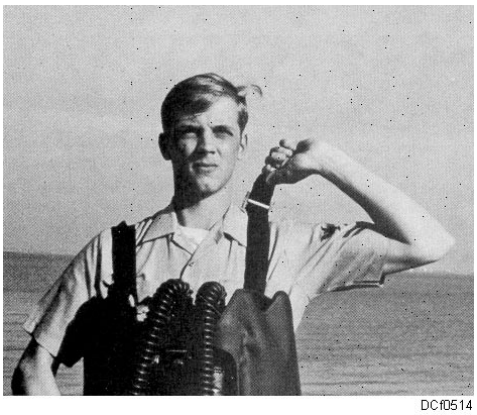

Figure 5-14. Step 3, donning the OBA.

Step 4. Place the facepiece over your head in the standby position (fig. 5-15) until you are ready to activate the canister.

Figure 5-15. Step 4, donning the OBA.

Step 5. Install the canister in the following manner:

a. Remove the tear-off cap of the canister by pulling the tab backward and downward to expose the copper-foil seal (fig. 5-16). Discard the cap.

Figure 5-16. Step 5, removing the tear-off cap.

b. Remove the canister candle cover by rotating the swivel plate 180º. Push it down toward the center of the canister, as shown in view A of figure 5-17.

Leave the cover dangling by the lanyard, as shown in view B of figure 5-17. When you remove the candle cover, do NOT pull the lanyard so that the cotter pin is removed. The removal of the cotter pin fires the candle, and the canister starts generating oxygen. If this happens while the copper-foil seal is intact, internal pressure in the canister will build up. This pressure will cause the copper foil seal or the canister seam to rupture.

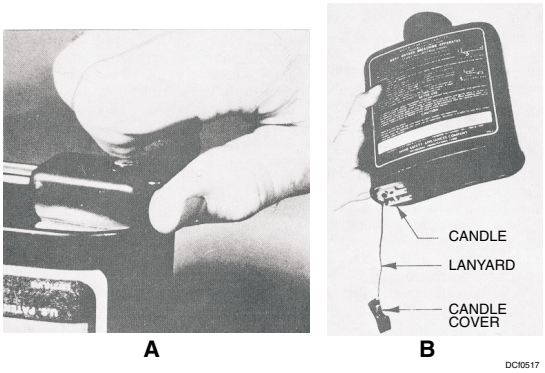

Figure 5-17. Removing the candle cover, views (A) and (B).

c. Hold the canister with the neck up and the concave, or ribbed side, toward your body. Insert the canister upward into the guard and breastplate assembly (fig. 5-18) until the canister is firmly in place. The canister is now locked in a standby position with the copper-foil seal still intact. If the copper-foil seal is pierced when the canister is placed in the standby position, the standby stop will need to be adjusted. An OBA that pierces the copper-foil seal in the standby position is NOT to be used until the adjustments are made.

Figure 5-18. Inserting the canister.

Step 6. Don and adjust the facepiece as follows:

a. Place the head harness straps over the front of the facepiece.

b. Insert your chin into the chin stop of the facepiece (fig. 5-19, view A).

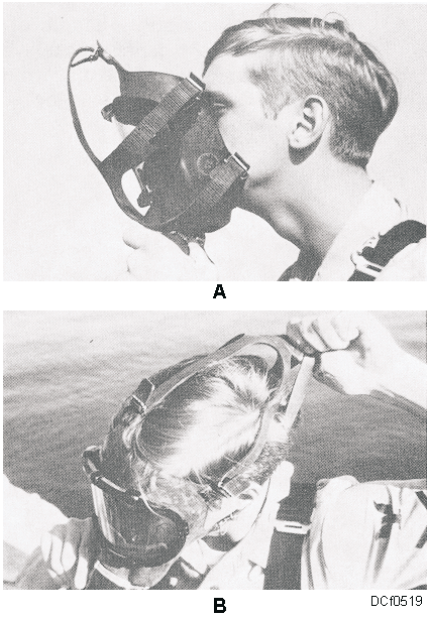

Figure 5-19. Step 6, donning the facepiece, views (A) and (B).

c. Pull the head straps from the front of the facepiece over your head (fig. 5-19, view B). Be sure your hair is not under the facepiece shield.

d. Make sure the straps lie flat against your head.

e. Tighten the lower straps (neck straps) first.

f. Tighten the side straps.

g. Place both hands on the head harness pad (on the back of your head) and push it down toward your neck.

h. Repeat steps e and f.

i. Tighten the forehead or front strap, if needed.

Step 7. Test the facepiece for a good seal by squeezing the corrugated breathing tubes tightly to prevent the passage of air (fig. 5-20). Inhale gently so the facepiece collapses slightly, and hold your breath for .05 seconds. The facepiece will remain collapsed while your breath is held if the assembly is gas tight. If you detect any leakage around the face seal, readjust your head harness straps. If you detect other than face-seal leakage, investigate the condition and correct it. You MUST test the facepiece for a seal before each use.

Step 8. Make final adjustments on all four body harness straps. You should be able to look up or down without having the facepiece shift or catch on the timer or the main valve housing.

Figure 5-20. Step 7, checking the airtightness of the facepiece.

Step 9. If you are going into a standby or ready condition, loosen only the lower facepiece straps and then remove the facepiece. Place the facepiece over your head and out of the way until ready to start the canister and put the OBA into operation. In an emergency, eliminate this step.

STARTING THE CANISTER.—When ordered to enter the contaminated area, you start the canister in the following manner:

Step 1. If your facepiece is in the standby position, put it on before starting the canister. Retighten the lower straps and retest your facepiece for a proper seal.

Step 2. Unlock the bail assembly handle of the OBA by using both hands to depress the tabs from the bottom lock. Swing the handle upward until it snaps. Test the handle to see if it is locked by lightly pushing the handle forward without depressing the tabs.

Step 3. Pull the lanyard on the canister straight out and away from your body. This removes the cotter pin (fig. 5-21), fires the candle, and inflates the breathing bag with oxygen. After you pull the lanyard, always check to ensure that the cotter pin is still attached to the lanyard. A slight amount of harmless smoke may be present in the facepiece while the candle is burning.

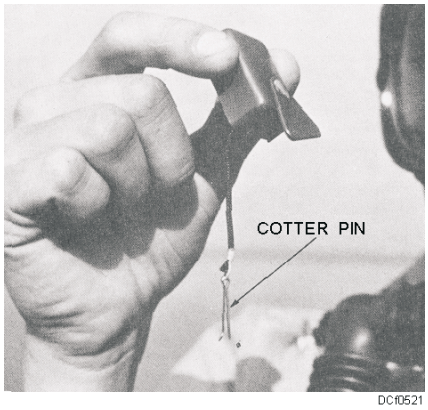

Figure 5-21. Checking for the cotter pin.

Step 4. Now, test the tube connectors, canister, and breathing bags for tightness. While the candle is filling the breathing bag, depress the breathing bag at the pull tab with your left hand. Grasp and seal off both breathing tubes with your right hand, while pressing against the right side of the breathing bag with your right elbow (fig. 5-22). The bag must be compressed at the pull tab so that the relief valve does not vent during this test. The bag must remain inflated; otherwise, there may be a leak in the OBA, which you must correct before use.

Figure 5-22. Testing the OBA.

Step 5. Breathe normally. The chemical reaction of the canister will generate more oxygen than you require. If too much oxygen is produced, the extra oxygen will be vented automatically by the relief valve in the bag when the bag reaches full capacity. A manual relief pull tab on the valve (fig. 5-23) is provided in case the valve sticks in the closed position during a long period of storage. Do NOT pull the breathing bag tab during normal use. If you do, you will vent your breathing oxygen from the breathing bag to the atmosphere.

Figure 5-23. Manual relief valve tab.

In the event of a malfunction of the candle, you can activate the canister manually. The manual starting of the canister is not recommended. The procedures listed here are to be used only when the chlorate candle has misfired and sufficient time is available to start the

canister manually or if there is a shortage of available canisters. Under no circumstances should you save the chlorate candle to use for an emergency exit of the space. Such practice is dangerous, and the candles have been known to misfire.

When manually starting the canister, you should be in a clean atmosphere and must adhere to the following procedure:

Step 1. Work one finger under the edge of your facepiece, stretching the mask slightly to break the seal.

Step 2. Inhale while grasping and squeezing both breathing tubes with your other hand. This will allow you to draw external air from outside the facepiece.

Step 3. Release the breathing tubes, remove your finger to reseal the mask, and exhale into the facepiece.

Step 4. Continue this cycle until your breathing bag is fully inflated. Exhaust the air in the breathing bag by exerting pressure on the right-hand side until the bag on the right is deflated. In this process, your moist breath passes through the canister to start the chemical reaction. One filling of the bag is not usually sufficient to activate the canister fully.

Step 5. Repeat steps 1 through 4 to reinflate and deflate the breathing bag at least five times. Now, without gloves, cautiously feel the bottom of the canister. If the entire bottom of the canister is warm, oxygen is being generated. The apparatus is then ready for setting the timer and for the operational check. If the canister is not warm, repeat steps 1 through 4. In cooler temperatures, several cycles of inflation and deflation of the bag may be required to start oxygen production.

SETTING THE TIMER.—To set the timer, grasp the knob on the timer. Turn the knob clockwise to 60 minutes, and then turn it counterclockwise to 30 minutes. By setting the timer to 60 first, you fully wind the alarm bell spring. When 30 minutes have expired, the warning bell will sound continuously for 10 or more seconds. When you have set the timer, you are ready to enter a hazardous atmosphere.

REMOVING AN UNUSED CANISTER.—If the copper-foil seal of the canister has not been punctured, remove the canister by placing one hand on the bottom of the canister and pulling the canister releasing strap. You do not need to wear gloves in this situation. The handle must also be in the load and standby positions. Once the canister is removed, protect the copper-foil seal by installing an aluminum cap. These caps are designed for this purpose and are maintained in repair lockers.

REMOVING A USED CANISTER.—When you remove a hot canister, you need to protect your hands with approved protective gloves. Once the canister has been used, remove the facepiece and put it over your head in the standby position. Then release the bail from the operation position and swing it down to the load and standby positions. Next spread your feet apart and lean the upper part of your body slightly forward. To release the used canister, pull the canister release strap (fig. 5-24). The canister will drop out of the apparatus (fig. 5-25). Drop the canister ONLY on a clean, dry deck.

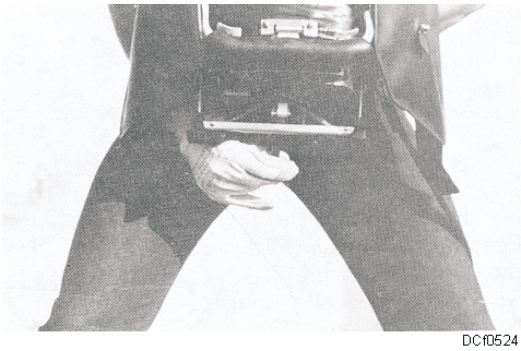

Figure 5-24. Releasing the canister.

WARNING

You must be careful when removing used canisters from the OBA. The canisters are hot, and the chemicals inside of the canister are similar to caustic soda and can cause serious chemical burns if they get on your skin. Also, the chemicals will cause a violent explosion if they come into contact with a petroleum-based substance.

Figure 5-25. Dropping the canister.

DISPOSAL OF USED CANISTERS.—You must dispose of an OBA quick-starting canister as soon as possible after it has been used or when the copper-foil seal has been punctured. If your ship is more than 25 nautical miles from shore, the OOD may

grant permission to dispose of the canister overboard. Once permission has been granted, ensure that the canister cap is removed and the copper-foil seal is fully punctured. This will allow water to enter the canister. DO NOT puncture holes in the bottom or sides of the canister. Make sure there is no oil in the water. Then throw the canister overboard. If oil gets inside of the canister, a violent explosion will occur. If you are within 25 nautical miles of shore, do not throw the canister overboard. Instead, let it cool down for at least 30 minutes. (If a canister was not used but the copper-foil seal has been punctured, place the canister in a clean bucket. Light off the canister and let it set for 15 minutes to cool.) When the canister is cool enough to handle, place a new metal cap on the neck to cover the punctured copper-foil seal. Then double wrap the canister in a poly bag. The wrapped canister should then be stored in a dry, oil-free area until it can be disposed of at sea or turned over to a shore facility for disposal. When the ship is in port, contact the department ashore that is responsible for hazardous waste. Make arrangements with that department to turn all canisters over to them for disposal.

REMOVING THE OBA.—The steps of the procedure for removing the OBA are as follows:

Step 1. Remove the facepiece by releasing the head straps at the buckles with your fingertips before pulling the headpiece off. If the canister is still in the OBA, place the facepiece over your head in the standby position and remove the canister. NEVER remove the OBA with a canister in place.

Step 2. If the facepiece is in standby position, you should remove it and let it hang in front of the OBA.

Step 3. Loosen the waist strap; then unhook it.

Step 4. Loosen the shoulder straps and unhook the harness at the upper corners of the breastplate assembly. Grasp the facepiece and operating handle with one hand and the shoulder harness (preferably at the D-ring connector) with your other hand. Lift the OBA over your head.

Step 5. If the OBA is wet or moist, wipe it down.

Step 6. Always clean the outside body of the OBA after each use with a mild solution of soap and warm water.

Step 7. Disinfect the inside of the facepiece. Mix the disinfectant according to the manufacturer's instructions, as stated on the container label. Use a sponge that is moist, but not dripping, with the disinfectant solution.

OBA Equipment Stowage

Before the OBA is stowed, the facepiece should be protected to prevent scratches and abrasions. All OBA equipment and canisters must be stored in a cool, dry place. The life of an OBA will be lengthened if it is stored under these conditions. The term *cool* denotes temperatures ranging from above freezing to 110°F (43°C) when storage is out of direct sunlight. The term *dry* usually denotes a storage area where condensation does not come in contact with the equipment.

The OBA is normally stowed in repair lockers or in OBA lockers. These lockers have provisions for stowing the OBA in a flat position. You should ensure that the facepiece is properly protected to prevent scratching or scarring of the lens. The flash hood may be used to protect the lens of the facepiece. The canisters should be stowed with the concave side down. Additional information on cleaning, inspecting, and testing of the type A-4 OBA can be found in the *Naval Ships' Technical Manual* (*NSTM*), chapter 079, volume 2, and the appropriate PMS.

SELF-CONTAINED BREATHING APPARATUS

The self-contained breathing apparatus (SCBA) is now being phased aboard ship as a replacement for the OBA. The SCBA is designed to be used for fire fighting and is entirely self-contained, allowing the wearer to breathe independently of the outside atmosphere. It provides clean breathable air from a tank carried on the back that allows the wearer to enter spaces in much the same manner as an OBA.

The SCBA operates using a demand-pressure system. When the wearer inhales normally, the regulator opens, allowing air to flow into the mask. When the wearer exhales, a simple one-way valve (known as an exhalation valve) vents the exhaled air without allowing contaminants from the outside atmosphere to enter the mask. This operation is also known as an open-circuit system.

There are several different models of SCBA in use, both aboard ship and at shore facilities. All SCBAs have four basic component assemblies and operate in a similar manner. The assemblies are as follows:

1. Harness/backpack assembly

2. Air tank assembly

3. Regulator assembly (including low-pressure alarm and high-pressure hose)

4. Facepiece assembly

The SCBA is an important piece of protective equipment and personnel must be given proper training on its safe operation. This training will be conducted according to the manufacturer's technical manuals, and maintenance will be accomplished according to the associated PMS and with the manufacturer's technical manual. The training will include but not be limited to the following: cleaning, inspection, and replacement of components.

SUPPLIED AIR RESPIRATOR WITH SELF-CONTAINED BREATHING APPARATUS

The supplied air respirator (SAR) with self-contained breathing apparatus (SCBA) is commonly referred to as the SAR/SCBA. It is designed primarily to support gas-free testing and inspections. The SAR/SCBA can be used to inspect tanks and voids, including those suspected of having flammable, explosive, or toxic atmospheres. The SAR/SCBA cannot be used for a fire-fighting breathing apparatus. Additionally, it cannot be used as a diving apparatus for investigating flooded or submerged spaces.

The SAR/SCBA provides breathing air for compartment or void inspections from portable cylinder systems through air hoses and a facepiece (fig. 5-26). The primary air supply pack (PASP) is a lightweight assembly containing one high-pressure air cylinder and a control panel assembly. Figure 5-27 (views A and B) shows the top control panel and the front control panel. The air cylinder contains 87 standard cubic feet (scf) of air at 4,500 pounds per square feet gauge (psig). A reserve air supply pack (RASP) (fig. 5-28) provides two additional cylinders and is connected to the control panel assembly on the PASP. The control panel assembly allows the operator to select and shift air cylinders as necessary to ensure constant airflow to personnel inside a space or void. One air cylinder can support one SCBA user for up to 55 minutes.

Two gauges and an audible alarm monitor air pressures. An air regulator reduces the air pressure to 60-80 psig for delivery to the air distribution system. The manifold has four quick disconnects to allow up to four SCBA users to simultaneously connect to the PASP. A bleed valve allows a means to depressurize the

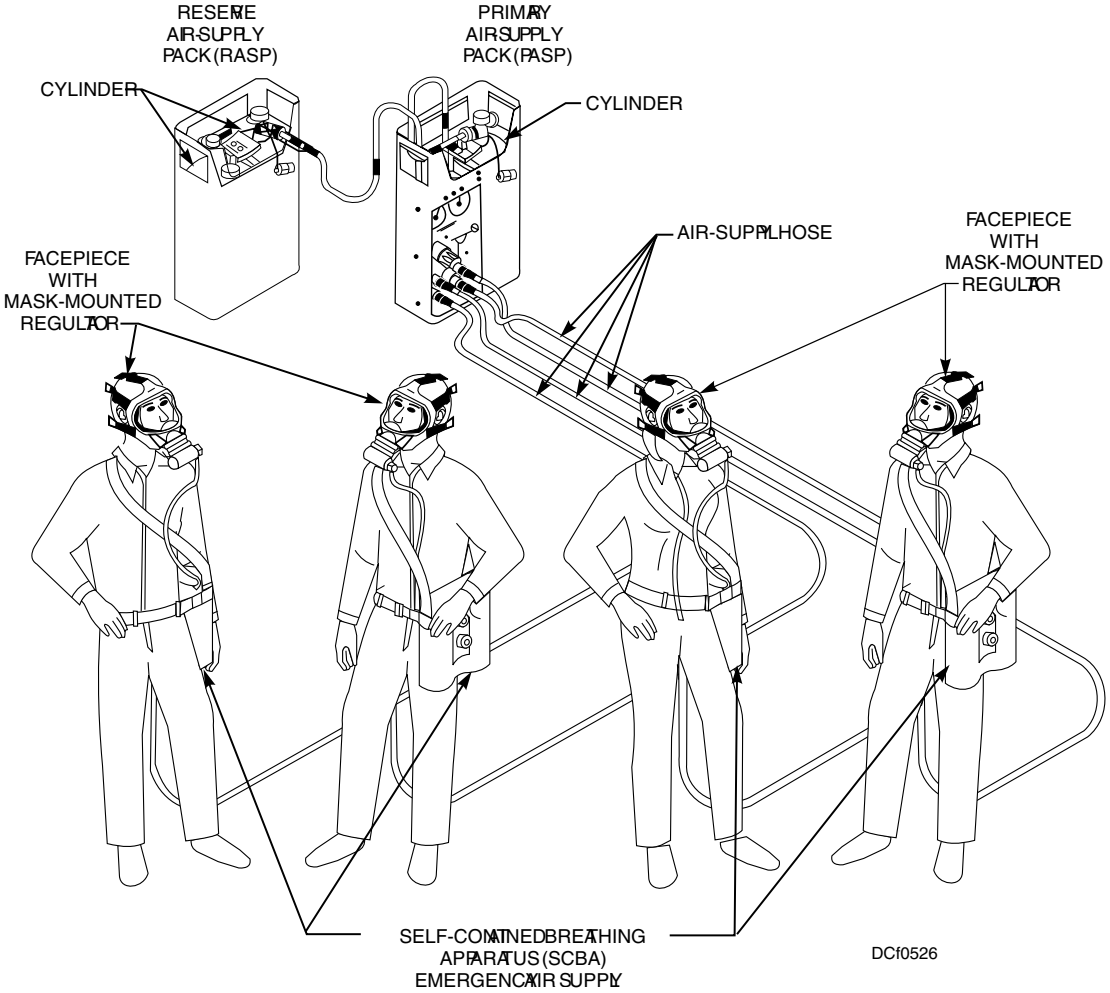

Figure 5-26. SAR/SCBA component interrelationship diagram.

system. No more than four lengths of air supply hoses may be used in making up a maximum working length of hose. Each hose is 75 feet in length.

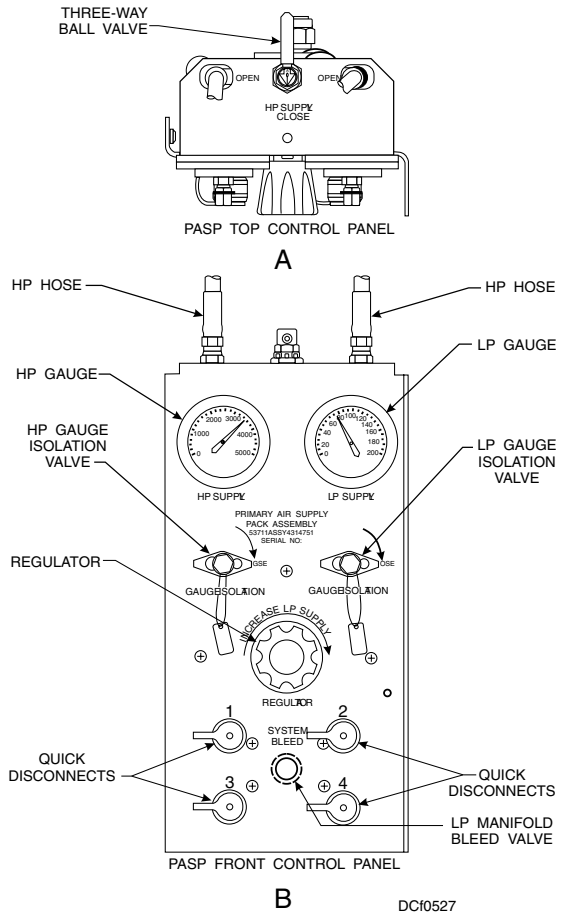

Figure 5-27. PASP controls and indicators, (view A) top and (view B) front panels.

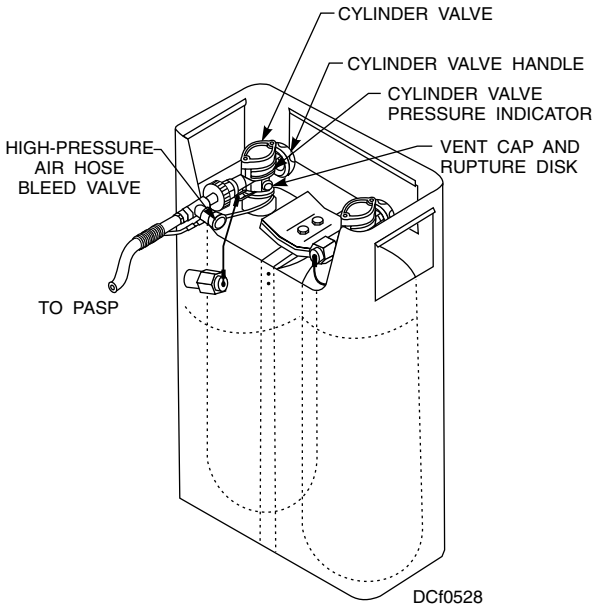

Figure 5-28. RASP controls and indicators.

The self-contained breathing apparatus (SCBA) provides a source of backup air if the PASP/RASP airflow is interrupted or fails. It consists of two lightweight escape cylinders, a full facepiece with a mask-mounted pressure demand regulator, a first stage regulator, an alarm, and other associated components. A harness and carry pouch is provided to carry and protect the cylinders. The SCBA provides an emergency air supply of 15 minutes. Proper techniques to don and remove the SCBA will vary slightly due to different styles of SCBA, and you will learn and practice these techniques either aboard ship or at a Fleet Training Center, during fire-fighting team trainer evolutions.

WARNING

Properly performed scheduled maintenance is essential to safe, dependable operation of the supplied air respirator (SAR) with the self-contained breathing apparatus (SCBA). Omission or lax performance of prescribed maintenance procedures could result in equipment failure, injury, or death to personnel.

Cleaning, inspections, and scheduled maintenance of the SAR/SCBA is vital for personnel safety and must be completed according to scheduled PMS and the manufacturer's technical manual.

FIRE-FIGHTER'S ENSEMBLE

The fire-fighter's ensemble is designed to protect the fire fighter from short duration flame exposure, heat, and falling debris. Your safety during actual casualties and training evolutions may depend on proper wearing of the ensemble. Your hose team will practice donning and removing the ensemble (as well as the OBA or SCBA), and you will be expected to become proficient at donning your equipment in a rapid, safe, and correct manner.

The components of the fire-fighter's ensemble include the following:

- Fire-fighter's coveralls
- Fire-fighter's antiflash hood
- Damage control/fire-fighter's helmet
- Fire-fighter's gloves
- Fire-fighter's boots

WARNING

The fire-fighter's ensemble is not a proximity suit, nor is it designed to wear to make a crash fire rescue. Prolonged contact with flames may cause the clothing to transmit dangerous heat to the body, or may cause the clothing itself to burn, which could result in serious injury or death to the fire fighter. The ensemble does not offer complete protection against chemical, biological, or radiological effects.

Fire-fighter's Coveralls

The fire-fighter's coveralls is a one-piece jump suit style. The coveralls consists of an outer shell, a vapor barrier, and an inner fire-retardant liner. The knees, bottoms of the thigh pockets, and bottoms of the legs are reinforced with leather for extra protection. Reflective marking strips around the upper arms, the lower legs, and the torso highlight the outline of the fire fighter so that he or she can be seen in dense smoke or dim light.

Fire-fighter's Antiflash Hood

The fire fighter's antiflash hood provides protection to the head, neck, and face (except the eyes). The hood can be worn with the breathing apparatus, over the straps of the facepiece. It has an elastic face closure and is available in a single size which fits all.

Damage Control/Fire-fighter's Helmet

The fire-fighter's helmet is designed to protect the head, neck, and face from short duration flame exposure, heat, and falling objects. The helmet shell material is heat-resistant fiber glass. The helmet is a long, rear brim, face shield with a chin strap, adjustable suspension, reflective markings, and ear flaps that cover the side of the head and neck. High-intensity battery-powered helmet lights are provided in the repair locker and may be attached to the helmet.

Fire-fighter's Gloves

Fire-fighter's gloves are provided to protect against abrasion, short duration flame exposure, and heat. They are made of leather, aluminized fabric with a waterproof vapor barrier and a fire-retardant liner.

Fire-fighter's Boots

The fire-fighter's rubber boots have steel safety toes and puncture-proof steel insoles. They are provided in two models, knee high and hip length, and in a variety of sizes. The knee-high version are the most commonly used boots. The hip boots provide protection from deeper levels of hot or boiling water.

ANTIFLASH CLOTHING

Antiflash clothing is intended to protect personnel from transient high temperatures that may occur from the use of high explosive weapons and from being burned in a fire. Antiflash clothing consists of an antiflash hood and antiflash gloves. The hood is the same one used with the fire-fighter's ensemble. The antiflash gloves are made from fire-retardant cotton and one size fits all.

REVIEW QUESTIONS

Q4. What piece of fire-fighter's equipment produces its own oxygen and allows entry into otherwise uninhabitable areas?

1. MCU-2P protective mask
2. Protective overgarment
3. MOPP oxygen generator
4. Oxygen breathing apparatus (OBA)

Q5. The chlorate candle of an OBA quick-starting canister can produce oxygen for approximately what maximum length of time, in minutes?

1. 9
2. 8
3. 6
4. 5

Q6. Why must you turn an OBA timer to 60 minutes before turning it back to 30 minutes?

1. To release the lock on the clock
2. To clear the timer of any impurities
3. To wind the timer fully
4. To activate the timer alarm

Q7. What person can grant permission to dispose of used OBA canisters when your ship is at sea?

1. OOD
2. DCA
3. XO
4. LCPO

Q8. The self-contained breathing apparatus (SCBA) is a piece of fire-fighter's equipment that provides air from a tank carried on your back that allows you to enter spaces in much the same manner as an OBA.

1. True
2. False

Q9. The primary purpose of the SAR/SCBA is to support gas-free testing and inspections.

1. True
2. False

Q10. The emergency air supply of the SAR/SCBA is stored in two lightweight cylinders in a harness and carry pouch.

1. True
2. False

DEWATERING EQUIPMENT

Learning Objective: To recall general information about various types of emergency dewatering equipment located aboard ship.

PORTABLE EMERGENCY PUMPS

The P-100 portable pump is a diesel engine-driven centrifugal pump assembly, used aboard ship for fire fighting and dewatering (fig. 5-29). When used for fire fighting, the P-100 pump draws water from the sea and pumps the water through hoses to supply the firemain or individual fire hoses. When used for dewatering, the P-100 takes suction on a flooded compartment and discharges it into the sea. The P-100 is designed to provide 100 gpm at 83 psi with a suction lift of 20 feet. Other configurations may be rigged to create a greater suction lift; these are discussed in *NSTM*, chapter 555, volume 1 (series).

The P-100 pump is a single-suction, one-stage centrifugal pump. The suction and discharge connections have male threads, which are 3 inches and 2 1/2 inches, respectively. The suction hose is a 3-inch-hard rubber hose and may be fitted with a foot valve assembly. The foot valve consists of a flapper valve (to keep the engine primed) and a strainer to keep large foreign matter out of the pump.

Two examples of fire-fighting hookups are shown in figures 5-30 and 5-31. A dewatering configuration is shown in figure 5-32. (Shown on the following pages.)

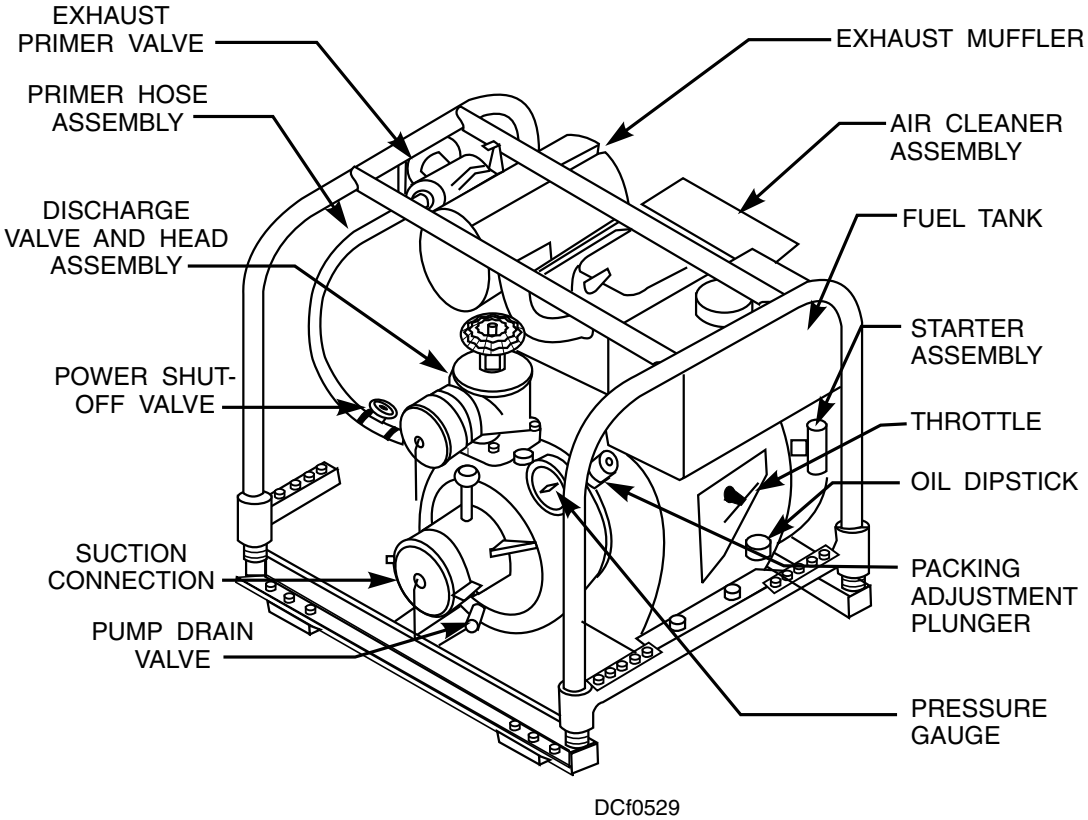

Figure 5-29. P-100 portable diesel engine-driven centrifugal pump.

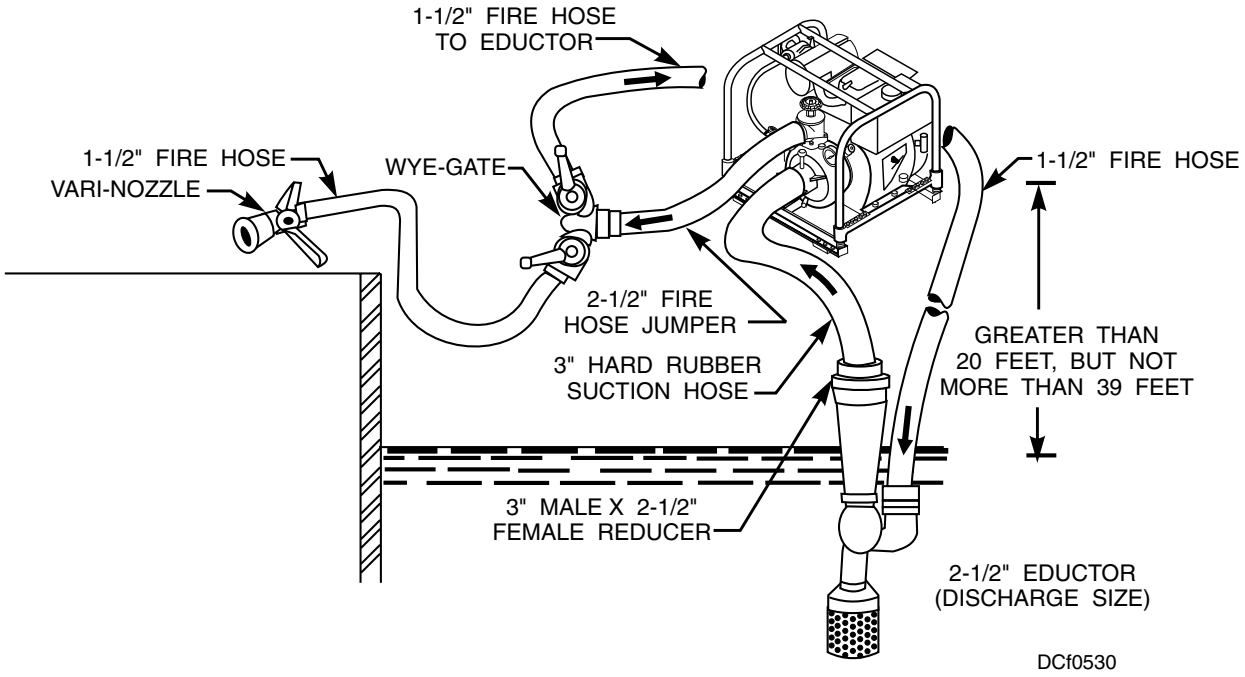

Figure 5-30. Fire-fighting hookup.

An air-cooled single-cylinder, four-cycle diesel engine rated at 10 horsepower powers the P-100 pump. A mechanical governor is used to control the speed of the engine. It contains a 1.45 gallon fuel tank that will allow up to 2.75 hours of operation. The engine exhaust muffler is constructed to receive an exhaust hose. (See warning.)

WARNING

The diesel engine exhaust contains poisonous carbon monoxide. Never use the pump unit in poorly ventilated locations, such as enclosed spaces. If such operation is unavoidable, provide proper ventilation and use an approved exhaust hose routed to the weather decks.

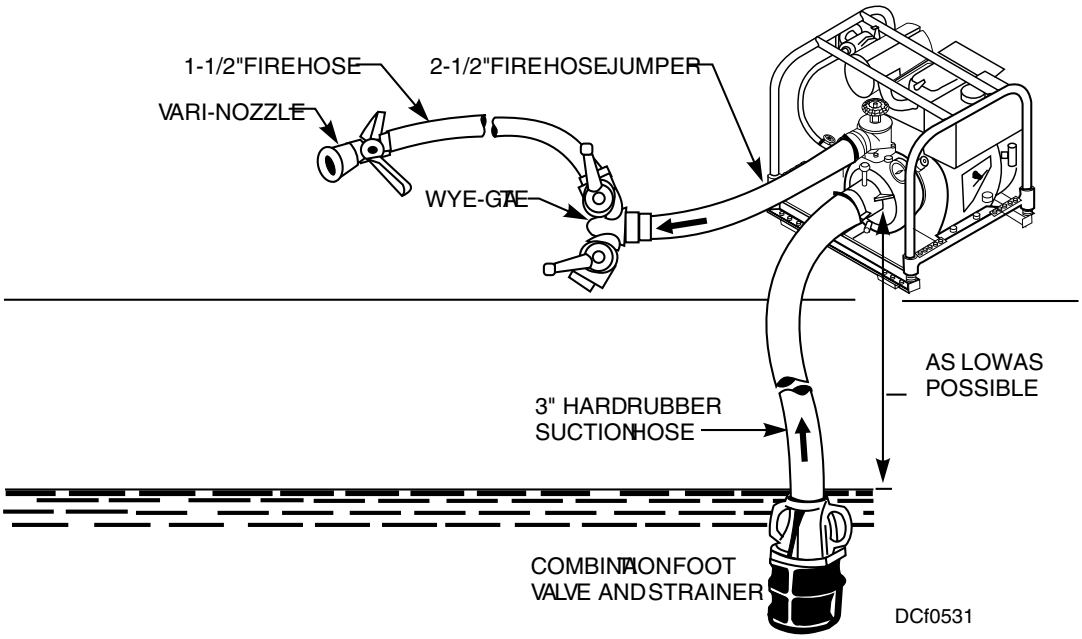

Figure 5-31. Fire-fighting hookp for suction lifts greater than 20 feet.

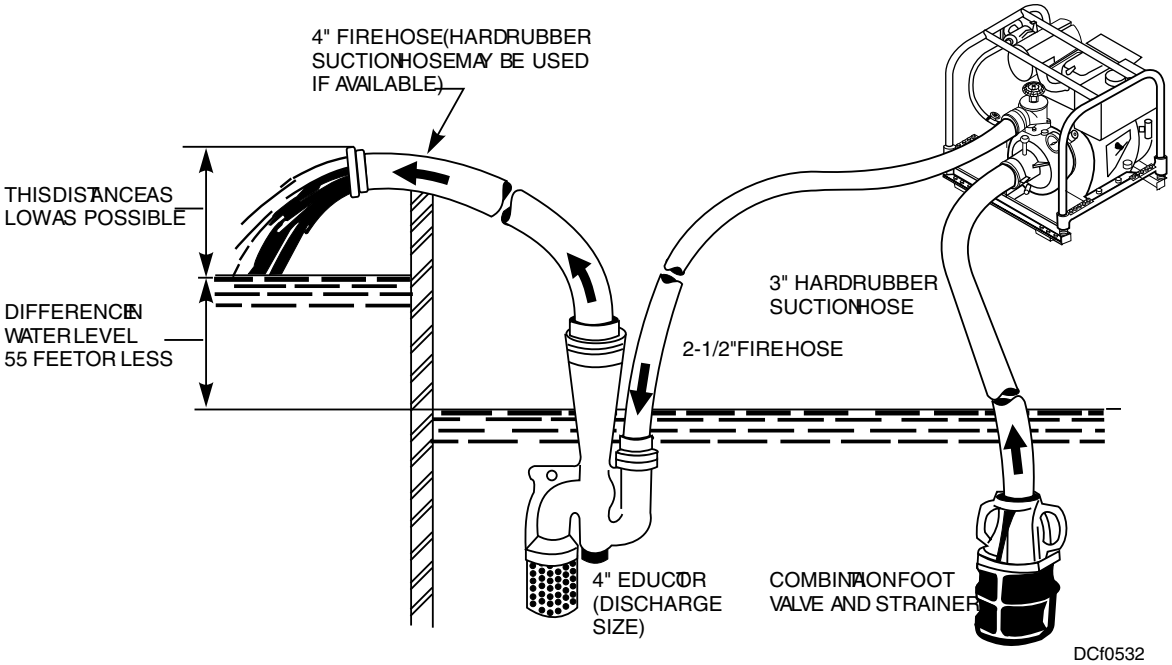

Figure 5-32. A typical P-100 dewatering configuration.

The P-100 pump should be stowed on the damage control deck or above. No more than one single pump will be stored within a single main watertight division. One pump, complete with all accessories, will be stowed for ready transfer off the ship for rescue and assistance use. The P-100 pump has a total dry weight of 106.9 pounds; therefore, one person should not attempt to move it alone.

Various types of maintenance will be required to maintain the P-100 pump in operating condition, such as cleaning, inspection, lubrication, and testing. Maintenance will be accomplished according to PMS. Repairs may also be necessary and should only be accomplished by trained personnel, using approved procedures from the manufacturer's technical manual.

PORTABLE SUBMERSIBLE PUMPS

The portable submersible pump (fig. 5-33) used aboard naval ships is a centrifugal pump driven by a water-jacketed constant speed ac electric motor and may be designed to operate as single or three phase at 120, 240, or 440 volts. This design is rated to deliver 140 gallons per minute against a maximum head of 70 feet and 180 gallons per minute at a 50 foot static head. This output is variable and will increase with a decrease in head pressure. Strainers are always used with submersible pumps when floodwater is being pumped. Some pumps of this type are mounted semipermanently with the discharge connected to a drainage system.

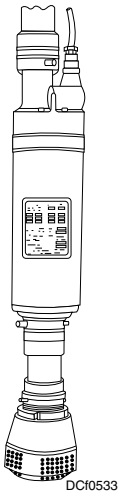

Figure 5-33. Ac portable electric submersible pump.

To dewater a compartment with a submersible pump, lower the pump into the water using the attached nylon handling line and lead the 2 1/2-inch discharge hose to the nearest point of discharge. This may be an emergency overboard discharge connection, found on the damage control deck. The amount of water taken from a flooded space increases as the discharge head decreases. Therefore, dewatering is accomplished

most efficiently if the water is discharged at the lowest practicable point and if the discharge hose is short and free from bends and kinks. When it is necessary to dewater against a high discharge head, you can use two submersible pumps in tandem (series), as shown in figure 5-34. The pump at the lower level lifts water to the suction side of the pump at the higher level. A multiple outlet connection box is used to make the necessary electrical connections and will allow concentration of multiple pumps in a single location.

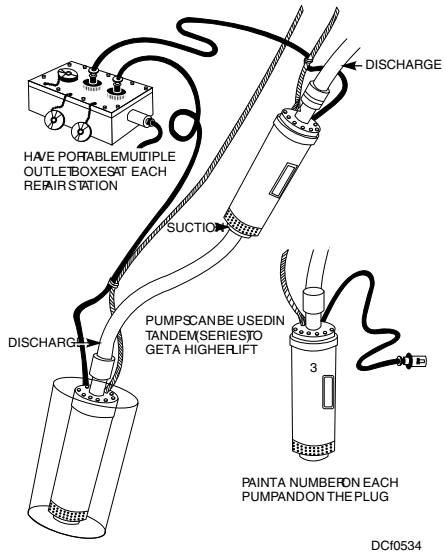

Figure 5-34. Tandem connections for submersible pumps.

When using a submersible pump, always lower it and raise it by the nylon handling line and NOT by the electric cable. Handling the pump by the electric cable could break the watertight seal where the cable enters the housing. The handling line is secured to the pump housing through an eye installed for that purpose. It may be married to the power cable (tied together), provided considerable slack is left in the cable at the pump end.

Submersible pumps are not designed to pump gasoline or heavy oil. Since the pumped liquid circulates around the motor as a coolant, gasoline can leak into the motor and cause an explosion. If you use a submersible pump to pump heavy oil, the motor will burn out because the viscous liquid will impose a heavy load on the motor. Also, a heavy, viscous liquid will not dissipate heat rapidly enough to keep the motor cool.

An electrical submersible pump must be carefully checked out by an electrician before use; do not wait until a casualty develops to discover a malfunctioning pump. All repairs, testing, and maintenance must be accomplished according to PMS and the manufacturer's technical manual.

PORTABLE AND FIXED EDUCTORS

Eductors (fig. 5-35) are jet-type pumps that contain no moving parts. An eductor contains jets (sometimes called nozzles), as shown in figure 5-36, through which water flows under pressure. The firemain (or the P-100 fire-fighting pump) supplies the actuation water that enters the eductor through the supply connection. The velocity (speed) of the water increases while flowing through these nozzles and creates a vacuum in the suction area of the eductor. The suction side of the eductor is connected to a noncollapsible hose or may be submerged into a flooded space to remove the water.

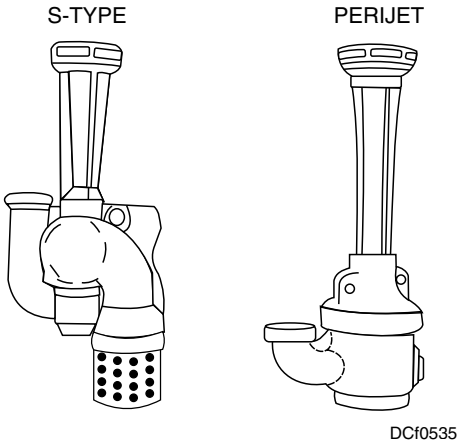

Figure 5-35. Portable eductors.

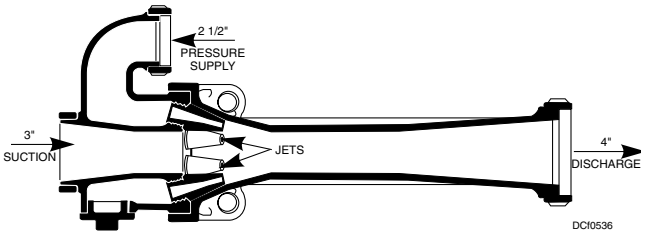

Figure 5-36. Cross-sectional view of a perijet eductor.

Eductors are used to pump liquids that cannot be pumped by other portable pumps (such as heavy oils and flammable liquids) and are able to remove liquids that contain small particles of foreign matter. The rate of dewatering will depend on actuation pressure (from

the firemain) and the discharge head (how far above the eductor the water has to rise to be removed). When observing the eductor operation, you must be aware that not all of the eductor discharge is supplied from the compartment being dewatered. A large percentage of this discharge is the actuation water supplied by the firemain

NOTE

Oils and flammable liquids are not normally permitted to be discharged overboard and should be disposed of according to environmental regulations.

There are other factors, which may affect eductor operation. The condition of the suction piping must be inspected periodically for deterioration, and all joints and flanges should be tight. Air entering the suction piping will prevent the eductor from operating properly. Drainage valve misalignment in other spaces will affect eductor operation as well. You may unknowingly be removing water from the bilges in an adjacent space instead of the intended compartment. Proper supply pressure from the firemain must be substantially higher than the pressure against which the eductor is required to operate. If the pressure is not high enough to be discharged overboard, it will simply back up through the eductor into the space, actually increasing the rate of flooding in the compartment. Improper valve lineups may actually cause flooding in other compartments. When using the eductor, posted operating procedures, or Engineering Operational Sequence System (EOSS) (if installed), is mandatory.

Installed eductors function to create a vacuum in suction piping, removing water from bilges, either in the compartment where they are located or remotely. Unattended operation, especially in remote spaces, may asphyxiate personnel working in the compartment. Train personnel working in confined or closed spaces to recognize the potential for hazards of asphyxiation.

WARNING

Eductors located in remote spaces, if activated, can remove all breathing air, particularly if ventilation is secured, inadequate, or not installed. Ensure sufficient make-up air is provided and the space has adequate oxygen before entry in all eductor-equipped remote spaces. Maintain communication with personnel working inside the remote space while eductor operation is in progress.

Concern for the environment is extremely important, and various pollution laws have been enacted. Federal law prohibits the discharge of oil into inland or coastal waters, and there are restrictions pertaining to shipboard discharges on the high seas. The engineering officer of the watch (EOOW) must give permission for eductor operation.

Fixed eductors are installed in the ship's main drainage system and are normally used to dewater bilges. Fixed eductors are normally of the perijet design with no suction strainers installed. A cross-sectional view of a perijet eductor is shown in figure 5-36.

Portable eductors can be rigged as required to dewater a compartment or space. They are often used with the P-100 pump to dewater compartments. Figure 5-37 shows one arrangement that could be used. In this arrangement both the P-100 pump and the eductor are removing water from the flooded compartment.

PORTABLE AFFF IN-LINE EDUCTORS

The portable in-line eductor is used to mix seawater and AFFF concentrate to produce an AFFF solution for combating fires especially class BRAVO fires. The eductor consists of a bronze body with an internal ball check valve and flexible pickup tube assembly. The eductor is used in conjunction with a 95 gpm vari-nozzle. Seawater passing through the eductor creates a suction in the pickup tube assembly which, in turn, draws AFFF concentrate from a 5-gallon can or 55-gallon drum (fig. 5-38). The eductor mixes the AFFF concentrate and seawater at approximately 6 percent ratio when the inlet pressure to the eductor is 100 psig. Continuous use will require about 5 gallons of AFFF concentrate per minute.

In-line eductors should be connected directly to fire plugs to minimize inlet pressure reduction due to friction loss. Friction loss downstream of the eductor can create sufficient backpressure so the AFFF suction will cease to operate, but seawater will continue to flow. Users of the in-line eductor must limit the hose length downstream of the eductor to three lengths (150 feet) when fighting fires in the horizontal plane or advancing up not more than one deck. When the AFFF eductor is rigged on a deck above the deck where the fire is being fought (as in machinery space re-entry), up to six lengths of hose (300 feet) may be connected downstream of the eductor.

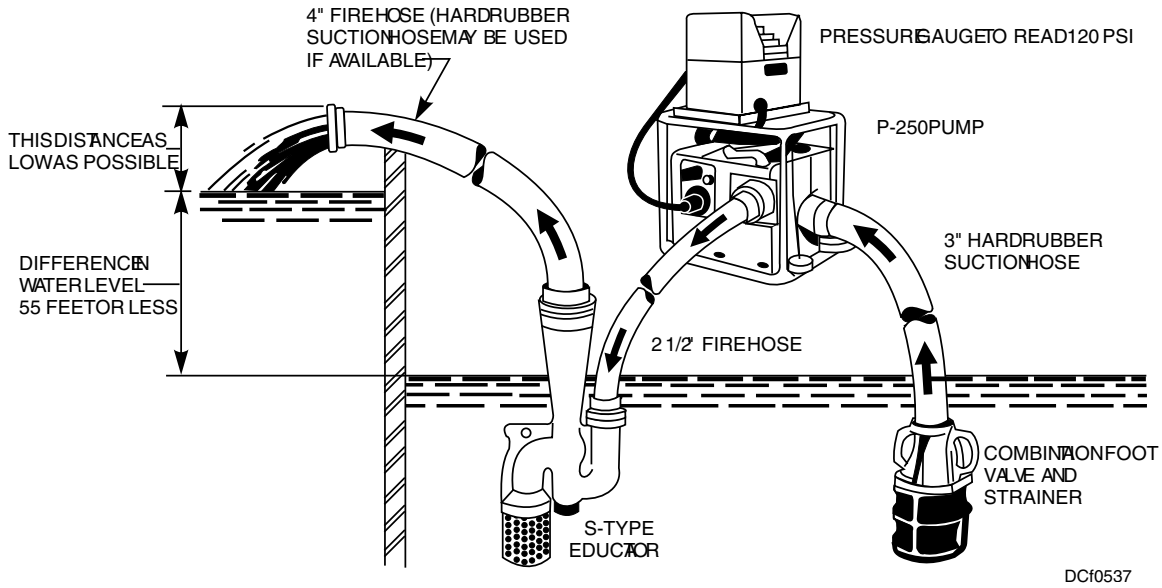

Figure 5-37. P-250 pump and eductor rigged for dewatering a flooded compartment.

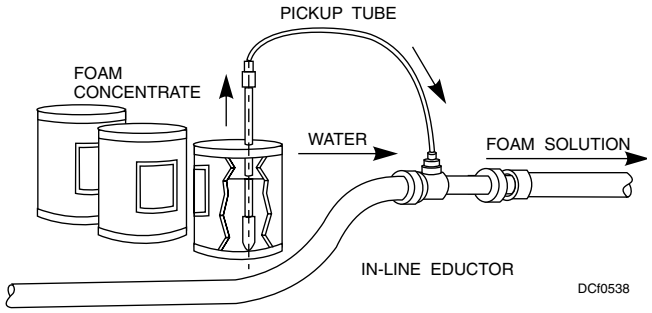

Figure 5-38. AFFF in-line eductor setup.

EMERGENCY OVERBOARD DISCHARGE CONNECTIONS

The emergency overboard discharge connections, port and starboard, are installed through the hull of each main transverse subdivision on the damage control deck. It is a 4-inch connection, reduced to 2 1/2 inches, and is normally used during dewatering evolutions. Some smaller ships may use a standard 2 1/2-inch connection that does not require a reducer. These connections are not normally fitted with valves; instead, they are fitted with watertight screw caps over the inboard ends. Eductor or portable fire-fighting pumps may be directed overboard through these connections.

Maintenance for the emergency overboard discharge connections will include cleaning, inspecting, and lubrication. Maintenance will be accomplished according to the applicable planned maintenance.

REVIEW QUESTIONS

Q11. What dangerous gas is produced when the P-100 pump is operated?

1. Chlorine
2. Hydrogen sulfide
3. Carbon monoxide
4. Carbon dioxide

Q12. The portable submersible pump is rated to deliver 180 gallons per minute, against a maximum head of 50 feet.

1. True
2. False

Q13. An eductor is a jet-type pump that contains no moving parts.

1. True
2. False

Q14. What equipment is designed to mix seawater and AFFF concentrate to produce an AFFF solution for combating fires?

1. Firemain
2. Submersible pumps
3. Portable AFFF in-line eductor
4. P-100 pump with AFFF mixer attached

MISCELLANEOUS PORTABLE EQUIPMENT

Learning Objective: To recall characteristics of desmoking fans and blowers and other miscellaneous pieces of damage control gear.

There are other miscellaneous pieces of portable damage control equipment that you need to be familiar with. These include various fans and blowers and battle lanterns.

PORTABLE FANS AND BLOWERS

Different types of fans and blowers are available for desmoking, and each has different advantages. Some are electric motor-driven and are not to be used in explosive environments. Other blowers are powered by the firemain; these require that the firemain be available and that hoses be rigged to supply them. These fans require cleaning, inspection, and maintenance to ensure their reliability, and this may be your responsibility. Additionally, you may be involved in repairs and/or component replacement and will use PMS and the manufacturer's technical manuals to ensure quality maintenance.

Fans or blowers are often used to recirculate or remove large volumes of air. Electric "box" fans are convenient and easy to rig but pose risks when operating in (or removing) explosive atmospheres. Additionally, these fans require that power be available for operation. Water-driven blowers do not pose this threat (as long as they are properly grounded), but other considerations do apply. The firemain is the motive force for this blower and must be rigged to supply it, as well as a discharge hose.

Portable Ramfan™

The portable Ramfan™ is one of the primary fans used aboard ships today for desmoking or introducing ventilation into a compartment. The firemain or a P-100 pump supplies the power for the Ramfan™ through a 1 1/2-inch hose connection. A water turbine operates the fan blades, which may rotate in excess of 10,000 rpm (depending on firemain pressure). The Ramfan™ is compact (18 inches in diameter) and weighs under 35 pounds, allowing easy transport.

WARNING

Exhausting gases through duct can create a static electric charge. It is important to ensure positive contact to ground to avoid unwanted discharge while operating around explosive atmospheres.

Portable Electric Desmoking Fans

The medium capacity fan is a portable electric fan designed to be used by damage control personnel for rapidly desmoking compartments in areas where exhaust ducting is not needed. It produces a tight spiral of air or smoke to prevent recirculation into the area being desmoked.

The portable desmoking fan should be inspected for damage before use. Careful inspection of the electrical cord is necessary to prevent shock hazards, and the tamper seal on the electric motor must be intact. If this seal is broken, the fan must not be used in any explosive environments. Ensure that the screen guards are in place before operation.

The portable electric desmoking fan operates using 115 volts ac; simply plug it in and turn it on. Damage control plates and your Main Space Fire Doctrine will assist you in determining the most efficient desmoking methods. Additional guidance may be found in *NSTM*, chapter 555, volume 1.

Cleaning, inspection, and testing of these fans must be accomplished according to PMS and the manufacturer's technical manual.

BATTLE LANTERNS

Battle lanterns are provided throughout the ship for emergency lighting whenever normal lighting is unavailable. The two types of battle lanterns are relay and portable lanterns and they are mounted in strategic locations to illuminate passageways, damage control equipment, ladders, and scuttles. Battle lanterns are damage control equipment, and the damage control petty officer uses PMS to repair and maintain them.

Relay Lanterns

Relay lanterns are installed throughout the ship to provide limited illumination when other sources fail. Battle lanterns use standard-issue 6-volt batteries and are periodically checked to ensure their reliability. The electrical relays in these lanterns turn the lantern on whenever the normal lighting circuits are de-energized. These have the following uses and applications:

- Prevent panic and personnel injury, which might occur in total darkness.
- Mark escape routes (both normal and emergency).
- Permit charging of fixed foam injection units.
- Permit emergency destruction of classified material.
- Permit restoration of electric power.
- Permit operation of locks on facilities installed for stowage of classified material.
- Permit performance of ship control functions, damage control, personnel decontamination, and continued medical treatment where no delay can be tolerated.

Portable Lanterns

Portable lanterns are used to supplement relay lanterns and at other stations where duties involve the functional operation of the ship. Portable lanterns shall be used according to the following requirements:

- Stations and small spaces that are only used occasionally (except such spaces as staterooms and lockers) shall have one lantern.
- In ship magazines, lanterns shall be installed so that there is one to illuminate each access closure and one to illuminate each passing scuttle. One additional lantern per 200 square feet shall be installed, preferably on stanchions, to illuminate aisle spaces.
- In cargo magazines, four lanterns shall be installed at each access.
- Lanterns shall be installed to provide detail illumination of items such as tabletops, charts, and information displays, where such illumination is required to perform ship control functions, and where a slight delay can be tolerated.

FLASHLIGHTS/HEADLAMPS

The Navy provides a variety of general-purpose flashlights for daily use. These flashlights are relatively sturdy, and little maintenance is required. You should inspect the flashlight casing, lens, and switch for damage. Operationally, test the flashlight by turning it on and observing the brightness. If necessary, replace the batteries.

Several models of explosion-proof flashlights are now available for repair locker use and for use in gas-free inspections. These flashlights are sealed so that no electrical current can come in contact with a potentially explosive environment.

Headlamps are installed on fire fighter's helmets to enable the fire fighter to see wherever he turns his head without having to hold a flashlight in his hand. There are several models available; all are battery powered and must be tested periodically to ensure that they will work when needed. Headlamps that fail must be replaced or repaired.

REVIEW QUESTIONS

Q15. The firemain or a P-100 pump supplies the power for the Ramfan™ through a 1 1/2-inch hose connection.

1. True
2. False

Q16. Battle lanterns use standard-issue 6-volt batteries.

1. True
2. False

Q17. What person is responsible for performing maintenance on battle lanterns?

1. Officer of the deck
2. Damage control petty officer
3. Damage control assistant
4. Damage control officer

SUMMARY

In this chapter you were introduced to a variety of portable equipment used in fire fighting and in emergency dewatering. Some specialized damage control equipment is covered in other chapters of this book; other newer equipment may not be covered at all. The intent of this chapter is to give you a basic overview of certain portable equipment. To become proficient, you must train with this equipment under proper supervision and familiarize yourself with the technical manuals.

REVIEW ANSWERS

A1. What type of fire-fighting agent is known to foul electrical and electronic components as well as the internal parts of turbines and engines? **(4) PKP**

A2. What type of fire-fighting agent may be used to vapor seal a small fuel spill? **(3) AFFF**

A3. Before using a portable CO_2 fire extinguisher, you should ground the cylinder to the deck. **(1) True**

A4. What piece of fire-fighter's equipment produces its own oxygen and allows entry into otherwise uninhabitable areas? **(4) Oxygen breathing apparatus (OBA)**

A5. The chlorate candle of an OBA quick-starting canister can produce oxygen for approximately what maximum length of time, in minutes? **(4) About 5 minutes**

A6. Why must you turn an OBA timer to 60 minutes before turning it back to 30 minutes? **(3) To wind the timer fully**

A7. What person can grant permission to dispose of used OBA canisters at sea? **(1) OOD**

A8. The self-contained breathing apparatus (SCBA) is a piece of fire-fighter's equipment that provides air from a tank carried on your back that allows you to enter spaces in much the same manner as an OBA. **(1) True**

A9. The primary purpose of the SAR/SCBA is to support gas-free testing and inspections. **(1) True**

A10. The emergency air supply of the SAR/SCBA is stored in two lightweight cylinders in a harness and carry pouch. **(1) True**

A11. What dangerous gas is produced when the P-100 pump is operated? **(3) Carbon monoxide**

A12. The portable submersible pump is rated to deliver 180 gallons per minute, against a maximum head of 50 feet. **(1) True**

A13. An eductor is a jet-type pump that contains no moving parts. **(1) True**

A14. What equipment is designed to mix seawater and AFFF concentrate to produce an AFFF solution for combating fires? **(3) The portable AFFF in-line eductor**

A15. The firemain or a P-100 pump supplies the power for the Ramfan™ through a 1 1/2-inch hose connection. **(1) True**

A16. Battle lanterns use standard-issue 6-volt batteries. **(1) True**

A17. What person is responsible for performing maintenance on battle lanterns? **(2) Damage control petty officer**

CHAPTER 6

FIRE-FIGHTING SYSTEMS

Learning Objectives: Recall the location, design, and operation of shipboard fire-fighting systems to include firemain, aqueous film-forming foam (AFFF), magazine sprinkler, installed carbon dioxide (CO_2), and Halon systems.

To fight fires onboard ship effectively, damage control personnel must not only be very familiar with the primary damage control equipment but must also be knowledgeable of fire-fighting systems onboard Navy ships. This chapter provides general information about fire-fighting systems. Detailed information is contained in the manufacturer's technical manual for each system.

FIREMAIN SYSTEMS

Learning Objective: Recall the function of a shipboard firemain and the components of the three basic types of firemain systems onboard Navy ships along with the design and use of magazine sprinkler systems.

The firemain system receives water pumped from the sea. It distributes this water to fireplugs, sprinkling systems, flushing systems, machinery cooling-water systems, washdown systems, and other systems as required. The firemain system is used primarily to supply the fireplug and the sprinkling systems; the other uses of the system are secondary.

TYPES OF FIREMAIN SYSTEMS

Navy ships have three basic types of firemain systems. They are as follows:

1. The single-main system
2. The horizontal loop system
3. The vertical offset loop system

The type of firemain system in any particular ship depends upon the characteristics and functions of the ship. Small ships generally have a straight-line, single-main system. Large ships usually have one of the loop systems or a composite system, which is some combination or variation of the three basic types.

The design of the three basic types of firemain systems is as follows:

1. The single-main firemain system shown in figure 6-1 consists of a single piping run that extends fore and aft. This type of firemain is generally installed near the centerline of the ship, extending forward and aft as far as necessary.

2. The horizontal loop firemain system shown in figure 6-2 consists of two single fore-and-aft, cross-connected piping runs. The two individual lengths of piping are installed in the same horizontal plane (on the same deck) but are separated athwartships as far as practical.

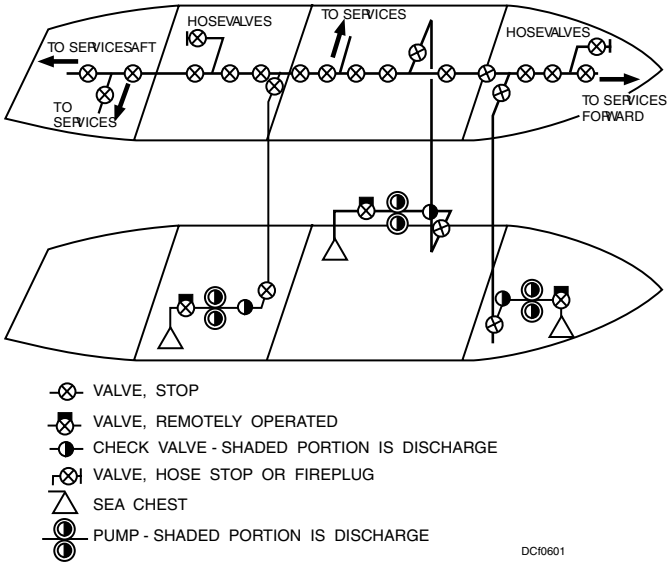

Figure 6-1. Single-main firemain system.

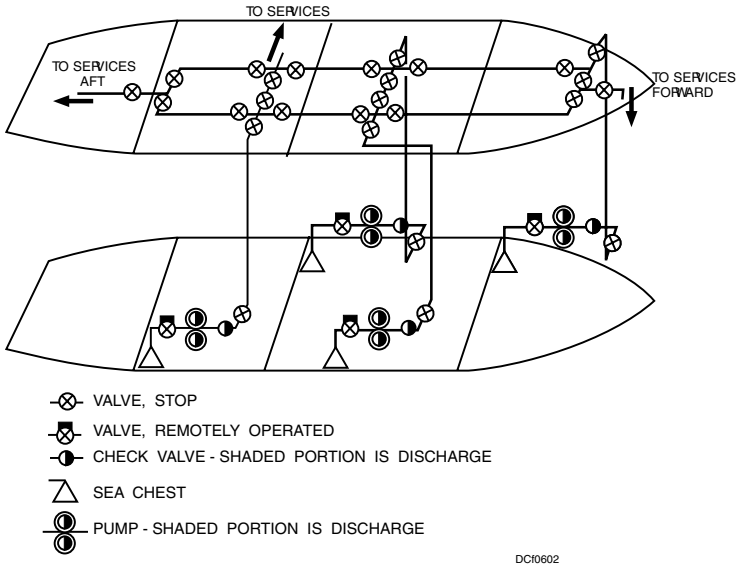

Figure 6-2. Horizontal loop firemain system.

3. The vertical offset loop firemain system shown in figure 6-3 consists of two single piping runs, installed fore-and-aft in an oblique (that is, angled) plane, separated both vertically and athwartship, connected at the ends to form a loop. The lower section of the firemain is located as low in the ship as practical on one side, and the upper section is located on the damage control deck on the opposite side of the ship. Athwartship cross-connects are usually provided at each pump riser.

A commonly used variation is a composite firemain system that consists of two piping runs installed on the damage control deck and separated athwartships. A bypass section of piping is installed at the lower level near the centerline. Cross-connections are installed alternately between one service piping run and the bypass piping.

MAGAZINE SPRINKLER SYSTEMS

Sprinkler systems are used for emergency cooling of, and fire fighting in, magazines, ready-service rooms, ammunition, and missile handling areas. A magazine sprinkler system consists of a network of pipes. These pipes are secured to the overhead and connected by a sprinkler system control valve to the ship's firemain system. The pipes are fitted with spray

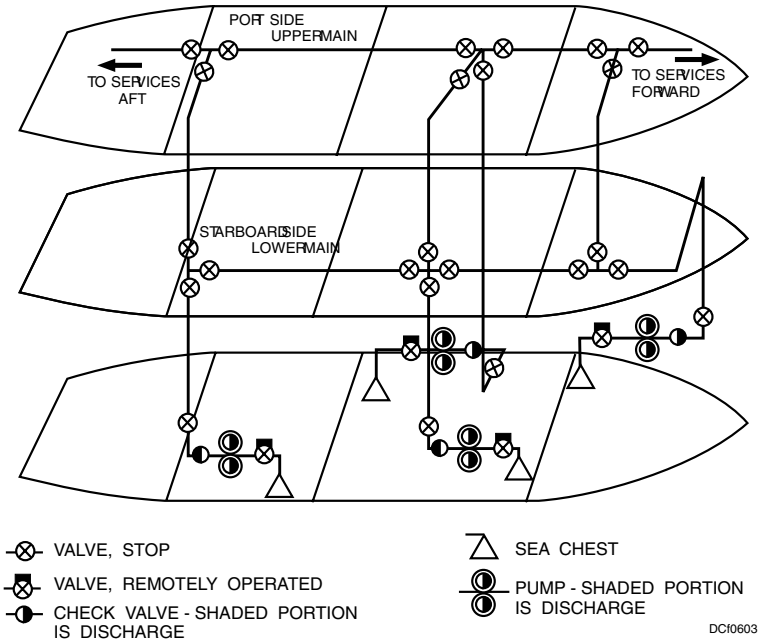

Figure 6-3. Vertical offset loop firemain system.

heads or sprinkler-head valves. They are arranged so the water forced through them showers all parts of the magazine or ammunition and missile-handling areas. A modern sprinkler system can wet down all exposed bulkheads at the rate of 2 gallons per minute per square foot. It can sprinkle the deck area at the rate of 4 gallons per minute per square foot.

Magazine sprinkler systems can completely flood their designated spaces within an hour. To prevent unnecessary flooding of adjacent areas, all compartments equipped with sprinkler systems are watertight. Upper deck handling and ready-service rooms are equipped with drains that limit the water level to a few inches.

The valves that control the operation of the magazine sprinkler system are as follows:

1. The manual control valve. This valve permits hydraulic operation of the sprinkler valve.

2. The hydraulically operated remote control valve. This diaphragm operated globe type valve is opened by operating pressure acting against the underside of the disk and closed by operating pressure acting on top of the diaphragm. This valve permits the sprinkler valve to be secured from other stations, whether or not it was manually or automatically actuated.

3. The spring-loaded lift check valve. This spring-loaded, diaphragm operated, lift check valve closes tightly against the reverse flow and opens wide to permit flow in the normal direction. Spring-loaded lift check valves permit the control system to be operated from more than one control station by preventing backflow through the other stations.

4. The hydraulically operated check valve. This valve permits the operating pressure to be vented from the diaphragm chamber of the magazine-sprinkling valve, thereby permitting that valve to close rapidly and completely.

5. Power operated check valve. This piston operated poppet type valve is opened by pressure from the "close" loop of the actuating pressure acting against the piston.

The Gunner's Mates assigned to a ship's company maintain the magazine sprinkler systems. However, personnel in the Damage Controlman rating must consider what effect their maintenance or repair on the firemain system will have on the magazine sprinkler systems.

REVIEW QUESTIONS

Q1. The firemain system is used primarily to supply seawater to what other systems?

1. Bilge and heating
2. Air-conditioning and main power
3. Boiler and auxiliary power
4. Fireplug and sprinkling

Q2. There is a total of how many basic types of firemain systems designed for use on large Navy ships?

1. 1
2. 2
3. 3
4. 4

Q3. What type of firemain system is separated both vertically and athwartship?

1. Single-main
2. Horizontal
3. Auxiliary
4. Vertical offset loop

Q4. Sprinkler systems are used for emergency cooling of, and fire fighting in, magazines, ready-service rooms, ammunition, and missile handling areas.

1. True
2. False

Q5. What are the two basic types of hydraulically controlled sprinkler systems used on naval ships?

1. The reciprocal and jet types
2. The pump-operated vacuum and the full bore types
3. The firemain-operated dry type and the firemain-operated wet type
4. The main power and auxiliary power types

Q6. What Navy rating maintains the magazine sprinkler systems?

1. Gunner's Mate
2. Engineman
3. Damage Controlman
4. Machinist's Mate

INSTALLED AQUEOUS FILM-FORMING FOAM (AFFF) SYSTEM

Learning Objective: Recall the operation and function of the components of an installed AFFF system.

Aqueous film-forming foam (AFFF) is one of the most widely used fire-fighting agents. AFFF is primarily used aboard ship to fight class BRAVO fires, often in conjunction with Purple-K-Powder (PKP). AFFF is delivered through both portable and installed equipment. Two types of installed AFFF systems are shown in figures 6-4 and 6-5.

Damage control personnel must have a basic understanding of the operation of AFFF systems and the function of each of the components of the system. Different ships use different AFFF setups. However, once you understand the basic operation of system components, you should be ready to use the AFFF systems aboard any Navy ship.

COMPONENTS

The primary components and associated equipment of a shipboard AFFF system include the following:

- AFFF Generating Equipment
- AFFF Single-Speed Injection Pump
- AFFF Two-Speed Injection Pump
- AFFF Transfer Pumps
- AFFF Tanks
- AFFF Valves
- Balanced Pressure Proportioner (Type II)
- Balanced Pressure Proportioner (Type III)

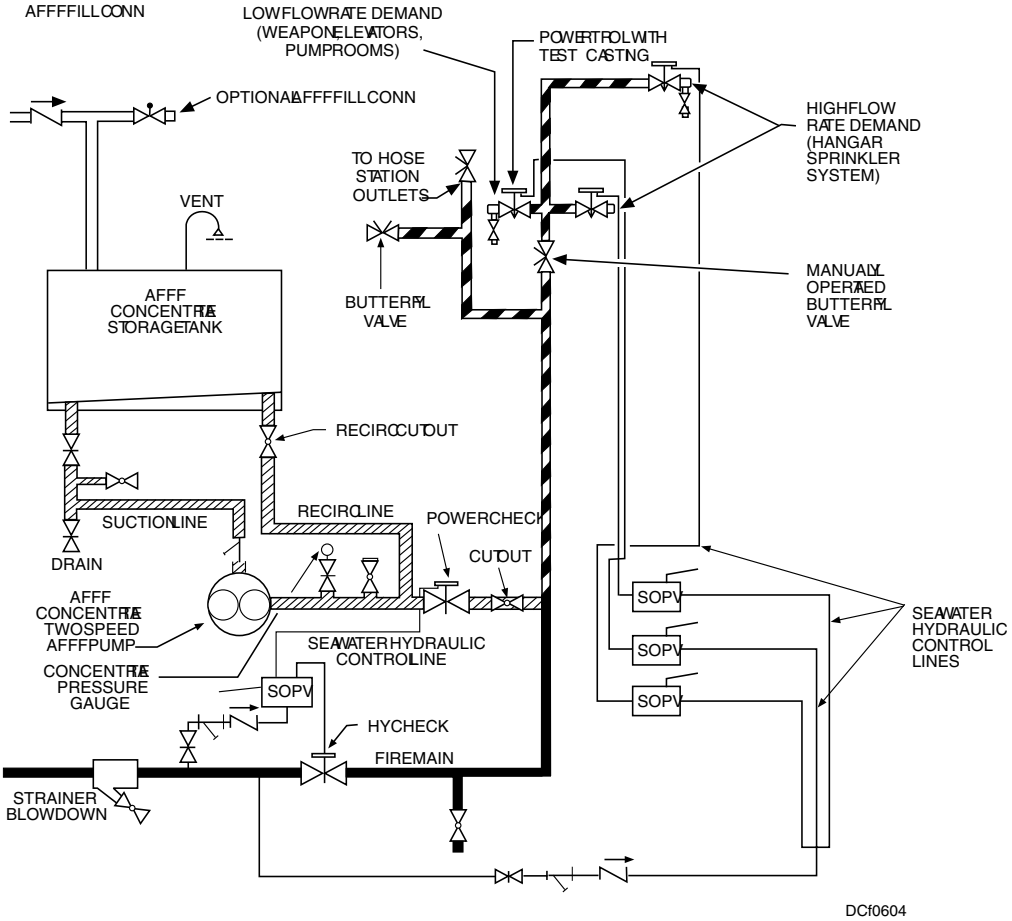

Figure 6-4. Typical two-speed AFFF system.

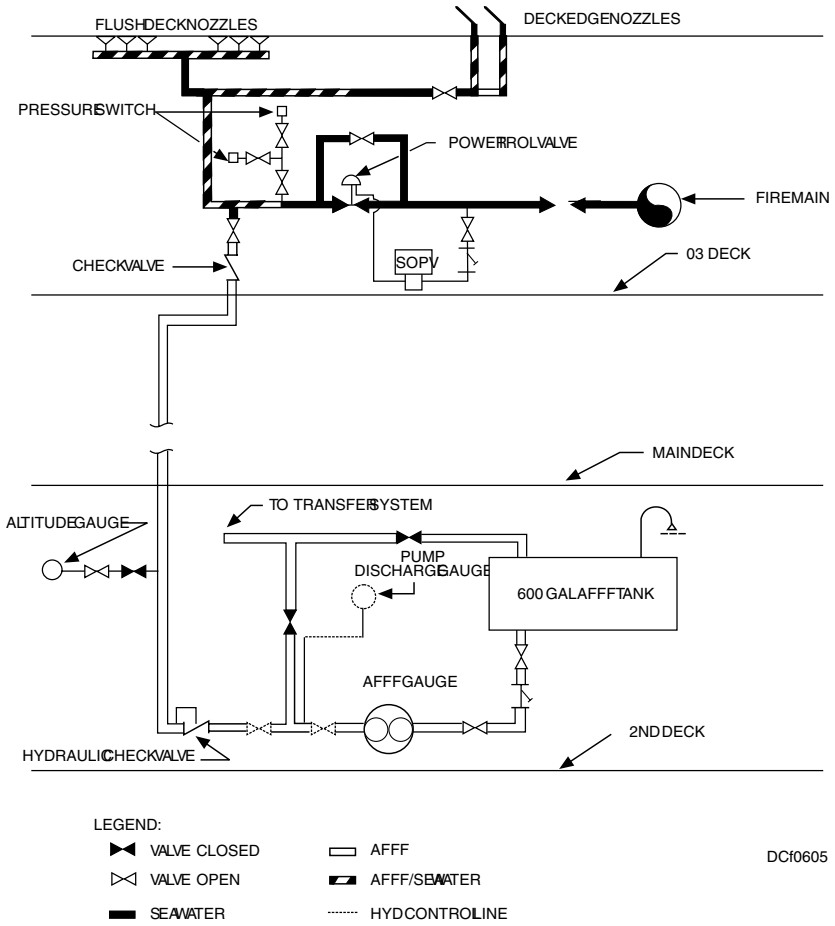

Figure 6-5. Typical high capacity single-speed pump system.

- AFFF Sprinkler System
- AFFF Transfer System
- AFFF Testing Equipment

AFFF Generating Equipment

Installed AFFF generating equipment is usually located in main machinery spaces, JP-5 pump rooms, on flight decks, and in hangars and helo bays. The reason for this is that research has revealed that these are the places where class Bravo fires most often occur.

There are two types of pumps used with the installed AFFF system. They are the AFFF single-speed injection pump and the AFFF two-speed injection pump.

AFFF Single-Speed Injection Pump

The AFFF single-speed injection pump (fig. 6-6) is a permanently mounted, positive displacement, electrically driven, sliding-vane type of pump. These pumps are provided in capacities of 12, 27, and 60 gallons per minute (gpm). The pump unit consists of a pump, a motor, and a reduction gear (except 12 gpm that is direct drive), coupled together with flexible couplings and mounted on a steel base. The pump is fitted with an internal relief valve, which opens to prevent damage to the pump. The injection pump and the injection station piping are sized to produce a 6 percent nominal concentration at peak demand by injecting AFFF concentrate into the seawater distribution system. AFFF concentrate is supplied from an AFFF tank. In some installations there is a 1-1/2-inch hose connection between the pump and the pump cutout valve. This hose connection is used to transfer AFFF concentrate to other tanks by connecting hoses between the pump and fill lines of the other tank. AFFF is transferred by manually starting the injection pump that is used to supply the washdown countermeasure system with AFFF. This action allows the system to be used as a fire-extinguishing system for flight decks, fantail, and helicopter landing flight decks and platforms. Besides washdown countermeasure systems, injection pumps also supply AFFF to reentry hose reels, well decks, and fueled vehicle stowage decks.

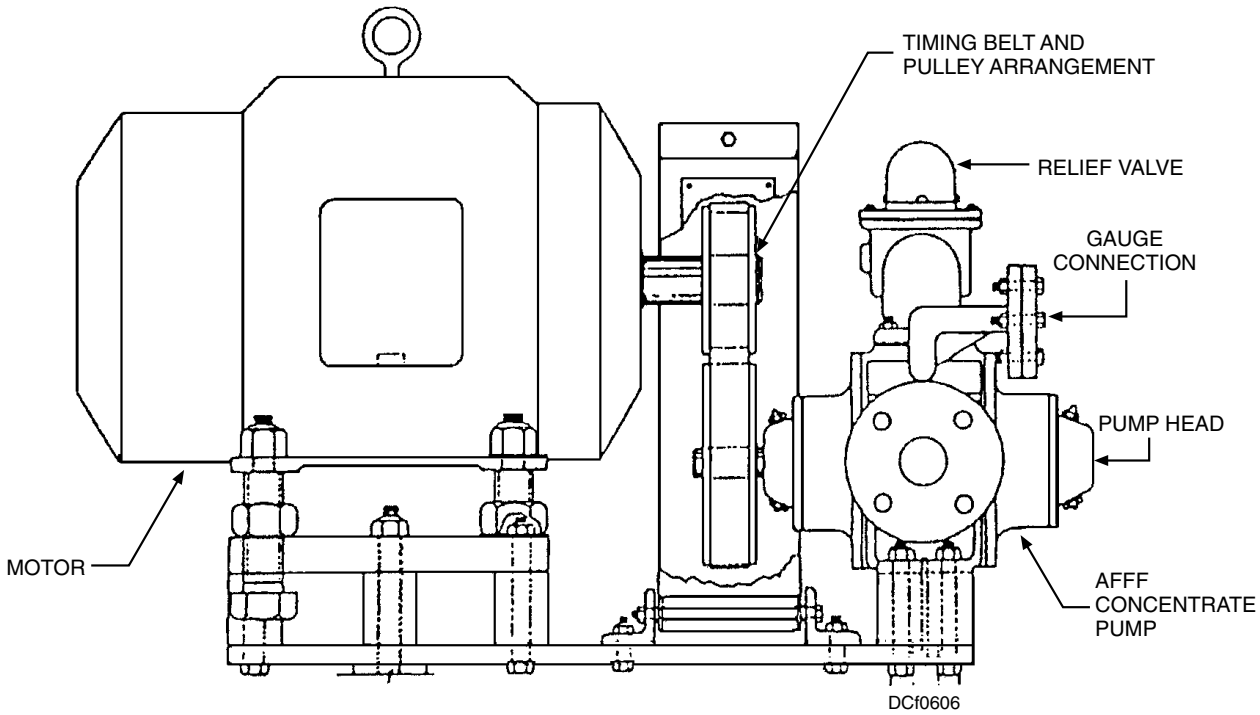

Figure 6-6. AFFF single-speed injection pump.

AFFF Two-Speed Injection Pump

The AFFF two-speed injection pump (fig. 6-7) is designed to meet the demand for either a low or a high fire-fighting capability. The two-speed AFFF pump consists of a positive displacement pump rated at 175 psi, a motor, and a reducer, coupled together with flexible couplings and mounted on a steel base. The pump is designed to inject AFFF concentrate into the seawater supply at a constant flow rate, depending on the pressure and demand of fire-fighting requirements. AFFF concentrations will exceed 6 percent in most cases. The low-speed mode is used for individual AFFF demand hose reel stations. The high-speed mode is used when fire-fighting flow rates exceed 250 gpm for hangar bay and deck-edge sprinklers and 450 gpm for bilge sprinklers. The motor on the two-speed pump receives power from a motor controller supplied by a power panel that receives main ship's power from both the ship's service switchboard and the emergency service switchboard. The power panel is equipped with an automatic bus transfer (ABT) to ensure a constant supply of electrical power to the two-speed pump. The motor controller has provisions for both local and remote control. From the local control station, the pump can be started at either high or low speed. Remote control stations are segregated into high and low demand stations. High demand stations, such as

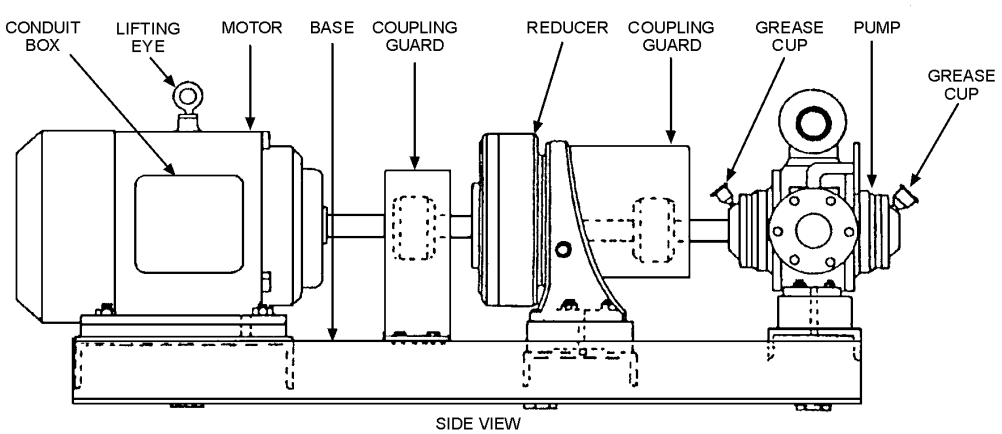

Figure 6-7. AFFF two-speed injection pump.

that for a hangar bay sprinkler system, start the pump at high speed. Low demand stations, such as that for a hose reel, start the pump at low speed. When the system is being secured, you can only stop the pump at the local control station.

AFFF Transfer Pumps

The AFFF transfer pump is a permanently mounted, single-speed, centrifugal type, electrically driven pump. These pumps are provided in 360-gpm capacity. The transfer pump moves AFFF concentrate through the AFFF fill-and-transfer subsystem to all AFFF station service tanks on a selective basis.

AFFF Tanks

AFFF is stored in service tanks of 50- to 2,000-gallon capacity and storage/transfer tanks of up to 3,500-gallon capacity. The tanks are rectangular or cylindrical in shape and are fabricated out of 90/10 copper-nickel or corrosion-resistant steel. Each service tank is located inside the AFFF station and is fitted with a gooseneck vent, drain connection, fill connection, liquid level indicator, recirculating line, and an access manhole for tank maintenance. The gooseneck vent prevents excess buildup of pressure within the tank during storage and prevents a vacuum when the system is in operation.

AFFF Valves

The AFFF system requires a variety of valves with different functions. These valves include the following:

- Powertrol valve
- Powercheck valve
- Powertrol valve with test connection
- Hytrol valve
- Hycheck valve
- Solenoid-operated pilot valve
- Balancing valve
- Balanced pressure proportioner (Type II)
- Balanced pressure proportioner (Type III)

POWERTROL VALVE.—The powertrol valve shown in figure 6-8 is a diaphragm type, normally closed, seawater pressure-operated control valve. This valve allows the flow of AFFF/seawater solution through the distribution system or controls seawater flow on flight deck injection systems. The powertrol is held closed by spring pressure. The valve is actuated when the control line is pressurized to firemain pressure by the service solenoid-operated pilot valve (SOPV). This control line pressure is exerted on the bottom of the diaphragm of the valve and the valve is forced open against the spring.

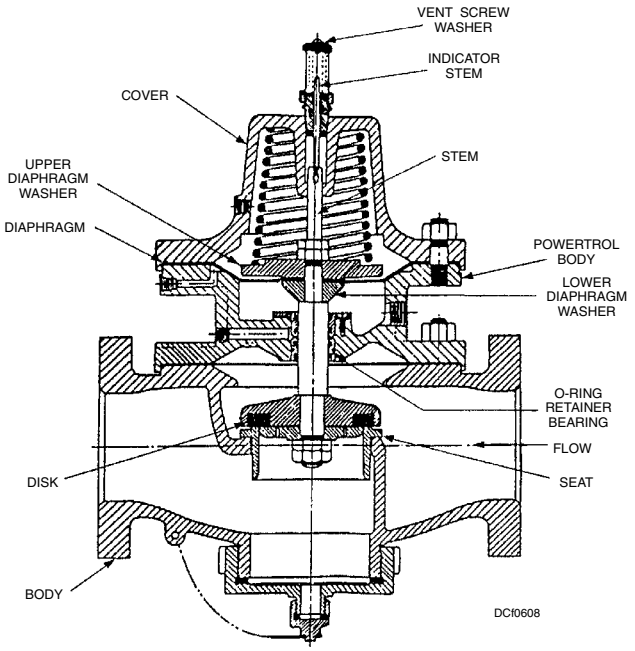

Figure 6-8. Powertrol valve.

POWERCHECK VALVE.—The powercheck valve (fig. 6-9) is a diaphragm type, normally closed, seawater pressure-operated control valve. This valve allows flow of AFFF from the pump to be mixed with seawater, and protects the AFFF tank from seawater contamination or dilution. The powercheck is essentially a powertrol valve that has a lift-check feature built into it. When there is no pressure on the control line, the upper valve spring forces the valve closed and the lift check feature is inoperative. When there is firemain pressure on the control line, this pressure acts on the bottom of the diaphragm and opens the valve against the upper valve spring. AFFF flow pushes the disk and lower stem up and allows AFFF to flow. If the back pressure downstream of the valve exceeds the pressure on the upstream side of the valve, the valve disc holder and stem will slide to the CLOSED position, preventing any backflow through the valve. On balanced pressure proportioning systems, the powercheck does not have a lower spring.

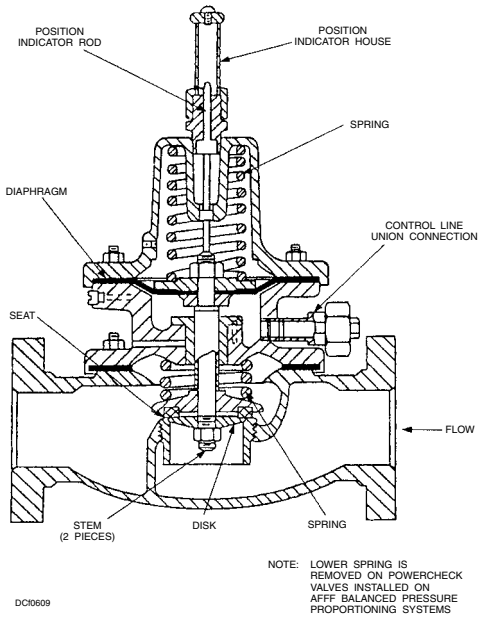

Figure 6-9. Powercheck valve.

POWERTROL VALVE WITH TEST CONNECTION.—The powertrol valve with test connection is a diaphragm-type, hydraulically operated, globe control valve. It is essentially a powertrol valve with test capabilities. This valve is normally used as a sprinkler group control valve. It would be impractical to test a sprinkler group unless the fluid flow could be diverted before it is discharged through the sprinkler heads. To perform a test, remove the test connection cap from the bottom of the valve and insert the test fitting. The test fitting has an O ring to provide a seal between the fitting and the valve seat. Connect a drain hose to the fitting and place the outlet end of the hose in a suitable location. When the operating chamber is pressurized, the valve opens. Fluid is routed over the top of the seat, diverted through the test fitting and out the drain hose. The valve is successfully tested and the sprinkler groups are dry. When the test is complete, vent the operating chamber, remove the test fitting, and reinstall the test connection cap.

HYTROL VALVE.—The hytrol valve (fig. 6-10) is a diaphragm type, fail open, seawater pressure-operated control valve which controls the flow of AFFF solution to systems. When in ready status, the top of the diaphragm is subject to spring pressure and control line pressure. When the control line pressure is removed, the firemain pressure overcomes the spring pressure and opens the valve. When an SOPV directs firemain pressure to the control line, the pressure on top of the diaphragm balances the firemain pressure on the bottom of the diaphragm and allows the spring to close the valve.

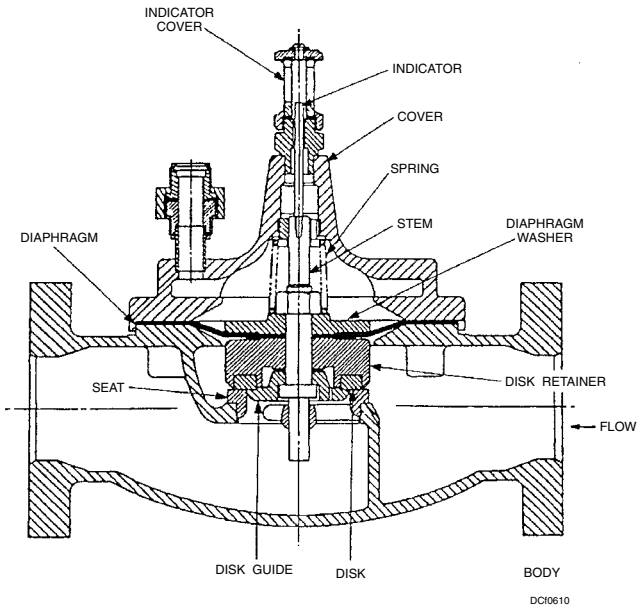

Figure 6-10. Hytrol valve.

HYCHECK VALVE.—The hycheck valve (fig. 6-11) is a diaphragm type, fail open, seawater pressure-operated control valve, which allows the flow of seawater from the firemain system to be mixed with AFFF concentrate. The hycheck is equipped with a sliding lift check feature like the powercheck valve. When the AFFF system is in standby, the hycheck is held closed by firemain pressure from the master SOPV on top of the diaphragm. When firemain pressure on the diaphragm is relieved by the master SOPV, the hycheck is forced open by firemain pressure. If foam demand stops and the AFFF/seawater solution pressure equals or exceeds the firemain pressure, the lower spring closes the valve disk. This prevents the AFFF pump from pumping concentrate back into the firemain.

SOLENOID-OPERATED PILOT VALVE (SOPV).—Solenoid-operated pilot valves (fig. 6-12) are electrically operated pilot valves that control the activation of many AFFF fire-extinguishing systems. All SOPVs (master and service) have four control line ports; one port is always connected to supply pressure (firemain), and a second port is the valve drain (which should be piped to discharge within the coaming of the AFFF station). The other two control ports are connected by control lines to diaphragm-operated control valves on master SOPVs. Service SOPVs

have one control port plugged. See technical manual NAVSEA S6435–B1–MMO–010, *Solenoid Operated Pilot Valve, Model CSM5M-3A* , for more information on SOPVs.

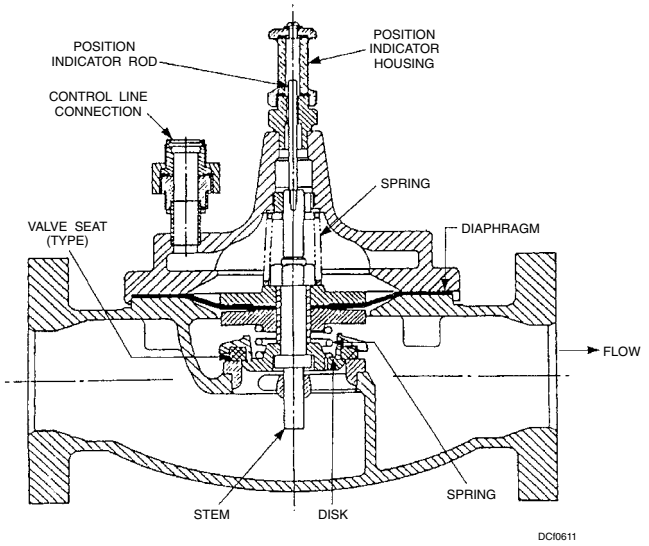

Figure 6-11. Hycheck valve.

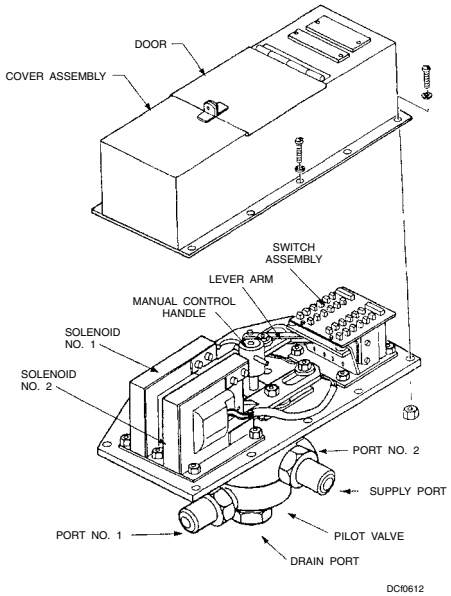

Figure 6-12. Solenoid-operated pilot valve (SOPV).

BALANCING VALVE.—The balancing valve (fig. 6-13) automatically proportions the correct amount of AFFF concentrate with seawater. The balancing valve is a diaphragm-actuated control valve that responds to pressure changes between the AFFF concentrate supply line and the firemain. Two sensing lines are attached to the balancing valve, one to monitor the pressure in the AFFF concentrate piping, and one to monitor the firemain pressure. The pressure differential between these lines moves the diaphragm in the control valve. As the AFFF/seawater flow increases, the firemain sensing line pressure drops, and the control valve adjusts by forcing more AFFF concentrate into the proportioner.

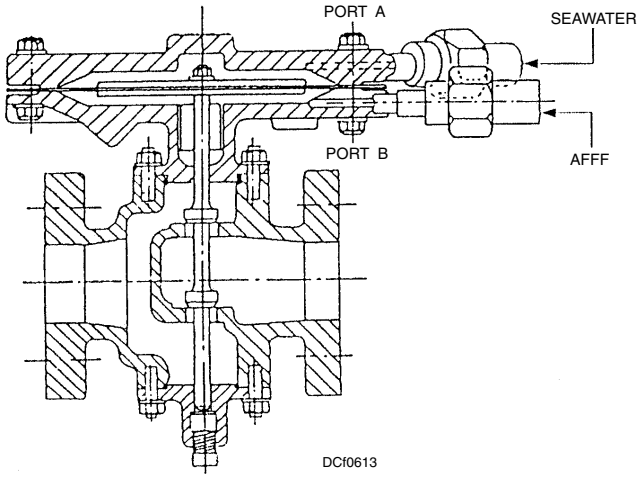

Figure 6-13. Balancing valve.

Balanced-Pressure Proportioner (Type II)

The Type II balanced-pressure proportioner (fig. 6-14), proportions the correct amount of AFFF concentrate necessary to produce effective AFFF/seawater solution over a wide range of flows and pressures. The system is actuated by activating an SOPV, electrically or manually. The SOPV will vent the operating chamber of the hycheck valve and pressurize the operating chamber of the powertrol valve. The switch assembly of an SOPV will cause electrical activation of the pump assembly (positive displacement, sliding vane, or rotary gear) via the motor controller. The pump assembly will pressurize the AFFF concentrate piping to the demand proportioned and balancing valve. Water flow through the proportioner will move the water float towards the large opening of the water sleeve, depending on the number of gallons required for fire fighting. The AFFF concentrate float is directly controlled by the movement of the water float, thus influencing the amount of AFFF concentrate that enters the water stream.

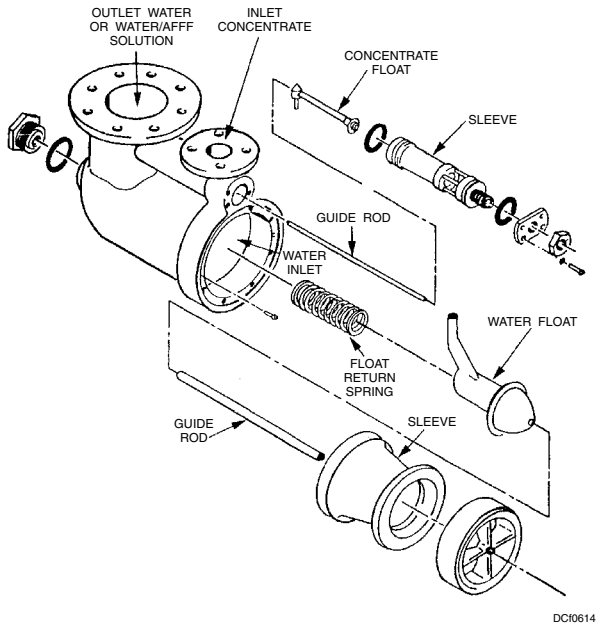

Figure 6-14. Balanced-pressure proportioner (Type II).

Water and AFFF concentrate enter the proportioner at the same pressure; hence, the name balanced pressure-proportioning system. The balanced pressure theory is a direct result of the balancing valve. One sensing line is located downstream of the hycheck valve, and another is located upstream of the AFFF concentrate discharge check valve. They route the water pressure and AFFF concentrate pressure to the operating chambers of the balancing valve. The water-sensing line is piped to the top operating chamber and the AFFF concentrate-sensing line is piped to the lower operating chamber. As the gallonage is increased or decreased through the proportioner due to demand, the water pressure will decrease or increase, respectively, in the water-operating chamber. When this happens, the balancing valve will automatically regulate the AFFF concentrate pump discharge pressure to equal the water pressure. The balancing valve will constantly recirculate the AFFF concentrate to the service tank. The amount of AFFF concentrate returned to the service tank through the recirculating piping varies. It depends on the position of the balancing valve, which is directly controlled by pressure in the water-operating chamber. Water and AFFF concentrate will be correctly proportioned in the proportioner due to the venturi principle and then discharged into the distribution piping.

Balanced-Pressure Proportioner (Type III)

The purpose, actuation of system, and balancing valve theory for the Type III balanced-pressure proportioner (fig. 6-15), are identical to those of the Type II proportioner. The Type III proportioner houses no internal moving parts and uses the venturi principle to allow for complete mixing of AFFF/seawater solution. An orifice plate controls the volume of gallons of AFFF concentrate entering the proportioner. The size of the orifice is determined by the maximum demand for fire-fighting agent placed on the system. The water-sensing line connection for the Type III proportioner is piped directly from the proportioner body to the balancing valve. Type III proportioner systems use a positive displacement, sliding vane pump.

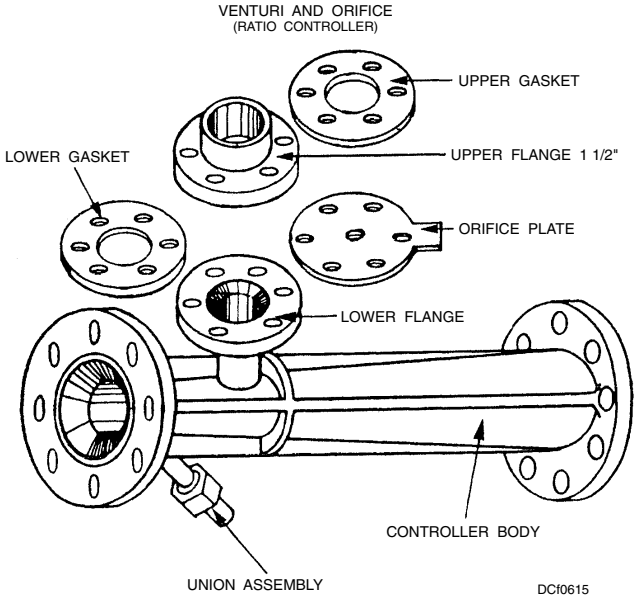

Figure 6-15. Balanced-pressure proportioner (Type III).

AFFF SPRINKLER SYSTEM

Sprinkler systems are a convenient and quick method for the fire party to apply AFFF/water solution or water to large areas of burning fuel. The system consists of a large header pipe with smaller branch connections and attached sprinkler heads. A sprinkler group control valve (powertrol or hytrol with test connection) will control the discharge flow to the sprinkler heads. An SOPV or a manual control valve may actuate the group control valve. Some sprinkler systems are activated by a manually operated cutout valve. Actuation controls for the group control valves may be located in primary flight control, the navigational bridge, the helo control, a conflagration station, locally at the AFFF generating station, and at various locations throughout the ship, depending on the sprinkler system installation and type of ship. An AFFF sprinkler system is a subsystem of AFFF generating systems. Some of the different types of sprinkler systems aboard naval ships are listed below.

- The bilge sprinkling system is located in the main and auxiliary machinery spaces with the sprinkler heads installed below the lower level deck plates. Overhead sprinkling is installed in the overhead of helo and hangar bays, well decks, vehicle cargo holds, and fuel pump rooms. Some diesel-powered ships have the overhead sprinkler system installed in the main machinery space.

- The flush-deck system uses the countermeasure washdown flush-deck nozzles to discharge AFFF/water solution during flight deck and helo deck fires. This capability is currently available to all aircraft carriers, helicopter carriers, and some auxiliary and combatant ships.

- The deck-edge sprinkler sprays AFFF/water solution over the flight deck of aircraft carriers and helicopter carriers. The system consists of spray nozzles that are positioned at the deck-edge combing of the port and starboard sides on helicopter and flight decks. The nozzles project the AFFF/water solution across the deck in an arc pattern to spray over the top of the burning fuel and aircraft.

AFFF TRANSFER SYSTEM

AFFF generating stations use large volumes of AFFF concentrate during fire fighting. The service tank alone may not contain enough concentrate to combat a conflagration-type fire. Transfer capabilities are available to replenish the AFFF concentrate service tanks. The installed system consists of a reserve transfer pump (positive displacement, sliding vane, or centrifugal), reserve storage tanks, and associated piping and valves. The transfer system can deliver AFFF concentrate to on-station service tanks via a transfer main. The transfer main consists of a large pipe with smaller branch connections interconnecting the AFFF service and storage tanks. This feature gives the on-station concentrate pump the capability of delivering AFFF concentrate into the transfer main. Once the transfer main is pressurized, either by the reserve pump or by the on-station pump, all AFFF generating station service tanks can be replenished. On-station pumps used in conjunction with jumper hoses and hose connection valves may be used to transfer AFFF concentrate. Some ships can replenish the service tanks with 55-gallon containers located near the generating station. They do this with an installed hand-operated pump or air-regulated transfer system. The air-regulated transfer system may be used to replenish reserve storage tanks. Ships may replenish service tanks or storage tanks by manually dumping AFFF concentrate from 5-gallon containers via a fill connection.

AFFF TESTING EQUIPMENT

AFFF concentrate and AFFF/seawater solution must be tested periodically to ensure that the fire party has an effective agent to combat class BRAVO fires. To accomplish the test, you must have a basic understanding of the equipment used to conduct the test. The testing equipment includes the hand refractometer and the quantab chloride titrator strip.

Refractometer

The hand refractometer gives accurate readings of total dissolved solids in aqueous solutions. If an AFFF generating system is tested according to procedures, the refractometer reading indicates the percent of solids present. For the readings to be meaningful, you must draw samples from the same water source and AFFF concentrate service tank that were used to generate the AFFF/water solution. For example, if a ship has 20 AFFF generating systems, then you must take 20 AFFF concentrate samples and 20 AFFF/water solution samples.

Use the refractometer to determine the percent of solids present in the aqueous solution samples. Once you have the readings, you can determine the percent of AFFF concentrate that is being proportioned with water by using the following formula:

RS - RW = A

RT - RW = B

$$\frac{A}{B} \times 100 = \textit{Percent of AFFF concentrate}$$

RS = the hose sample (AFFF/water solution)

RT = the service tank sample (AFFF concentrate)

RW = the water sample

Quantab Chloride Titrator

Quantab chloride titrator strips are used to measure salt (chloride) in aqueous solutions. Seawater contains approximately 20,000 ppm (parts per million) of chloride. The allowable limit for chloride contamination of AFFF concentrate is 2,000 ppm, which equates to a 10 percent contamination.

CAUTION

All approved AFFF concen- trates have been subjected to 10 percent seawater contamination tests and have passed corrosion tests for metals approved in AFFF generating systems. Contamination above the 10 percent limit causes two problems: (1) AFFF generating system components will corrode and (2) Improper AFFF/water solutions result in an ineffective fire-fighting agent.

If contamination exceeds 2,000 parts per million (ppm), the source of contamination must be identified and corrected before dumping the contents of the AFFF concentrate tank. Clean all AFFF concentrate components before replenishing the service tank. Carry out all AFFF testing procedures according to the planned maintenance requirements.

REVIEW QUESTIONS

Q7. What type of pump for the installed AFFF system is provided in capacities of 12, 27, and 60 gpm?

1. High-speed reciprocal
2. Single-speed injection
3. Centrifugal
4. Two-speed injection

Q8. AFFF is stored in storage/transfer tanks having a capacity of up to 3,500 gallons and in service tanks that vary in capacity from 50 gallons to what maximum size?

1. 1,000 gallons
2. 2,000 gallons
3. 3,000 gallons
4. 4,000 gallons

Q9. What type of seawater pressure-operated control valve allows the flow of AFFF/seawater solution through the distribution system or controls seawater flow on flight deck AFFF injection systems?

1. Hytrol
2. Balancing valve
3. Powertrol
4. Hycheck

Q10. What type of seawater pressure-operated control valve allows the flow of seawater from the firemain system to be mixed with AFFF concentrate?

1. Hycheck
2. Globe
3. Balancing valve
4. Hytrol

Q11. What type of valve automatically proportions the correct amount of AFFF concentrate with seawater?

1. Hytrol
2. Hycheck
3. Powertrol
4. Balancing valve

INSTALLED CARBON DIOXIDE (CO_2) SYSTEMS

Learning Objective: Recall the location, design, and operation of installed CO_2 systems.

Carbon dioxide (CO_2) is a colorless, odorless gas that is naturally present in the atmosphere at an average concentration of 0.03 percent. It is used for extinguishing fires because it reduces the concentration of oxygen in the air to the point where combustion stops. Typically, CO_2 concentrations of 30 to 70 percent are required to extinguish fires. Carbon dioxide extinguishers are installed in naval ships to provide a dependable and readily available means to flood (or partially flood) certain areas that present unusual fire hazards. An installed CO_2 extinguishing system has one or more 50-pound cylinders. The cylinders may be installed singly or in batteries of two or more. Except for their size and releasing mechanisms, the 50-pound portable cylinders are essentially the same as the 15-pound portable cylinders.

The two types of installed CO_2 systems are the CO_2 hose-and-reel installation and the CO_2 flooding system. The CO_2 flooding system is used for spaces that are not normally occupied by personnel.

CO_2 HOSE-AND-REEL SYSTEM

The CO_2 hose-and-reel installation (fig. 6-16) consists of two cylinders, a length of special CO_2 hose coiled on a reel, and a horn-shaped nonconducting nozzle equipped with a second control valve. When the hose and reel are both installed near the normal access, each of the two cylinders may be actuated individually. Due to space limitations, cylinders may not be located near the hose reel. When the cylinders are more than 10 feet from the hose reel, manual pull boxes are provided at the hose reel for discharging each cylinder individually.

WARNING

Grooved nut discharge heads are to be installed only for CO_2 hose reel installations. They must not be installed with CO_2 total flooding systems.

To operate a CO_2 hose-and-reel system, you should adhere to the procedure that include the steps as follows:

1. Ensure the horn valve is in the CLOSED position.
2. Open the control valve on the cylinder intended for use.
3. Unreel the hose and run the horn to the point of attack on the fire.
4. Open the horn valve by turning the lever or by depressing the squeeze grip.
5. Direct the CO_2 discharge toward the base of the fire.

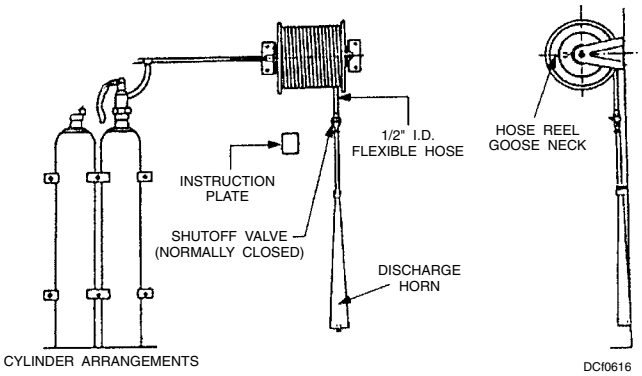

Figure 6-16. CO_2 hose-and-reel system.

CO_2 FLOODING SYSTEM

The CO_2 flooding system (fig. 6-17) consists of one or more cylinders connected by piping from the valve outlets to a manifold. Fixed piping leads from the manifold to various areas of the compartment to be flooded. Cables run from the valve control mechanisms to pull boxes that are located outside the compartment containing the cylinders. (Sometimes, the cylinders are also located outside of the compartment to be protected.) To release CO_2, just break the glass in the front of the pull box and pull the handle of the cable leading to the CO_2 cylinders.

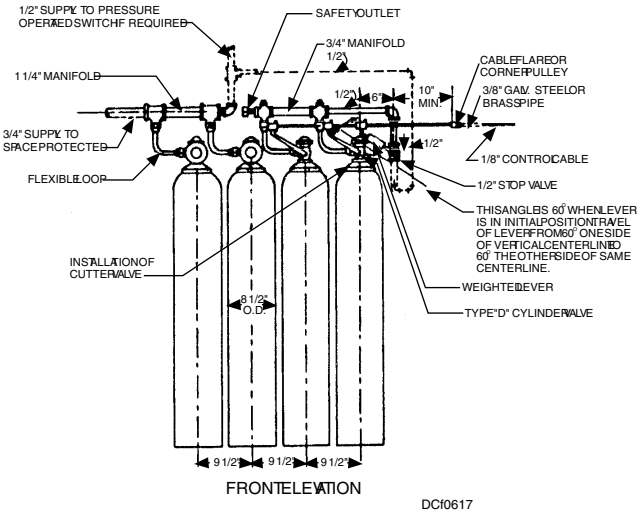

Figure 6-17. CO_2 flooding system.

There are usually one or two valve control devices in a CO_2 flooding system. The number of valve control devices provided will depend on the number of cylinders in the bank. The remaining cylinders in the bank (if any) are provided with pressure-actuated discharge heads. These heads open automatically when pressure from the controlled cylinders enters the discharge head outlet.

Several manufacturers make various components of the CO_2 systems installed on naval ships. These components differ in some minor details. Therefore, for detailed information on a specific installation, always consult the appropriate manufacturer's technical manual.

CAUTION

Before operating an installed CO_2 system, ensure all openings in the compartment are closed and the ventilation system for the space is secured. These precautions are necessary to prevent the loss of CO_2.

REVIEW QUESTIONS

Q12. The CO_2 flooding system is used for spaces that are normally occupied by personnel.

1. True
2. False

Q13. When using the CO_2 hose-and-reel system, you should always direct the CO_2 discharge toward the base of the fire.

1. True
2. False

Q14. Before operating an installed CO_2 system, you should ensure all openings in the compartment are closed and the ventilation system for the space is secured.

1. True
2. False

HALON SYSTEMS

Learning Objective: Recall the location, design components, and capabilities of shipboard Halon systems.

Halon is a halogenated hydrocarbon, which means that one or more of the hydrogen atoms in each hydrocarbon molecule have been replaced by one or more atoms from the halogen series (fluorine, chlorine, bromine, or iodine). A Halon numbering system has been developed to provide a description of the various halogenated hydrocarbons. The first digit in the number represents the number of carbon atoms in the molecule; the second digit, the number of fluorine atoms; the third digit, the number of chlorine atoms; the fourth digit, the number of bromine atoms; and the fifth digit, the number of iodine atoms, if any. In this system, terminal zero digits, if any, are not expressed.

The two types of Halon used aboard Naval ships are Halon 1301 and 1211. Halon 1301 is the most commonly used type because it is installed and used in fixed flooding systems for extinguishing flammable liquid fires.

Halon 1211 is a colorless gas that has a sweet smell and is known chemically as bromochlorodifluoromethane. It is used for twin agent aqueous film-forming foam (AFFF)/Halon 1211 applications on some flight and hangar deck mobile fire-fighting apparatus. Portable 20-pound Halon 1211 fire extinguishers are installed in MHC-51 class coastal minesweeping ships and air-cushion landing craft (LCAC). Halon 1211 is stored and shipped as a liquid and pressurized with nitrogen gas. Pressurization is necessary since the vapor pressure is too low to convey it properly to the fire area.

Halon 1211 is not used in total flooding systems. It has a low volatility combined with a high liquid density, which permits the agent to be sprayed as a liquid. As a liquid spray Halon 1211 may be propelled into the fire zone more effectively than is possible with other gaseous agents. Halon 1211 is used in twin agent systems installed on mobile firefighting apparatus on carrier type ships. For flight and hangar deck fire-fighting procedures, refer to NAVAIR 00-80-R-14, NATOPS *U.S. Navy Aircraft Firefighting and Rescue Manual*.

Both Halon 1211 and 1301 chemically inhibit the flame front of a fire. Halon decomposes upon contact with flames or hot surfaces above 900°F (482°C). Decomposition products are principally hydrogen fluoride and hydrogen bromide, which have a sharp irritating odor even at low concentrations.

The short discharge time of Halon 1301 (10 seconds maximum) keeps the thermal decomposition products well below lethal concentrations. However, a real hazard lies in the products of combustion from the fire such as carbon monoxide. These products combined with oxygen depletion, heat, and smoke pose a great hazard to personnel.

WARNING

> Personnel should not remain in a space where Halon 1301 has been released to extinguish a fire unless some type of breathing apparatus is worn.

Most people can be exposed to a 5 to 7 percent concentration of Halon 1301 for a period up to 10 minutes without danger to their health. However, safety precautions dictate that spaces should be evacuated anytime a Halon system discharge occurs.

Human exposures to both Halon 1301 and to Halon 1211 have shown that Halon 1301 concentrations up to about 7 percent by volume, and Halon 1211 concentrations of 2 to 3 percent by volume, have little noticeable effect on personnel. At Halon 1301

concentrations between 7 and 10 percent and Halon 1211 concentrations between 3 and 4 percent, personnel experienced dizziness and tingling of the extremities, indicative of mild anesthesia. At Halon 1301 concentrations above 10 percent and Halon 1211 concentrations above 4 percent the dizziness becomes pronounced, the subjects feel as if they will lose consciousness (although none have), and physical and mental dexterity is reduced.

The discharge of Halon 1211 to extinguish a fire may create a hazard to personnel from the natural Halon 1211 itself and from the products of decomposition that result from the exposure of the agent to the fire or other hot surfaces. Prolonged exposure to concentrations greater than 4 percent carries with it the possible risk of unconsciousness and even death. Although Halon 1211 vapor has a low toxicity, its decomposition products can be hazardous. When using Halon 1211 in unventilated or confined spaces, operators and others should avoid breathing the gases, and should only use the agent needed to accomplish extinguishment. Although they are potentially hazardous, no significant adverse health effects have been reported from the use of Halon 1301 or 1211 as a fire-extinguishing agent since their introduction into the marketplace 30 years ago.

WARNING

In flammable gas cylinder storerooms, 20 percent Halon 1301 is required to extinguish a fire. Therefore, if the system is activated, personnel must leave the space immediately.

Direct contact with vaporizing Halon 1301 and Halon 1211 liquid has a strong chilling effect on objects and can cause frostbite and burns to the skin. The liquid phase vaporizes rapidly during discharge and therefore limits this hazard to the immediate vicinity of the nozzle.

High velocity discharge from nozzles is sufficient to move unsecured paper and light objects, which could cause personnel injury. Discharge of a total flooding system can cause noise loud enough to be startling.

In humid atmospheres, reduction in visibility may occur due to condensation of water vapor in the air.

Halon 1211 and Halon 1301 are severe ozone depleting substances. These agents should be used only against actual fires. Any Halon cylinder containing only a partial charge, or is being turned in to supply, shall not be vented to the atmosphere for any reason.

Halon 1301 (known chemically as bromotrifluoromethane) consists of one atom of carbon, three atoms of fluorine, no chlorine atoms, one bromine atom, and no iodine atoms. For shipboard installation, Halon 1301 is super pressurized, with nitrogen, and stored in gas cylinders as a liquid. When released, it vaporizes to a colorless, odorless gas with a density of approximately five times that of air Halon 1301 systems (fig. 6-18). It may be installed in main machinery rooms, fire rooms, engine rooms, auxiliary machinery rooms, fuel pump rooms, ship service or emergency generator rooms, auxiliary boiler rooms, main propulsion or generator engine modules, helicopter recovery assist, securing and traversing (RAST) areas, machinery rooms, tactical towed array sonar (TACTAS) handling rooms, and in spaces where flammable liquids are stored or issued. Aboard aircraft carriers, gas-powered bomb hoist storerooms may be protected by Halon 1301.

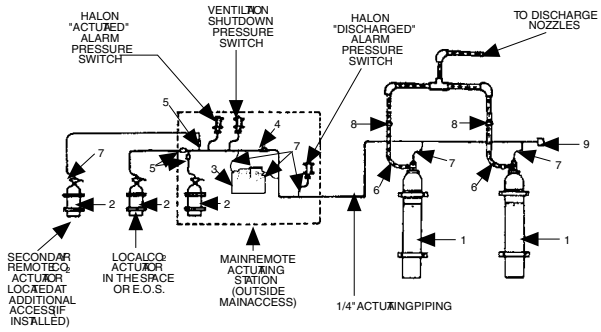

ITEM NO	COMPONENT
1	HALON CYLINDER
2	MANUAL CO_2 ACTUATOR
3	TIME DELAY DEVICE
4	TIME DELAY BYPASS VALVE
5	1/4" CHECK VALVE
6	1-1/2" FLEXIBLE HOSE
7	1/4" FLEXIBLE HOSE
8	1-1/2" CHECK VALVE
9	VENT FITTING

NOTES:

1. 1/4" ADAPTER FITTINGS ARE NOT SHOWN. LOCATION IS BETWEEN 1/4" PIPING AND 1/4" FLEXIBLE HOSE (7).
2. QUANTITY AND SIZE OF HALON CYLINDERS VARIES FOR EACH INSTALLATION.
3. 1-1/2" CHECK VALVE MAY NOT BE INSTALLED WHEN THERE IS ONLY ONE CYLINDER.

——— = CO_2 FLOW
..... = HALON FLOW

DCI0618

Figure 6-18. Halon 1301 system.

Halon systems use one or more cylinders containing Halon 1301 in a liquid form. The function of the system is to extinguish fires that are beyond the capacity of portable fire extinguishing equipment, and where abandonment of the space is necessary.

COMPONENTS

The components of the Halon system include the following:

- Halon 1301 cylinders
- 5-pound CO_2 actuators
- Vent fittings
- 1/4-inch copper nitrogen tubing connections with a 4-inch loop that are called actuation lines
- Flexible discharge hoses
- Check valve
- Time-delay device
- Time-delay device bypass valve
- CO_2 actuation system piping
- Pressure switches
- Halon discharge piping
- Discharge nozzles
- In-line filter
- Electrically operated alarms and indicators

LOCATION

The usual location for Halon cylinders is inside a protected compartment within a space; however, they may be located outside or in a Halon cylinder room. Halon systems placed in machinery spaces (Main Machinery Rooms, Firerooms, Engine Rooms, Auxiliary Machinery Rooms) will have 60-second time delays. In compartments other than Machinery Spaces, Halon systems usually have a 30-second time delay, and only a primary Halon system. Engine enclosures or modules have a 30-second time delay for both primary and reserve Halon systems.

CAPABILITIES

Each system is designed so a single discharge of Halon 1301 provides a concentration of 5 to 7 percent Halon 1301 by volume of air throughout the protected space. Sufficient Halon is required so the concentration will remain at a minimum of 5 percent for 15 minutes. Some Halon protected spaces have a duplicate reserve Halon system to supplement the primary one. Each Halon fixed-flooding system is designed to discharge completely the Halon 1301 gas into the protected space within 10 seconds following the start of the discharge.

SYSTEM ACTUATION AND FEATURES

Each system is usually provided with more than one CO_2 actuator station. The actuators can be installed either inside or outside the space. Features of the system include automatic ventilation shutdown, actuation of local and remote alarms, manual time delay bypass, and halon discharge indicator light.

SYSTEM OPERATION

Normal operation of the halon system may be accomplished by performing the following actions:

1. Break the glass or open the enclosure at a remote actuating stations. Remove the safety pin, which is secured by a lead and wire seal.

2. Fully operate the discharge lever and secure it in the OPERATE position. The released carbon dioxide will immediately actuate two pressure switches. One pressure switch operates lights and horns (or bells) within the space, and a bell and amber system actuated light outside the space at actuating stations and space accesses. The other pressure switch will initiate shut down of ventilation fans and operate any installed vent closures.

3. If alarms do not operate, or ventilation does not shut off, pull out the reset/actuation knob on the associated pressure switch. If operation still does not occur, manually shut off ventilation systems, and pass the word to evacuate the space.

4. After the time delay operates, the carbon dioxide pressure will operate the Halon cylinder valves to discharge Halon to its associated nozzles. A third pressure switch downstream of the time delay device will then actuate a red light indicating Halon discharge.

5. In the event the timing of the time delay device exceeds 70 seconds (for a 60-second device), or 35 seconds (for a 30-second device), the time delay should be bypassed by opening the time delay bypass valve.

WARNING

The time delay bypass valve should not be operated until after the full delay time of 30 or 60 seconds has passed.

Additional features include automatic ventilation shutdown, actuation of local and remote predischarge alarms, manual time delay bypass, automatic ventilation closures (if installed), and Halon discharged indicator light.

An AFFF bilge sprinkling system normally supplements Halon 1301 systems in machinery spaces and pump rooms. The AFFF bilge sprinkling system, where installed, should be actuated at the same time as the Halon system. AFFF bilge sprinkling systems are not installed if the bilge is too shallow.

REVIEW QUESTIONS

Q15. Halon systems are used to extinguish fires that are beyond the capacity of portable fire extinguishing equipment, and where abandonment of the space is necessary.

1. True
2. False

Q16. The full discharge of the gas from a Halon 1301 system into a protected space is completed in how many seconds?

1. 10
2. 20
3. 30
4. 40

Q17. What type of system normally supplements Halon 1301 systems in machinery spaces and pump rooms?

1. APC
2. PKP
3. AFFF
4. Magazine sprinkler

AQUEOUS POTASSIUM CARBONATE (APC)

Learning Objective: Recall the location, design components, and operation of a typical installed aqueous potassium carbonate (APC) fire-extinguishing system.

Aqueous potassium carbonate (APC) fire-extinguishing systems (fig. 6-19) are installed in Navy ships to provide protection for galley deep-fat and doughnut fryers and their exhaust systems. Aqueous potassium carbonate is specifically formulated to extinguish fire in the reservoirs by combining with the hot cooking-oil surface to form a combustion-resistant soap layer, thereby cutting off the grease from its source of oxygen. There is little or no cooling with APC. A typical APC fire-extinguishing system is shown in figure 6-19. For more information about the APC fire extinguishing system, refer to the technical manual NAVSEA S9555–AR–MMO–010, *Fire Extinguishing System, Deep-Fat and Doughnut Fryer.*

COMPONENTS

Each APC system includes one or two cylinders filled with a solution of potassium carbonate in water pressurized with compressed nitrogen (N_2). Discharge piping from the cylinder(s) leads to one or more nozzles which spray the solution into the cooking oil reservoirs, along the galley hood plenum, or up into the galley hood exhaust duct. A spring-tensioned cable keeps the system inactive. When this tension is released, the system is activated and N_2 is released from a pressurized cartridge. This action opens the lever control heads, releasing the aqueous potassium carbonate.

OPERATION

Operation of the APC fire-extinguishing system is normally fully automatic. Manual backup modes of operation are provided at the cylinder assembly, pressure release control box, and the remote manual control box.

Automatic Operation

Excessive heat on one of the fusible links melts the link and releases the cable tension. The extension spring in the pressure-control box pulls the lever, which activates the pressure release cartridge. N_2 gas from the pressure-release cartridge activates the lever control head(s), causing the cylinder(s) to discharge.

Manual Operation

The aqueous potassium carbonate (APC) system has three manual modes of operation:

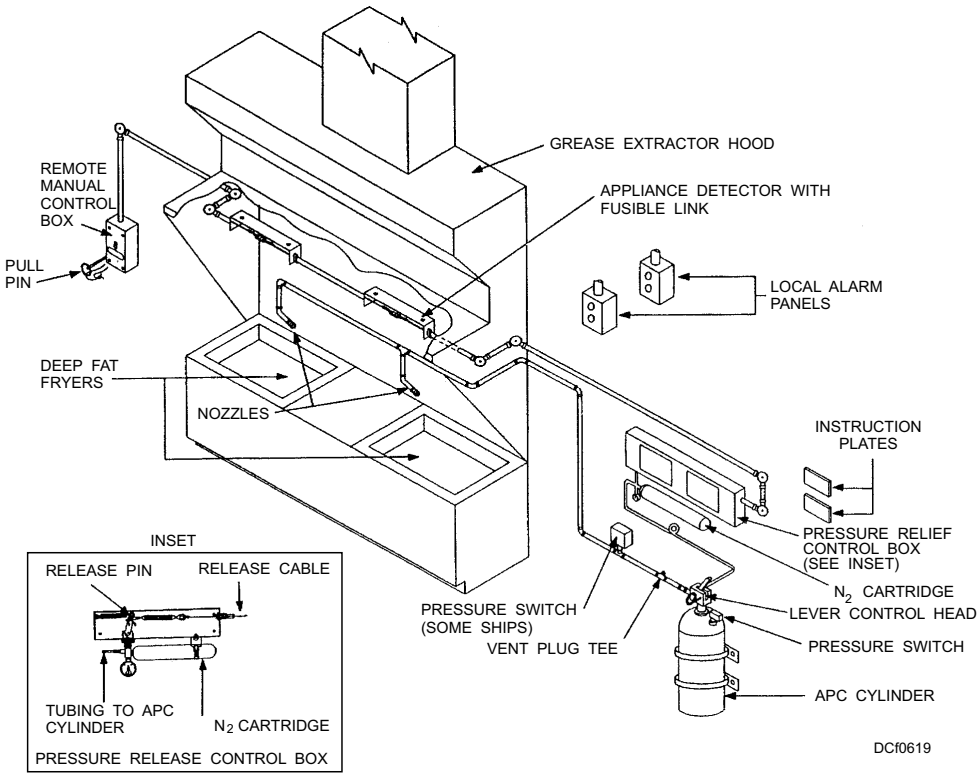

Figure 6-19. Aqueous potassium carbonate (APC) fire extinguishing system.

1. At the cylinder assembly, remove the release pin in the lever-control head completely, and operate the lever. This discharges the cylinder directly.

2. At the pressure release control box, open the box and remove the release pin completely. This disconnects the release cable and allows the extension spring to activate the system as described under automatic operation.

3. At the remote manual-control box, remove the release pin completely. This disconnects the anchored end of the release cable, releases the tension, and allows the extension spring to activate the system as described under automatic operation.

REVIEW QUESTIONS

Q18. Aqueous potassium carbonate (APC) fire-extinguishing systems are installed in naval ships to provide protection for deep fat and doughnut fryers and their exhaust systems.

1. True
2. False

Q19. Each APC system includes one or two cylinders filled with a solution of potassium carbonate in water pressurized with what type of compressed gas?

1. Oxygen
2. Bromine
3. Helium
4. Nitrogen

Q20. The APC system has a total of how many manual modes of operation?

1. One
2. Two
3. Three
4. Four

SUMMARY

In this chapter, you have been introduced to the design and function of the major installed shipboard fire-fighting systems. The systems include the firemain systems, magazine sprinkler systems, aqueous film-forming foam (AFFF) systems, carbon dioxide (CO_2) systems, Halon systems, and the aqueous potassium carbonate (APC) system.

REVIEW ANSWERS

A1. The firemain system is used primarily to supply seawater to what other systems? **(4) Fireplug and sprinkling systems**

A2. There is a total of how many basic types of firemain systems designed for use on large Navy ships? **(3) 3**

A3. What type of firemain system is separated both vertically and athwartship? **(4) Vertical offset loop**

A4. Sprinkler systems are used for emergency cooling of, and fire fighting in, magazines, ready-service rooms, ammunition, and missile handling areas. **(1) True**

A5. What are the two basic types of hydraulically controlled sprinkler systems used on naval ships? **(3)The firemain-operated dry type and the firemain-operated wet type.**

A6. What Navy rating maintains the magazine sprinkler systems? **(1) Gunner's Mate**

A7. What type of pump for the installed AFFF system is provided in capacities of 12, 27, and 60 gpm? **(2) Single-speed injection pump**

A8. AFFF is stored in storage/transfer tanks having a capacity of up to 3,500 gallons and in service tanks that vary in capacity from 50 gallons to what maximum size? **(2) 2,000 gallons**

A9. What type of seawater pressure-operated control valve allows the flow of AFFF/seawater solution through the distribution system or controls seawater flow on flight deck AFFF injection systems? **(3) Powertrol**

A10. What type of seawater pressure-operated control valve allows the flow of seawater from the firemain system to be mixed with AFFF concentrate? **(1) Hycheck**

A11. What type of valve automatically proportions the correct amount of AFFF concentrate with seawater? **(4) Balancing valve**

A12. The CO_2 flooding system is always used in spaces that are normally occupied by personnel. **(2) False. The CO_2 flooding system should only be used in spaces that are normally NOT occupied by personnel.**

A13. When using the CO_2 hose-and-reel system, you should always direct the CO_2 discharged from the hose toward the base of the fire. **(1) True**

A14. Before operating an installed CO_2 system, you should ensure all openings in the compartment are closed and the ventilation system for the space is secured. **(1) True**

A15. Halon systems are used to extinguish fires that are beyond the capacity of fire extinguishing equipment, and where abandonment of the space is necessary. **(1) True**

A16. The full discharge of the gas from a Halon 1301 system into a protected space is completed in how many seconds? **(1) 10 seconds**

A17. What type of system normally supplements Halon 1301 systems in machinery spaces and pump rooms? **(1) AFFF. An AFFF sprinkling system normally supplements Halon 1301 systems in machinery spaces and pump rooms.**

A18. Aqueous potassium carbonate (APC) fire-extinguishing systems are installed in naval ships to provide protection for deep-fat and doughnut fryers and their exhaust systems. **(1) True**

A19. Each APC system includes one or two cylinders filled with a solution of potassium carbonate in water pressurized with what type of compressed gas? **(4) Nitrogen**

A20. The APC system has a total of how many manual modes of operation? **(3) Three manual backup modes of operation are provided at the cylinder assembly, the pressure release control box, and the remote manual control box.**

CHAPTER 7
FIRE-FIGHTING TACTICS

Learning Objective: Recall the characteristics of different classes of fire, the stages of a fire, and the basic tactics and strategies to attack and extinguish different classes of fires, and the fire-fighting equipment used.

As a Damage Controlman, you will most likely encounter different types of fires aboard your ship. Although fires have certain things in common, each fire has its own unique features. Examples of some unique features of each fire are the type of material burning, the ease with which the fire can be isolated, or the location of the compartment it is in. With these factors in mind, it is easy to see that there are many things to consider when deciding what tactics to employ to attack a fire. Therefore, fire parties and repair lockers are trained to respond to a variety of situations.

FIRE-FIGHTING STRATEGIES

Learning Objective: Recall the characteristics of different classes of fire, the stages of a fire, and the basic tactics and strategies to attack and extinguish the different classes of fires.

As you become more proficient in fire fighting, combat evolutions, and dealing with engineering casualties, you develop the ability to handle more than one single casualty at a time. Your training prepares you for cascading or multiple casualties, and the opportunity to practice your training should be a learning experience. A mass conflagration is a worst-case scenario. For example, some ships have survived multiple missile hits, others mine explosions and flooding. Your ability to think clearly in the face of multiple casualties may someday save your ship. Creativity counts! For example, firemain ruptures may be jumpered around, or P-100 pumps may replace fire pumps if a casualty occurs to the ships electrical system. The ability to shore up a weak bulkhead is not learned from a book – you must practice. Do you have the skills to rig casualty power cables to return a vital system to service? There are many such scenarios; keeping your cool and remembering your training is vital to the survival of your ship. Your training prepares you to take on different positions on an attack team, or in a fire party. Should a personnel casualty require a replacement, fire party qualifications allow personnel to replace each other as needed.

Fire can spread in many different ways. Radiant heat from an intense fire may ignite materials in an adjacent compartment, or it may travel through inoperative ventilation ducts, which failed to shut. Openings between compartments, including cableways, may contribute to the spread of fire. The first sign of the fire spreading is smoke. If you are an investigator, you must constantly rove an assigned area outside the primary fire boundaries. You must also ensure that personnel assigned as boundarymen are well qualified for their job. Report any encounters with smoke outside the primary fire and smoke boundaries; then use your breathing apparatus to investigate, if possible. If the fire spreads, then the secondary boundary becomes the primary boundary, and personnel must attack this new threat to the ship.

It is the job of the damage control chain of command to make fire-fighting decisions that are based on reports from the scene, from investigators, and from boundarymen. A small fire can become a blazing inferno in a very short period of time, quickly making a compartment or area of the ship uninhabitable. When your ship is underway, you cannot use the strategies and methods used ashore. You cannot wait for the fire department – YOU ARE THE FIRE DEPARTMENT.

PROPERTIES AND DYNAMICS OF FIRE

Learning Objective: Recall the properties and dynamics that are characteristic of each of the four classifications of fire.

There are four classifications of fire and each classification has its own distinct properties and dynamics.

CLASS ALPHA FIRE

Generally speaking, a class ALPHA fire is any fire in which the burning material leaves an ash. Paper, wood, and cloth are examples of this fuel, and are located throughout your ship. These solid fuels must be heated to their ignition point before they will burn, and there must be enough oxygen to support the fire.

For a solid fuel to burn, it must be changed into a vapor state. This chemical action is known as *pyrolysis* and is defined as a chemical decomposition due to the application of heat. This decomposition creates a fuel vapor, which, mixed with oxygen, produces a fire.

Removal of any one of the three elements of the fire triangle (heat, oxygen, and fuel) will extinguish a fire. A common method of attacking class ALPHA fires is the application of water. The water cools the fuel below its ignition point, thereby removing heat from the fire triangle and thus extinguishing the fire. On larger fires of this type, aqueous film-forming foam (AFFF) will be more effective than seawater. In all such fires, other nearby combustibles (including unseen materials on the other side of that bulkhead) must either be moved or kept cool to prevent further spread of the fire.

CLASS BRAVO FIRE

A class BRAVO fire presents challenges not encountered in other types of fires. This is because they can be fueled by any of the flammable liquids stored aboard ship, including fuels, liquid lubricants, and solvents. Class BRAVO fires may be extinguished with Halon, AFFF, purple-K powder (PKP), or a combination of agents. The single most important step in combating this casualty is to secure the source of the fuel.

One of the characteristics of a flammable liquid is known as flashpoint, which is the lowest temperature at which the liquid will give off sufficient vapor to form what is known as an ignitable mixture. When mixed with air at this minimum temperature, this vapor will ignite if an ignition source is present.

WARNING

Fuels and other liquids stored aboard ship are often pressurized (to pump them to other areas of the ship), or may be stored under pressure to minimize the release of vapors. Leaks in these pressurized fuel systems will tend to spray outward, and they often atomize, increasing the possibility of coming into contact with an ignition source. As an example, the ignition source could be a heated surface in an engineering compartment or an electrical spark from a faulty electrical component.

When flammable liquids spill or leak from a pressurized source, they will cover a large area, release a great amount of vapor, and produce a great amount of heat when ignited. One of the specifications of flammable liquids is that they have a minimum flashpoint. Anytime a ship is refueled, the fuel it receives is tested for both quality and for flashpoint.

Some flammables require special storage, often in special lockers with temperature detection and sprinkler systems installed. Some of the materials stored in these lockers are paints, welding gases, flammable cleaning solvents, and other materials. An accurate inventory of hazardous materials stored in such lockers should be readily available. Fuels for portable fire-fighting pumps and special small boats may sometimes be stored on the weather decks of the ship.

Your ship's supply department can provide information about flammable materials (including safety and handling precautions, hazards, and minimum flashpoints). The Material Safety Data Sheets (MSDS) have information on each individual hazardous product carried onboard ship.

CLASS CHARLIE FIRE

A class CHARLIE fire is an energized electrical fire, and may be attacked with nonconductive agents such as carbon dioxide (CO_2) or with low-velocity water fog. Special care must be taken to maintain a safe distance from energized equipment. The most common (and safest) method of dealing with a class CHARLIE fire is to secure the electrical power, and treat it as a class ALPHA (burning insulation) fire.

WARNING

Special care must be taken to avoid contact with energized electrical equipment. CO_2 bottles must be grounded, and the horn of the portable extinguisher must not come in contact with the energized equipment. If it is necessary to use water fog as an extinguishing agent, a minimum distance of 4 feet must be maintained. A straight stream of water must never be used on a class CHARLIE fire, due to the likelihood of electrical shock.

CLASS DELTA FIRE

Class DELTA fires are also known as combustible metal fires. This class of fire results when materials such as magnesium, phosphorus, sodium, or titanium are ignited. Certain types of aircraft wheels are manufactured from these materials, as well as various pyrotechnic smokes and flares. Although some ships have pyrotechnic (referred to as "pyro") magazines below decks, typically most occurrences of DELTA fires happen topside, where storage is more common.

Pyrotechnics often contain their own oxidants and therefore do not depend on atmospheric oxygen for combustion. For this reason, the exclusion of air, such as by use of PKP, foam, or other extinguishers, will typically be ineffective.

WARNING

Class DELTA fires burn with an intense heat of up to 4,500°F, and action must be taken to shield your eyes from the brilliance of the flame. High velocity fog should be used to cover and cool these fires. If possible, remove the burning material by jettisoning it over the side of the ship. To prevent the fire from spreading, you should apply large quantities of water at low pressure to cool the surrounding area. Class DELTA fires give off extreme amounts of heat and can produce explosions. Therefore, you must maintain a safe distance from the source of the fire while applying the water fog.

WARNING

During a class DELTA fire, certain chemical reactions are occurring as the water is applied to cool the surrounding area. This water reacts with the burning metal and forms hydrogen gas, which will either burn or explode, depending on the intensity of the fire and the amount of burning material. In any case, maintain a safe distance from the fire and shelter yourself and your team from any potential explosions.

DYNAMICS OF A FIRE

The fact that there is a large variety of materials aboard any ship which can burn and should be considered as fuels cannot be overemphasized. As stated before, for a solid fuel to burn, it must be changed into a vapor state. This chemical action is known as pyrolysis and is defined as a chemical decomposition due to the application of heat. This decomposition creates a fuel vapor. When this vapor is mixed with oxygen at the right temperature, a fire is produced.

A solid fuel will burn at different rates depending upon its size and configuration. For example, a pile of wood chips or wadded paper will burn faster than an equal amount of solid wood or a case of paper. This fact is true because there is a larger surface area exposed to the heat; therefore vaporization occurs faster. Because more vapor is available for ignition, the fire burns more intensely and the fuel is consumed at a faster rate.

A liquid fuel releases vapor much as a solid fuel does. However, it does so at a higher rate and over a larger temperature band. Because liquids have more loosely packed molecules, heat increases their rate of vapor release. These dynamics result in the fact that pound-for-pound liquid fuels produce about 2 1/2 times more heat than wood, and this heat is given off much more rapidly.

If a flammable liquid is spilled (or is atomized and sprayed out under pressure) it covers a very large surface area and gives off much more vapor. This is one reason flammable liquid (class BRAVO) fires burn so violently.

As mentioned earlier, the lowest temperature at which a liquid gives off sufficient vapor to form an ignitable mixture is known as the flashpoint for that liquid. An ignitable mixture is a mixture of vapor and air that is capable of being ignited by an ignition source. As an example, gasoline has a flashpoint of -45°F (-43°C). This factor makes gasoline a constant hazard because it produces flammable vapor at normal temperatures. Like gasoline, the other shipboard fuels have specified minimum flashpoints.

To ignite, a flammable gas or vapor of a liquid has to mix with air in the proper proportion. The lowest percentage of gas that will make an ignitable mixture is called its lower explosive limit (LEL). If there is less vapor or gas than this percentage, then the mixture is too lean to burn. Conversely, there is also an upper explosive limit (UEL) above which the mixture is too rich to burn.

Table 7-1. Properties of Selected Flammable Liquids and Gases

Material	Flashpoint	LEL	UEL	Ignition Temp
Acetylene	gas[1]	2.5%	100%	581° (305° C)
Carbon Monoxide	gas[1]	12.5%	74.0%	1128° (609°C)
Cooking Oil	610°F[6]	____[3]	____[3]	740°F-830°F[6] (393°C-443°C)
Ethyl Alcohol	55°F (13°C)	3.3%	19.0%	685°F (363°C)
Fuel, Navy Distillate (F-76) (MIL-F-16884)	140°F (60°C)	____[2]	____[2]	450°F (232°C)
Gasoline (100 Oct)	-45°F (-43°C)	1.4%	7.6%	853°F (456°C)
Hydraulic Fluid Mil-H-17672: 2075 TH	315°F (157°C)	____[3]	____[3]	____
2110 TH	325°F (163°C)	____[3]	____[3]	685°F (363°C)
2135 TH	340°F (171°C)	____[3]	____[3]	____
Hydrogen	gas[1]	4.0%	75.0%	932°F (500°C)
JP-4 (MIL-T-5624)	0°F (-18%C) (NSTM 542)	1.3%	8.0%	464°F ((240°C)
JP-5 (MIL-T-5624)	140°F (60°C)	0.6%	4.6%	475°F (246°C)
JP-8	100°F (38°C)	0.7%	5.0%	444°F (229°C)
Lubricating Oil: 2190 TEP (MIL-L-17331)	400°F (205°C)	0.9%	7.0%	____[4]
9250 (MIL-L-9000)	380°F-390F (193°C-199°C)	____[3]	____[3]	____
Methane[5]	gas[1]	5.0%	15.0%	999°F (537°C)
Methyl Alcohol	52°F (11°C)	6.7%	36%	725°F (385°C)
Methyl Ethyl Ketone	16°F (-9°C)	1.4%	11.4%	759°F (404°C)
Propane	gas[1]	2.1%	9.5%	842% (450°C)
Torpedo Otto Fuel II	265°F (129°C)	____[3]	____[3]	____

[1] Flammable gases do not list flashpoints since they can be ignited at any temperature.
[2] Explosive limits of Fuel, Navy Distillate (F-76) are similar to those of JP-5.
[3] Data for LEL and UEL not available.
[4] Data unavailable.
[5] Methane exists in and around the CHT and VCHT systems.
[6] Cooking oil flashpoint and ignition temperatures vary with origin of oil, brand, age, and contaminants.

The range between the lower and upper explosive limits is called the explosive range of the gas (or vapor).

Table 7-1 shows the flashpoint, LEL, UEL, and ignition temperature for a few of the flammable materials carried aboard ship. As an example, a mixture of 10% gasoline vapor and 90% air will not ignite, because the mixture is too rich (above the UEL). In this case a large amount of air must mix with a small amount of vapor to form an ignitable mixture.

Fire Growth

There are four distinct stages in the growth of a fire within a compartment of a ship (fig. 7-1). These stages are known as growth, flashover, fully-developed fire, and decay.

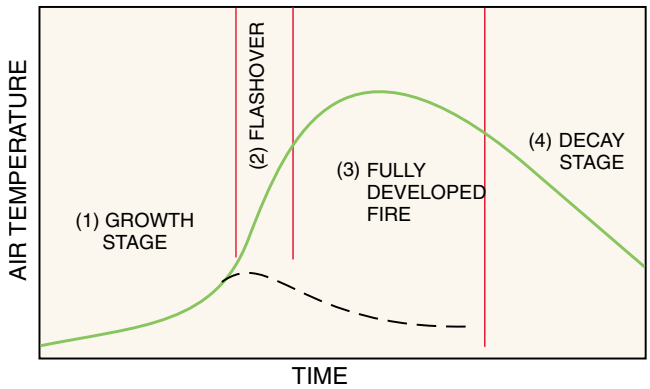

Figure 7-1. Stages of compartment fire growth.

During the growth stage of a fire (fig. 7-2), the average space temperature is low and the fire is localized near the area where it started. It is hot in the immediate vicinity of the fire, and rising heat and smoke create a hot upper level in the compartment.

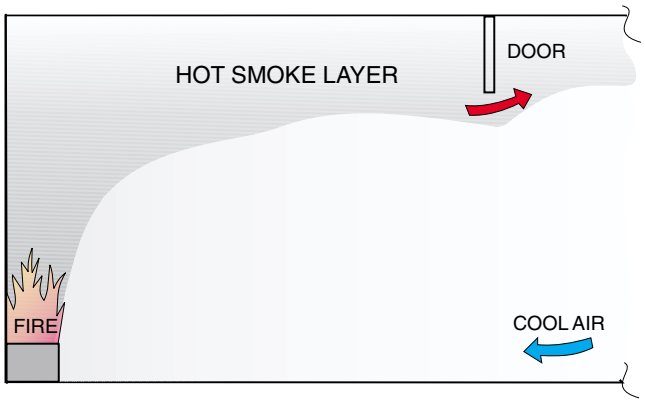

Figure 7-2. Growth stage of a compartment fire.

In what is called the "rollover" of a compartment fire, a flame front of burning gases is formed across the overhead of the space. Rollover takes place in the growth stage when unburned combustible gases from the fire mix with fresh air in the overhead and begin burning at some distance from the fire. Rollover differs from flashover in that only gases are burning in the space.

The flashover stage is the period of transition from the growth stage to the fully-developed fire stage. It occurs in a short period of time and may be considered an event, much as ignition is an event in a fire. It normally occurs at the time the temperature of the upper smoke layer reaches 1100°F (600°C). The most obvious characteristic of flashover is the sudden spreading of flame to all remaining combustibles in the space. Personnel still in the compartment when flashover occurs are not likely to survive.

In the fully-developed fire stage all flammable materials in the compartment have reached their ignition temperature and are burning. The rate of combustion will normally be limited by the amount of oxygen available in the air to provide combustion. Flames may emerge from any opening; hatches, open ventilation ducting, etc. Unburned fuel vapor in the smoke may flash when it meets fresh air in adjacent compartments. There may be structural damage to bulkheads or decks when exposed to these extreme temperatures. A compartment may reach the fully-developed fire stage very quickly during machinery space flammable-liquid fires or during enemy weapon-induced fires.

As the available fuels and combustibles in the space are consumed the fire begins to decay. In the decay stage, combustion slows down (decays) and finally the fire goes out.

There are significant exposure thresholds for human tolerance to heat as shown in table 7-2, along with other temperature characteristics that may help you put them in perspective.

If a fire goes out quickly due to a lack of oxygen, such as in a tightly sealed compartment, fuel vapors may still be formed from any flammable liquid that is heated above its flashpoint. If fresh air is allowed into the space before this fuel vapor cools below its flashpoint, this mixture can ignite explosively. This is known as backdraft, and fortunately, is an unusual occurrence.

Fire Spread

If space personnel attack a fire early and efficiently, it can be confined to the area in which it started. If the fire continues to burn unchecked, it can generate great amounts of heat that will travel away from the fire area, starting more fires wherever fuel and oxygen are available. Steel bulkheads and decks and other fire barriers can delay but not prevent heat transfer.

When a fully-developed fire exists in a compartment, the fire is most quickly spread to other compartments through openings such as doorways, vent ducts, and unsealed cableways. It will also spread to adjacent compartments by heat conduction through the bulkheads. Fires normally spread faster upward to the space above than to adjacent horizontal spaces simply because heat rises.

Tests have been developed to provide typical temperatures, radiant heat flux, and length of time for material ignition by conduction through steel bulkheads from a fully-developed fire. The compartments tested were 8-foot x 8-foot x 8-foot steel cubes with bare metal surfaces. These typical values shown will differ based on the space that the fire is in, due to factors such as bulkhead insulation, compartment dimensions, ventilation, specific material characteristics, and water application and cooling. These figures, as shown in table 7-2, are provided to show you the characteristics of conduction, and should be of particular interest to your boundarymen.

Table 7-2. Significant Exposure Thresholds

IGNITION THRESHOLDS (PILOTLESS IGNITION WITHIN 30 SECONDS)			
Material	**Hot Air (Oven Effect)**	**Hot Metal Contact (Frying Pan Effect)**	**Radiant Heat Flux**
Paper	450°F (230°C)	480°F (250°C)	20 kW/m^2
Cloth	480°F (250°C)	570°F (300°C)	35 kW/m^2
Wood	570°F (300°C)	660°F (350°C)	40 kW/m^2
Cables	700°F (370°C)	840°F (450°C)	60 kW/m^2

IGNITION OF PAPER VIA RADIANT HEAT	
Radiant Heat Flux	**Time to Ignition**
20 kW/m^2	25 seconds
25 kW/m^2	14 seconds
35 kW/m^2	8 seconds
50 kW/m^2	3.5 seconds
75 kW/m^2	2.5 seconds

HUMAN TOLERANCE TO HEAT	
Hot Air Exposure	
200°F (90°C)	Incapacitation 35 minutes, death 60 minutes
300°F (150°C)	Incapacitation 5 minutes, death 30 minutes
380°F (190°C)	Immediate Incapacitation, death 15 minutes
400°F (200°C)	Irreversible respiratory tract damage
650°F (340°C)	Death
Radiant Heat Exposure	
1 kW/m^2	Noon sun radiation on clear sunny day
5 kW/m^2	Pain Threshold for exposed skin
10 kW/m^2	Immediate blistering

ELECTRONICS HEAT THRESHOLDS	
Thermal Effects on Electronics	
120°F (50°C)	Computers develop faults
300°F (150°C)	Permanent computer damage
480°F (250°C)	Data transmission cables fail

Fire may spread through bulkhead penetrations such as electrical cableway openings. Although these openings are sealed, experience has shown that even armored cables will burn from extreme heat. Cableway fires may be hard to extinguish because they are difficult to cool because the grouping of multiple cables traps and contains heat. Also, cableways are often run through the overhead of compartments, and heavy smoke hinders finding the source of the fire. Older-style electrical cables will generate toxic black smoke from their insulation. Newer cables in use aboard ship are designed to reduce the amount of smoke generated.

REVIEW QUESTIONS

Q1. What chemical action is defined as a chemical decomposition due to the application of heat?

1. Oxidation
2. Reduction
3. Pyrolysis
4. Combustion

Q2. The lowest temperature at which a liquid gives off sufficient vapor to form an ignitable mixture is known by what term?

1. Pyrolysis
2. Upper explosive limit
3. Lower explosive limit
4. Flashpoint

Q3. The formation of burning gases in the overhead of a compartment is known by what term?

1. Flashover
2. Rollover
3. Backdraft
4. Decay

Q4. The lower explosive limit (LEL) for a gas is the lowest percentage of that particular gas in an air-gas mixture that forms an ignitable mixture.

1. True
2. False

Q5. There are a total of how many distinct stages in the growth of a fire within a compartment?

1. One
2. Two
3. Three
4. Four

ATTACK TEAM CONSIDERATIONS

Learning Objectives: Recall the duties and responsibilities of an attack team while responding to a fire and the use of specific fire-fighting equipment.

During the initial stages of a fire, the fire marshal proceeds directly to the scene to direct efforts of the rapid response team. If a fire is beyond the capabilities of the rapid response team, the fire marshal shall turn his duties over to the scene leader of the at-sea fire party in order to coordinate this larger threat. These duties may include the following:

- Overall command of the at-sea fire party
- Supervising the establishment and maintenance of communications
- Setting boundaries

Providing necessary support to the at-sea fire party. The fire marshal assumes a "big picture" role, paying particular attention to the possibility of fire spread. He will also make recommendations for additional personnel or for the setting of general quarters (GQ) as required by the size of the fire.

GENERAL QUARTERS (GQ)

During general quarters (GQ), the ship has its maximum capability to withstand and recover from damage. Many ships routinely set GQ upon notification of a fire; others wait until after an initial estimation of the fire size and severity is received.

During GQ the crew dons battle dress. This action consists of fully buttoning up all worn clothing, tucking trouser legs into socks, and wearing anti-flash hood and gloves. The anti-flash hood simply pulls over your head and hangs down over the outside of your shirt. If your ship provides the older beige-colored style anti-flash hoods, you may wear two of them for additional protection. A new, single thickness fire-fighter's hood is being supplied to replace the older hoods. You will recognize it by its gold color, similar to that of the fire-fighter's ensemble. It is more durable, longer in length, offers more protection, and has a larger face opening to accommodate the oxygen breathing apparatus (OBA) or self-contained breathing apparatus (SCBA).

While manning GQ, personnel should have their MCU-2P mask and a life preserver with them. They are carried ready for use, using the waist straps provided. While individual workcenters are responsible for the repair, maintenance, and testing of these devices, Damage Controlman personnel are responsible for life preservers stowed in repair lockers.

IN-PORT ACTIVITIES

In-port duty sections are set up not only to man the required watchstanders needed while pierside, but also to ensure that an in-port fire party can be properly manned. Depending upon the number of personnel assigned, some people may be required to perform multiple functions. When at sea, during GQ Condition 1, a particular fire party may request assistance from a different repair locker if needed. In port however, this option may not be available. However, the repair party may request assistance from other members of the duty section, other ships pierside, or the base fire department.

REPAIR PARTIES

A repair party is a part of the damage control organization as specified in NWP 3-20.31. A damage control repair station is an area designated as a locker. It contains damage control equipment, including fire-fighting equipment, and serves as the control location for a particular repair party. When at GQ, respective repair party members will man all damage control repair stations, and each repair party will be organized to provide one fire party. During conditions other than GQ, the fire party will typically go to the damage control repair station nearest the fire and use the equipment located there. The number of repair parties aboard a ship depends on the size and configuration of the ship. Some ships will split a repair party into multiple locations to better respond to the ship's configuration.

TYPE OF ATTACK

Many factors go into the decision-making process to size up a fire, and information is vital. The location, type, and size of the fire, available resources (including personnel), and fire growth all determine the overall plan of attack. Reports from the scene will include (1) location of fire, (2) class of fire, (3) action taken to isolate and combat the fire, (4) fire contained, (5) fire out, (6) reflash watch set, (7) fire overhauled, (8) compartment ventilated (9) compartment tested for oxygen, (10) compartment tested for flammable gases, and (11) compartment tested for toxic gases. If a chemical, biological, and radiological (CBR) threat exists, reports should include any CBR contamination and condition of CBR boundaries.

Much of the initial information about a fire will come from evacuating watchstanders. Space personnel will evacuate when they are endangered, or the fire goes out of control. Every attempt must be made to account for all space personnel, since they may not all evacuate through the same exit. All evacuees will muster at a pre-arranged location outside of designated smoke and fire boundaries. Missing personnel must be reported to damage control central (DCC). Use of bilge sprinkling and Halon activation (if installed) is documented, including time of activation.

Other information may come from boundarymen or investigators. A boundaryman is responsible for observing a particular bulkhead or deck for signs of heat, such as smoldering or blistering paint, or smoke (particularly through bulkhead or deck penetrations). The boundaryman will attempt to cool the bulkhead to prevent spread of the fire as necessary. The investigators travel prearranged routes ensuring that fire and smoke boundaries are set, checking for Halon effectiveness, and making ongoing reports to their associated repair locker. When smoke is encountered, the investigators will immediately report it and don their OBAs prior to further investigation. Various circuits are available for the investigators to use to make reports, and many ships have hand-held radios for damage control use.

Use of EEBD

During a fire, smoke and a variety of toxic gases will be produced, and personnel responding to initial reports of the fire must also be aware of any hazardous materials stored within the compartment. Throughout the ship, emergency escape breathing devices (EEBDs) are stored in marked locations in most compartments. These are used to provide a limited amount of breathable oxygen to evacuating personnel, and are not used to combat a fire. In manned engineering spaces, the watchstanders there will initially combat the fire. As more personnel arrive to assist, EEBDs should be passed out to all personnel within the space. The EEBD should be carried over the shoulder by the strap attached to the carrying case. Some newer-style EEBDs are worn on your belt, and have different donning procedures. These will be maintained by the damage control petty officer, and should be inspected in accordance with the planned maintenance system (PMS). EEBDs are one-time use devices, and are disposed of after they have been used. If a CBR threat exists, personnel evacuating the compartment will exchange their EEBD for the MCU-2P once they have reached a smoke-free area.

In engineering spaces, the watchstanders carry Supplementary Emergency Egress Devices, known as SEEDs. These pressurized cylinders are much more limited in their air supply, and provide breathable air long enough to reach an EEBD. Because smoke and toxic gases may have filled the passageways along your escape route, the EEBD is preferred for evacuation purposes. Many ships are now receiving recharging equipment for the SEEDs; in the past, the SEEDs had to be sent off the ship for recharging.

The newer-style compressed-oxygen EEBDs (Ocenco M-20.2), shown in figure 7-3, are currently replacing the Scott EEBDs. These can be worn on your belt and also can be mounted in a stationary bracket in any space, as shown in figure 7-4. The new EEBDs have a service life of 15 years.

Courtesy of Ocenco, Inc.

Figure 7-3. The Ocenco M-20.2 EEBD has been selected for exclusive use by the U.S. Navy, U.S. Coast Guard and the Hellenic Navy.

Courtesy of Ocenco, Inc.

Figure 7-4. The Ocenco M20.2 shown donned and ready for escape.

The new compressed-oxygen EEBD has different donning procedures because of their new design. The new EEBD provides 10 minutes of oxygen for escape, although it is rated up to 32 minutes. It uses an automatic on, compressed oxygen, demand regulated system. The new EEBD can be donned in seconds; simply unlatch the case, pull out the unit, and insert the mouthpiece and don the nose clip. The attached hood can be donned at anytime needed during emergency egress. The hood protects the user from hazardous environments, while allowing a full range of view. The Teflon hood and breathing bag provide excellent heat and chemical resistance. The compressed oxygen and mouthpiece combination allows the Ocenco M-20.2 EEBD to be donned in a smoke-filled environment. The actual EEBD can be identified by its orange storage case. The training EEBD comes with two extra mouthpieces and is stored in a light blue secondary container. It provides training in both the worn and stored positions.

Affected/Damaged Systems

The information necessary to effectively combat a large fire must include an assessment of any damage to fire-fighting systems, as well as any major systems within the compartment that are not isolated and electrical isolation. The decision to secure compartment lighting rests with the on-scene leader.

Fire and Smoke Boundaries

Fire and smoke boundaries are determined for each of the large engineering spaces aboard your ship. The ship's fire doctrine lists both primary and secondary boundaries. The boundaries are designed to effectively contain a fire to prevent its spread.

Primary fire and smoke boundaries are set at all bulkheads immediately adjacent to the fire. Boundarymen will man these primary boundaries with a fire hose, and may have to cool the bulkhead to prevent spread of the fire. Fire could spread through any penetration, including ventilation, electrical cableways, piping conduits, or defective welds in cases of extreme heat.

A secondary set of boundaries is set at the next immediate watertight bulkhead from the scene. If a boundary fails, and the fire cannot be contained at the first boundary, the boundaryman will attempt to secure the space and evacuate. What were previously secondary boundaries now become the primary boundaries. Boundary information is plotted by DCC and all repair lockers.

Reports (Halon, Bilge Sprinkling, etc.)

Reports by evacuating personnel will include whether bilge sprinkling was used, whether the source of the fire (such as leaking or spraying fuel) was secured, and whether Halon was activated.

Investigators will attempt to determine whether Halon was effective by observing the color of smoke inside the space through the battle ports at the escape trunk. Smoke color may also be observed from topside, if the space is not completely air-tight, and reported to DCC. These reports help make the determination whether to immediately re-enter to combat the fire, or if it is already out, to allow the space to cool prior to entry.

PREPARING TO ENTER THE SPACE

If you are a scene leader, your primary source of information is your locker leader. The locker leader maintains plots of all damage control information throughout the ship, and will pass along all pertinent information to the scene leader. You are responsible for briefing your personnel and giving them the necessary information, so they will be better prepared to deal with conditions inside the compartment. Figure 7-5 shows an attack team preparing to enter a compartment.

Briefing Hose Teams

Some of the information that hose teams must be briefed on are as follows: (1) status of the fire to include location, type of fire (and is it still burning), was Halon effective; (2) status of the compartment: extent of major damage, equipment status, mechanical isolation, electrical isolation, boundaries); (3) watchstanders not accounted for; (4) activation of bilge sprinkling; and (5) planned method of attack.

The ship's main space fire doctrine provides a basic checklist for various personnel actions (including the damage control assistant, locker and scene leaders, and team leader), and is tailored to your ship. Other information may be important as well, depending upon your ship's configuration or additional casualties to the ship or systems.

Figure 7-5. Attack team lighting off OBA and preparing for compartment reentry.

Dressing Out

You and other attack team personnel will assist each other as necessary while donning personal protective equipment. You must ensure that your shipmate is properly dressed out. Personal protective equipment is intended to fit slightly loosely, especially gloves. This ensures that your skin has room to move somewhat inside this clothing. It also helps to keep hotter areas of the clothing from remaining in constant contact with your skin. This practice also reduces the likelihood of heat stress by allowing some air movement within the confines of the fire-fighter's ensemble (FFE).

Checking Equipment

When donning an OBA or SCBA, you should examine it and ensure it has not been damaged while in storage. Your OBA canister should not show any sign of damage, which may prevent you from properly inserting or removing it. The copper foil seal must be in place. If the canister is not in good shape, replace it with a new one before entering the space.

NFTI.—If the naval fire-fighter's thermal imager (NFTI) will be used, it must be warmed up in accordance with the manufacturer's technical manual. Because it is very fragile, only qualified personnel will handle the NFTI. Most team leaders carry a spare battery for the NFTI. Helmet lights, handheld radios, voice amplifiers, and handheld firefinders are among the equipment that should be checked prior to re-entry. Damage Controlmen maintain and test this equipment in accordance with PMS or with the manufacturer's instruction.

The NFTI is a device that allows the user to see through dense smoke and light steam by sensing the difference in infrared radiation given off by objects with a temperature difference of at least 4 degrees Fahrenheit. A small television-type monitor is built into the back of the NFTI, and displays these variations in temperature as a black and white image. Hotter objects will appear lighter on the screen than cooler objects. The NFTI has multiple uses, including locating the seat of a fire, locating injured personnel, and searching for hangfires and hotspots.

The NFTI is battery-operated and displays five light emitting diodes (LEDs) when fully charged. A good practice is to change the battery when more than one light goes out during use. To conserve battery power, turn the NFTI off when not in use, and allow 1 minute for warmup prior to use.

The NTFI has two modes of operation; pan and chop. The pan mode provides the greater sensitivity; however, the NFTI must be kept in motion or the image will fade out. The chop mode is best for fire fighting, allowing the user to focus on one area while holding the NFTI still. A blue button on the front of the NFTI allows you to change modes. Prior to compartment entry, you must ensure the NFTI is in the chop mode.

When using the NFTI, it has been proven that slow, steady advancement, along with periodic scanning of the scene during an approach, helps the operator judge distances better. A side-to-side scan also provides important information on hazards in the area and the best direction in which to proceed. An occasional vertical scan will detect hazards above deck level, i.e. cableway or overhead fires.

FIRE-FIGHTERS ENSEMBLE (FFE).—The fire-fighter's ensemble (FFE) consists of fire-fighter's coveralls, fire-fighter's hood, damage control/fire-fighter's helmet, fire-fighter's gloves, and fireman's boots, all designed to protect the fire fighter from the heat generated by a growing (pre-flashover) fire. For a flashover or fully-developed fire, the FFE provides only a few seconds of protection for escape. The fire-fighter's glove size should be selected for a loose hand and finger fit to reduce heat transfer from continuous material contact and allow glove adjustment at hot points. Additional hand protection can be gained by wearing a flash glove as an extra inner liner to an over-sized fire-fighter's glove. While waiting to enter the fire area, the FFE coveralls should only be donned to the waist, tying the coverall arms around the waist.

Accessing the Space

Proper fire boundaries must be set prior to accessing the affected compartment, to provide a safe area from which fire fighters can attack the fire. Electrical isolation must be complete prior to re-entry; the only exception is lighting. The on-scene leader will decide whether to secure compartment lighting. Complete electrical isolation helps to decrease the number of ignition sources inside the compartment. Mechanical isolation does not have to be complete prior to re-entry; however, it does provide greater safety for firefighters.

Prior to space re-entry, there may be evidence that Halon and bilge sprinkling was not effective. If secondary Halon is available it should be used, and

observed for effectiveness. Activate AFFF bilge sprinkling for 2 minutes prior to entry. If Halon was effective, allow at least 15 minutes prior to space entry. If Halon was not effective, re-entry should be attempted as soon as evacuation and mechanical isolation are completed.

Direct Attack

The type of attack is determined from all information received. A direct attack upon a fire involves entering the compartment, proceeding to the seat of the fire, and attacking it "directly." Other direct attacks involve a fog attack into the overhead gases, or a direct attack upon the base of the fire from the compartment entrance. The accessman opens the hatch or door so that fire fighters can enter the compartment. If a fire has burned for a considerable time, the access hatch to the compartment may be jammed. It may be necessary to use forcible entry equipment, including bolt cutters, sledge hammers, pry bars, PHARS, and PECU.

Indirect Attack

An indirect attack is used when conditions do not allow fire fighters to enter the space. A fog spray is introduced from a cracked doorway or any available penetration. Upon completion, fire fighters will then enter the compartment and attack the fire directly. Compartment venting is another means of cooling the space so fire fighters may enter safely. An opening leading directly to an open weather deck area (or a large open compartment leading directly outside) allows the hot gases overhead to vent. It may be desirable to cut a hole in the overhead leading outside. This hole should be at least 1 square foot in diameter to allow proper venting. Prior to entry, bilge sprinkling (if installed) will be activated for 2 minutes.

Loss of Personnel

Your training prepares you to take on different positions on an attack team, or in the fire party. A personnel casualty requires you to find a replacement for that person. Battle damage may prevent a member of the fire party from reaching his or her GQ station. The key element is training, enabling personnel to perform a variety of functions in the fire party.

REVIEW QUESTIONS

Q6. During the initial stages of a fire, what person proceeds directly to the scene to direct efforts of the rapid response team?

1. Officer of the deck
2. Damage control assistant
3. Fire marshal
4. Repair party leader

Q7. During general quarters (GQ), a ship has its maximum capability to withstand damage. For this reason, many ships routinely set GQ upon notification of a fire.

1. True
2. False

Q8. EEBDs should be cleaned and stored immediately after they are used.

1. True
2. False

Q9. The new EEBD provides a maximum of how many minutes of oxygen for escape purposes?

1. 18
2. 15
3. 12
4. 10

Q10. The locker leader maintains plots of all damage control information throughout the ship, and will pass along all pertinent information to the scene leader.

1. True
2. False

Q11. Personal protective equipment is intended to fit slightly loosely, especially gloves.

1. True
2. False

Q12. What device allows the user to see through dense smoke and light steam by sensing the difference in infrared radiation given off by objects?

1. EEBD
2. PHARS
3. NFTI
4. PECU

Q13. Proper fire boundaries must be set prior to accessing the affected compartment, to provide a safe area from which fire fighters can attack the fire.

1. True
2. Fa1se

FIRE ATTACK AND HOSE HANDLING

Learning Objective: Recall various methods available to coordinate movements of hose teams to combat a fire effectively.

When inside a compartment that is on fire, the attack team leader coordinates the movements of the attack team. The leader passes and receives information by means of the personnel manning the hose, who relay the message to the next person on the hose.

HOSE TEAM MOVEMENTS

The first obstacle for a hose team member is often a ladder leading downward. For safety, only one person should be on the ladder at a time. As the nozzleman advances, the hose team members pass the hose down to him while he descends the ladder. After he reaches the deck, the first hoseman will descend the ladder, followed by another hoseman, as needed to handle the hose. As the hose progresses further into the space, more hose is needed, as well as hosemen.

The attack team leader usually operates the NFTI, looking for hotspots and hangfires. Although the team leader already knows the location of the seat of the fire, he must be alert to the likelihood that other parts of the compartment are on fire. The leader must also look for obstructions that prevent advancing to the seat of the fire. The team leader will also issue orders for hose advancement, and instructs the nozzleman to attack the fire with the necessary spray pattern.

Hosemen follow the direction of the team leader, moving forward on the hose, advancing or backing up with the hose, and handling the weight of the hose. Whenever the nozzle is opened, a recoil effect pushes the hose backwards, and hosemen will push forward to compensate for this.

Heat Stress

Extreme compartment heat, weight of the FFE, carrying heavy equipment, and handling a fire hose are contributing factors to heat stress. As fire fighters rotate out of the compartment, the team leader and scene leader will coordinate relief personnel. Under harsh conditions, personnel working hard (such as the nozzleman) will need to leave the compartment sooner than others. A complete relief team should be standing by, ready to enter as needed, to relieve personnel in the space.

Heat stress training is conducted as part of “all hands” training, and you must be aware of its symptoms and required treatment. The symptoms of heat stress are as follows:

- The skin appears ashy gray; the skin is moist and clammy
- The pupils of the eyes may be dilated (enlarged)
- Vital signs are normal; but the victim may have a weak pulse and rapid shallow breathing
- Heavy sweating

You may observe these symptoms in one of your shipmates after leaving the compartment. The treatment for heat stress is as follows:

- Loosen clothing; apply cool wet cloths
- Move the victim to a cool or air-conditioned space, and fan the victim
- Do not allow the victim to become chilled
- If the victim is conscious, provide a solution of 1 teaspoon of salt dissolved in a quart of water.
- If vomiting occurs, do not give any more fluids

Transport the victim to sickbay (if manned) or the nearest battle dressing station for treatment by corpsmen

Heat Stroke

The sympthoms of heat stroke are as follows:

- High body temperature

- No sweating—skin is hot and dry
- Pupils of the eyes may become constricted
- Strong rapid pulse
- Possible unconsciousness

During heatstroke, the body is no longer able to sweat, preventing removal of excess heat. If the internal temperature of the body rises above 105°, the brain, kidneys, and liver may all suffer permanent damage. In its earlier stages, the victim may have shown symptoms of heat exhaustion, as detailed above. The treatment of heat stroke may include:

- Immediately informing medical personnel, moving the victim to the coolest possible area, and removing clothing.
- Reduce body temperature immediately by dousing the body with cold water or by applying cold, wet towels to the body.
- Ensure the victim has an open airway.
- Place victim on his or her back, head and shoulders slightly raised.
- If cold packs are available, place them under the arms, around the neck, at the ankles, and on the groin. This helps lower internal body temperature.
- Give the victim cool water to drink. Do not give any hot drinks or stimulants.

ATTACKING A FIRE

There are different methods for attacking a fire; however, no single tactic or strategy is applicable to every situation. For example, in a multiple hose attack, it is possible to drive smoke and flames away from one hose team onto another team. Therefore, all attacks must be coordinated.

One of the dangers of opening an access to a compartment is that fresh oxygen is introduced into the space. If space temperatures are above the auto-ignition point of any combustible materials, they may start burning again once fresh air reaches them. This is the reason for allowing a cooldown period, assuming that Halon was used and was effective.

Direct Attack

The ideal method of attacking a fire is a direct attack. This technique involves short bursts with a narrow fog or direct stream, as directed by the team leader. Fire fighters advance into the immediate fire area and apply AFFF directly onto the fire.

Locating the Seat of a Fire

All members of the fire party have been briefed regarding the location of the fire from information received from space evacuees. Finding the seat of the fire probably will not be too difficult; reaching it may be another matter. In extreme temperature conditions, deckplates may warp, or ladders may fail. Move throughout the compartment with extreme caution.

Extinguishment

Once the team leader and nozzleman have successfully reached the seat of the fire, the team leader directs the nozzleman in foam application to extinguish any remaining fire. Different spray patterns from the hose nozzle are used as needed, either to break up any combustible material, or to cover a certain area with AFFF.

Prevention of Reflash

AFFF is particularly effective against class BRAVO fires, because it serves three distinct functions. As foam it floats on top of flammable liquids, preventing vapors from being released to the atmosphere. This foam also prevents oxygen from reaching the flammable liquid. The AFFF foam, being a mixture of concentrate and water, also provides a cooling effect. Therefore, covering hot spots with AFFF is highly effective in preventing reflash. Allowing the compartment to cool down prior to reentry (with Halon effective) also helps to prevent reflash.

Reflash Watch

Once satisfied that the original fire is extinguished, the team leader stations a reflash watch. The person assigned as reflash watch remains near the seat of the fire with a charged hose, and observes the area to ensure that no new fire breaks out. Normally at least one other hoseman remains on scene with the nozzleman to tend the hose in case a reflash occurs.

Hangfires and Overhaul

Once the reflash watch is set, the team leader and a second hose team search for hangfires. All areas of the compartment are examined with the NFTI, ensuring

that no areas are missed. All cableways, areas beneath deckplates, and overheads are examined to ensure no hangfires are missed. At various times, the team leader will make reports detailing percentage of overhaul. If hangfires are found, they are extinguished. It is sometimes necessary to use overhaul equipment to pull smoldering or burning material (such as lagging) from an overhead or bulkhead in order to extinguish it.

REVIEW QUESTIONS

Q14. Which member of the attack team controls the movement of hose teams while inside a space that is on fire?

1. On-scene leader
2. Fire marshal
3. Nozzleman
4. Attack team leader

Q15. Which of the following conditions is NOT a symptom of heat stroke?

1. No sweating with skin hot and dry
2. A weak pulse
3. Constriction of the pupils of the eyes
4. Victim is unconscious

Q16. What is the purpose of a reflash watch?

1. To overhaul the compartment
2. To ensure that no new fire breaks out
3. To extinguish hangfires
4. To maintain primary boundaries

DESMOKING AND ATMOSPHERIC TESTING

Learning Objective: Recall the procedures used once a fire is extinguished to prepare the compartment for remanning.

Once a fire is extinguished, specific actions must be taken to return the compartment or space damaged by the fire to a condition suitable for remanning. These actions include the following: desmoking, atmospheric testing, dewatering, and a thorough follow-up inspection.

DESMOKING

Active desmoking is the process of removing smoke and heat from the buffer zone prior to extinguishing a fire. This action aids fire-fighting efforts, and helps prevent the spread of smoke throughout the ship. Desmoking may be accomplished using ventilation fans in adjacent compartments or with portable fans. There will be some smoke in surrounding areas; smoke boundaries will help slow the spread of smoke. This type of desmoking should not be confused with the desmoking process of the affected compartment after the fire has been overhauled.

When a class BRAVO fire has been extinguished, combustible gases may be present. Operating electric controllers to start ventilation fans may ignite these gases. Desmoking with installed ventilation can proceed with minimal risk once specific conditions are met. These conditions include the following:

- The fire is extinguished and overhauled.
- The AFFF bilge sprinkling has been operated.
- The source of the fuel for the fire is secured.
- The space has been allowed to cool.
- All fuel has been washed to the bilges.
- No damage has been sustained to the electrical distribution system.

Desmoking should begin once the compartment has cooled sufficiently so there is no danger from reignition. Circuit breakers that have tripped should not be reset until qualified personnel can make a damage assessment. Examine the electrical distribution system, and if possible, reestablish power to the installed ventilation fans. If the fans are fully operational, run them on high speed for a minimum of 15 minutes to remove smoke and toxic gases. If the installed system is partially operational or inoperative, desmoking will take longer, but can be accomplished by using portable blowers, or by providing a positive ventilation from adjacent spaces. On ships without Halon or AFFF bilge sprinkling, the safest method of desmoking is to exhaust the compartment with portable fans, or to provide a positive ventilation pressure from adjacent compartments.

ATMOSPHERIC TESTING

Atmospheric tests are always conducted after desmoking is complete, because combustible gas indicators will not operate reliably in a Halon

atmosphere, and an oxygen analyzer is unreliable when its sensor is exposed to excess moisture or comes in contact with particulates found in a post-fire atmosphere.

When the space is clear of smoke, test the atmosphere for oxygen, combustible gases, and toxic gases. The level of oxygen must be between 19.5 and 22 percent. Combustible gases must be less than 10 percent of the lower explosive limit, and all toxic gases must be below their threshold limits before the space is certified safe for personnel without breathing devices. After a class BRAVO fire, the compartment should be tested for the following gases:

- Hydrocarbons
- Carbon dioxide
- Carbon monoxide
- Hydrogen chloride
- Hydrogen cyanide

If Halon 1301 was discharged into the compartment, a test for hydrogen fluoride must also be conducted. Shipboard personnel authorized to conduct these tests aboard ship are the gas free engineer and gas free petty officers. Required tests shall be conducted near the center and at all four corners, on each level of the compartment. At least one satisfactory reading at each location must be obtained.

Specific information regarding testing procedures and equipment is found in *Naval Ships' Technical Manual* (*NSTM*), chapter 074,volume 3, "Gas Free Engineering." If the compartment has been exposed to a CBR environment, decontamination procedures detailed in *NSTM*, chapter 470, "Shipboard BW/CW Defense and Countermeasures" must be followed.

DEWATERING

Dewater the compartment with the commanding officer's permission, and in accordance with operating procedures. Dewatering a class BRAVO pool fire will not commence until the space is completely overhauled, except in extreme conditions where ship stability is threatened. Dewatering will affect the vapor barrier on top of pooled flammable liquid, an extreme caution must be exercised to ensure the AFFF blanket is maintained until completion of overhaul. Following overhaul, normal dewatering may be conducted or completed at the same time as desmoking or post-fire gas free testing.

COMPARTMENT REMANNING

Once the space is certified safe, remanning can begin. A careful damage assessment is conducted, and once individual equipment or systems are verified operational and safe, then may be placed in service.

INVESTIGATION

After overhaul, the fire should be investigated to determine the point of origin, types of combustibles involved, path of fire spread, ignition source, and significant events in the growth and eventual extinguishment of the fire. Starting from the point of farthest fire spread, burn patterns will usually extend back to the area of origin. Efforts should be directed toward recreating the conditions that caused the fire, and identifying any changes in design or procedures that could have prevented the fire or lessened its spread and intensity. These changes are very helpful to ship designers and operators. Photographs, material samples, metallurgical samples, and failed equipment assist in reconstructing a fire history. If there is a major fire which involves significant damage or loss of life, a NAVSEA technical expertise team is available to investigate such fires, and to develop lessons learned from a ship design and a material standpoint.

REVIEW QUESTIONS

Q17. What percentage(s) of oxygen must be present when conducting post-fire atmospheric testing of a compartment?

1. Less than 10 percent
2. 19.5 to 22 percent
3. 30 to 33 percent
4. 40 to 42.5 percent

Q18. Halon 1301 was discharged into the compartment to extinguish a fire. This requires a test be conducted for which of the following types of gas?

1. Hydrogen sulfide
2. Carbon monoxide
3. Hydrogen flouride
4. Hydrogen bromide

SUMMARY

This chapter provides information pertaining to the tactics and strategies involved in fire fighting. Although every fire is different, certain practices apply to all fires. More detailed information on combating different types of fires is found in *NSTM*, chapter 555, volume 1, and *NATOPS U.S. Navy Aircraft and Rescue Manual*, NAVAIR 00-80R-14. While the information is located in these volumes, there is no substitute for actual hands-on training. As you become proficient as a Damage Controlman, you will train your shipmates in fire fighting, as well as other aspects of damage control. A properly trained in-port fire party or attack team may make the difference between dealing with a small easily controlled fire, and one that threatens the entire ship.

REVIEW ANSWERS

A1. What chemical action is defined as a chemical decomposition due to the application of heat? **(3) Pyrolysis**

A2. The lowest temperature at which a liquid gives off sufficient vapor to form an ignitable mixture is known by what term? **(4) Flashpoint**

A3. The formation of burning gases in the overhead of a compartment is known by what term? **(2) Rollover**

A4. The lower explosive limit (LEL) for a gas is the lowest percentage of that particular gas in an air-gas mixture that forms an ignitable mixture. **(1) True**

A5. There are a total of how many distinct stages in the growth of a fire within a compartment? **(4) Four**

A6. During the initial stages of a fire, what person proceeds directly to the scene to direct efforts of the rapid response team. **(3) Fire marshal**

A7. During general quarters (GQ), a ship has its maximum capability to withstand damage. For this reason, many ships routinely set GQ upon notification of a fire. **(1) True**

A8. EEBDs should be cleaned and stored after use. **(2) False. EEBDs are a one-time use device, and are disposed of after they have been used.**

A9. The new EEBD provides a maximum of how many minutes of oxygen for escape purposes? **(4) 10**

A10. The locker leader maintains plots of all damage control information throughout the ship, and will pass along all pertinent information to the scene leader. **(1) True**

A11. Personal protective equipment is intended to fit slightly loosely, especially gloves. **(1) True**

A12. What device allows the user to see through dense smoke and light steam by sensing the difference in infrared radiation given off by objects? **(3) NFTI**

A13. Proper fire boundaries must be set prior to accessing the affected compartment to provide a safe area from which fire fighters can attack the fire. **(1) True**

A14. Which member of the attack team controls the movement of hose teams while inside a space that is on fire? **(4) Attack team leader**

A15. Which of the following conditions is NOT a symptom of heat stroke? **(2) A weak pulse. A strong rapid pulse is symptomatic of a heat stroke.**

A16. What is the purpose of a reflash watch? **(2) To ensure no new fire breaks out.**

A17. What percentage of oxygen must be present when conducting post-fire atmospheric testing of a compartment? **(2) Between 19.5 to 22 percent**

A18. Halon 1301 was discharged into the compartment to extinguish a fire. This requires a test be conducted for which of the following types of gas? **(3) Hydrogen fluoride**

CHAPTER 8

BATTLE DAMAGE REPAIR

Learning Objective: Recall the requirements and procedures for conducting battle damage analysis and repair.

To repair battle damage, you must possess extensive knowledge of the available damage control equipment and materials. At the same time, you must be able to expeditiously analyze and determine the appropriate corrective actions needed.

Should your ship sustain a damaging hit, the damage must be investigated immediately. Precise reports from investigators that are forwarded in an expeditious manner are critical. These reports allow key damage control personnel to form a concise picture as to the extent of the damage. This process results in a determination of what actions are required to localize and overcome the casualty.

DAMAGE CONTROL EQUIPMENT AND MATERIALS

Learning Objective: Identify the various types of damage control equipment and material and recall the maintenance and inventory requirements for each.

The equipment and materials required to make repairs to battle damage vary according to the nature of the damage. Since several types of damage can occur aboard ship, you must know how to use a wide variety of equipment and materials. The Allowance Equipage List has several repair locker inventory lists for various types of ships. A typical repair locker will usually contain some or most of the following equipment, depending upon the ship's allowance:

18 oxygen breathing apparatus (OBA). Twelve canisters for each OBA and six held in reserve

- Fire-fighter's protective gloves
- Flashlights
- Sealed-beam lights
- Battle lanterns
- Extension lights
- Sounding tapes
- Helmets
- Life jackets
- Hand tools
- Electrical tools
- Chain hoist
- Screw and hydraulic jacks
- Manila line
- Forcible entry tools
- X40J cable and jack boxes
- Oxygen indicator
- Combustible gas indicator (explosimeter)
- Four gas analyzers
- Supplied air respirator with self-contained breathing apparatus (SAR/SCBA)
- Portable Exothermic Cutting Unit (PECU)
- Electrical kits
- Rubber boots
- Rubber gloves
- Spare electrical cable
- Steel wedges
- Hose and pipe flanges
- Shoring kit and shoring batten
- Plugging kit
- Pipe-patching kit (soft patches)
- Blower sleeves
- Prefabricated patches (wood and steel)
- Sound-powered phones
- Basket strainer
- Submersible pump
- Gas masks
- Chemical, Biological, and Radiological (CBR) defense protective clothing
- CBR defense detection equipment and markers

- Decontamination equipment
- Fire rakes and ladders
- Nozzles and extra fire hose
- In-line foam eductor

NOTE

On ships that have subgroups, some of this equipment is stowed in the unit lockers.

Additional damage control equipment is dispersed throughout the ship in designated areas. This equipment includes the following:

- Portable gasoline-driven fire pumps (P 100 FIRE PUMP) and hoses
- Fire hose
- Nozzles
- Applicators
- Aqueous film-forming foam (AFFF) cans
- CO_2 extinguishers
- Dry-chemical extinguishers
- Portable blowers
- Submersible pumps
- Eductors
- Shoring kit
- Shoring materials
- Plate patches
- Battle lanterns
- Casualty power cables

RELIABILITY OF DAMAGE CONTROL EQUIPMENT

The damage control organization cannot function without an adequate supply of damage control equipment. As a Damage Controlman, you will help to ensure that all damage control equipment is available and in good condition. Frequent inspections are required according to Planned Maintenance System (PMS) guidelines. These inspections ensure that all damage control equipment, tools, and materials on your ship's allowance list are actually on board. Compare the ship's allowance list with an accurate and up-to-date inventory list of onboard damage control equipment. Check to see that all damage control equipment is stowed or installed in its designated location and that it is readily accessible. Emergencies can be handled much more effectively if the equipment is available and if you do not have to waste time looking for it. The equipment assigned to each repair locker should be identified in such a way that each of the items can be returned to that repair locker after they have been used. A simple color code marking system can be used. All tools and equipment that belong to a certain repair locker should be marked with a striped band or a spot of identifying color of that repair locker.

Damage control equipment should NEVER be used for any purpose other than damage control. Damage control equipment is located throughout the ship, and some people are tempted to use it just because it is handy. This must NOT be allowed. All hands are responsible for damage control and must realize that their lives may literally depend upon the ready availability and condition of damage control equipment in an emergency.

DAMAGE CONTROL KITS

At each repair locker a number of repair kits are made up and stowed in canvas bags. These kits are kept ready to be taken to the scene of damage. The kits should be constructed and packaged so they will fit through the smallest watertight scuttle on your ship. These kits are commonly called plugging kits, pipe-patching kits, and shoring kits.

All damage control kits and repair locker equipment must be inventoried according to PMS requirements after each use. Each damage control kit should have a list of contents attached to the carrying strap. This list makes it relatively simple to inventory the contents of the kit. Any equipment or material found missing during the inventory should be replaced as soon as possible. Your ship's Coordinated Shipboard Allowance List (COSAL) shows the amount of each item that is allowed for the ship. A stencil on the outside of the bag should identify each damage control kit.

Extra plugging and pipe-patching kits are made up for the engineering spaces. These extra kits are inventoried and maintained by the personnel assigned to the engineering spaces.

PATCHING MATERIALS

A number of materials are available to plug and patch holes and to cover and secure patches. Some of

the materials commonly used for these purposes are listed below.

Plugging and Patching Materials

Plugging and patching materials include wooden plugs and wedges, wooden shoring, prefabricated wooden box patches in various sizes, rags, pillows, mattresses, blankets, kapok life jackets, metal plate, folding metal plate patches, flexible sheet metal patches, prefabricated steel box patches, bucket patches, and welded steel patches.

Securing Materials

Securing materials include assorted hook bolts, manila line, wire rope, chain, machine bolts, angle clips for welding, and shoring. Backup materials include mess tables, metal joiner doors, buckets, plywood or lumber, sheet metal, and metal plate.

Gasket Materials

Gasket materials include sheet and strip rubber, leather, canvas, rags, and oakum.

REVIEW QUESTIONS

Q1. What document provides several repair locker inventory lists for various types of ships?

1. Table of Allowance List (TOAL)
2. Allowance Equipage List (AEL)
3. Damage Control Equipment List (DCEL)
4. Master Repair Locker List (MRLL)

Q2. On a Navy ship, what personnel are responsible for damage control?

1. All hands
2. Damage control parties only
3. Damage control supervisors only
4. Damage control assistants and damage control team leaders only

Q3. After each use, all damage control kits and repair locker equipment must be inventoried to meet what requirements?

1. PQS
2. PMS
3. NAVSEA
4. OPNAV

HULL REPAIRS

Learning Objective: Recall factors that affect underwater repairs and the procedures used for plugging and patching holes in the hull of a ship.

Any rupture, break, or hole in the ship's outer hull plating, particularly below the waterline, can allow seawater to enter the ship. If flooding continues uncontrolled, the ship will sink.

When the underwater hull is pierced, there are only two possible courses of action. They are as follows:

1. Plug the holes or openings.
2. Establish and maintain flooding boundaries within the ship to prevent further progress of the flooding.

Dewatering can be effective only after these two measures have been taken.

The one very important thing to remember about flooding is that a ship can sink just as easily from a series of small and insignificant looking holes, as it can from one large and more dramatic looking hole. The natural tendency is to attack the obvious damage first and to overlook the smaller holes in the hull and in interior bulkheads. You may waste hours trying to patch large holes in already flooded compartments. Meanwhile, you disregard the smaller holes through which progressive flooding is taking place. In many cases, it would be better to concentrate on the smaller holes. As a rule, the really large holes in the underwater hull cannot be repaired until the ship is dry-docked.

All holes in the hull, large or small, should be plugged completely as soon as possible. As an interim measure, all holes should be partially plugged if they cannot be completely plugged. Even a partial plug can substantially reduce danger of sinking by dramatically reducing the amount of water entering the ship.

Holes in the hull that are at or just above the waterline should be given immediate attention. Holes in this location may not appear to be dangerous but they are. As the ship rolls or loses buoyancy, the holes become submerged and allow water to enter at a level that is dangerously high above the ship's center of gravity. These holes must be plugged at once. Give the holes at the waterline or on the low side priority (if the ship is listing), and then plug the higher holes.

The same methods and materials used to repair holes above the waterline are also used, for the most part, in the repair of underwater holes. The repair of

underwater holes tends to be more difficult. Therefore, any Damage Controlman who can repair underwater damage must certainly be able to repair similar damage above the waterline. For this reason, most of the discussion in this chapter will deal with the repair of underwater damage.

FACTORS AFFECTING UNDERWATER REPAIRS

The primary factors that make it difficult to repair underwater holes are as follows:

1. The pressure exerted by the water
2. The relative inaccessibility of the damage

The difficulties caused by water pressure are often exaggerated. Actually, a hole 7 feet below the waterline is only subjected to a water pressure of about 3 pounds per square inch.

Figure 8-1 shows the flooding effect of unplugged holes and of the same holes after inserting simple plugs. The volumes of flooding water are given in gallons per minute. The number of electric submersible pumps required to handle the flooding is also shown. It should be obvious that prompt plugging of holes is desirable. It can save the ship, it releases pumps for use elsewhere, and it saves wear and tear on the pumps that are in use. Note that the pump capacities used are considerably under the rated capacity, usually 200 gpm. However, if the pump strainers get clogged with debris, the actual capacities may be much less than the rated capacity.

The greatest difficulty in repairing underwater damage is usually the inaccessibility of the damage. If

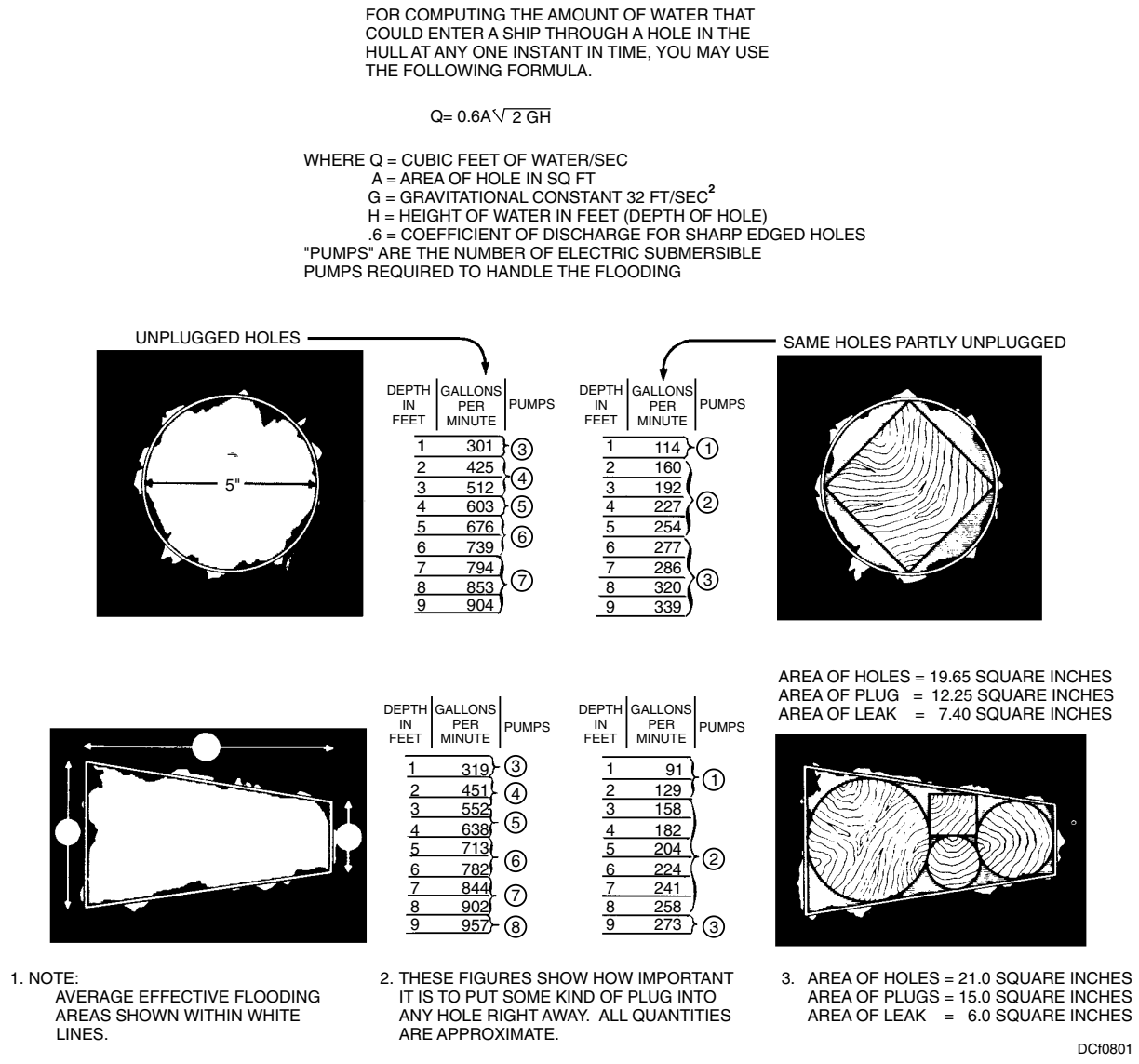

Figure 8-1. Flooding effect comparison; unplugged holes vs. partially plugged holes.

an inboard compartment is flooded, other compartments will flood if you open doors or hatches to get to the actual area of damage. The repair work may be hampered by tangled wreckage in the water, the absence of light, and the difficulties of trying to keep buoyant repair materials submerged.

PLUGGING AND PATCHING HOLES

The procedures discussed here for plugging and patching holes are intended for emergency use. They are temporary repairs that can be done to keep the ship afloat while it is in action. In most cases, they do not call for elaborate tools or equipment. They involve principles that can be applied when using wooden plugs, prefabricated patches, or other readily available materials.

The two general methods of making temporary repairs to a hole in the hull are as follows:

1. Put something in it.
2. Put something over it.

In either case, the patches will reduce the area through which water can enter the ship or through which water can pass from one compartment to another.

Plugging

The simplest method of stopping up a fairly small hole is to insert some kind of plug. Plugs made of softwood, such as yellow pine or fir, are quite effective for plugging holes up to about 3 inches by 3 inches in size. Sometimes you may use these plugs to plug larger holes as well.

The items in a plugging kit are as follows:

- A canvas bag with a carrying strap approximately 30 inches deep and 12 inches in diameter
- Softwood plugs; a minimum of 10 plugs in various sizes from 1 inch to 10 inches in diameter
- Five pounds of oakum or rags
- One hatchet
- One cold chisel
- One metal caulking iron
- Wedges made of softwood; a minimum of eight wedges, 2 inches by 4 inches and 12 inches long
- One maul or sledge
- One hammer; a minimum 2 pounds in weight
- One crosscut handsaw for cutting wood

The plugs and wedges may be used individually if they fit the hole. Often however, it is best to use a combination of conical, square-ended, and wedge-shaped plugs to make a better fit in the hole. One such combination of plugs is shown in figure 8-2.

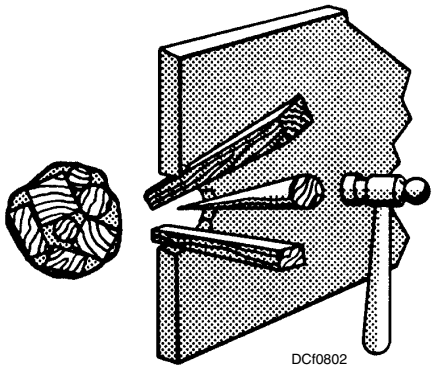

Figure 8-2. Combination of plugs used to plug a hole.

It is best to wrap each plug with lightweight cloth before inserting it. The cloth tends to keep the plugs in place and fills in some of the gaps between the plugs. In most cases, plugs will not make a watertight fit. However, you can substantially reduce the rate of leakage by using the plugs and then caulking the remaining leaks with rags, oakum, and smaller wedges. Square-ended plugs tend to hold better than conical plugs in holes located in plating that is one-fourth of an inch or less in thickness.

Most wooden plugs are inserted from the inside of the ship. When plugging a hole in this manner, you must contend with the metal edges that are protruding inward. You normally will not have this problem when plugging a hole from the outside of the ship. However, plugs on the outside of the ship cannot be tended easily nor will they hold very well over an extended period of time. If it is necessary to insert the plugs from the outside of the hull, fit the inboard ends of the plugs with screw eyes. A line running from each screw eye and secured to a solid structural member inside the ship will help to keep the plug in place.

Patching

Box patches are effective for use over holes that have jagged edges projecting inboard. View A of figure 8-3 shows a typical metal box patch; view B

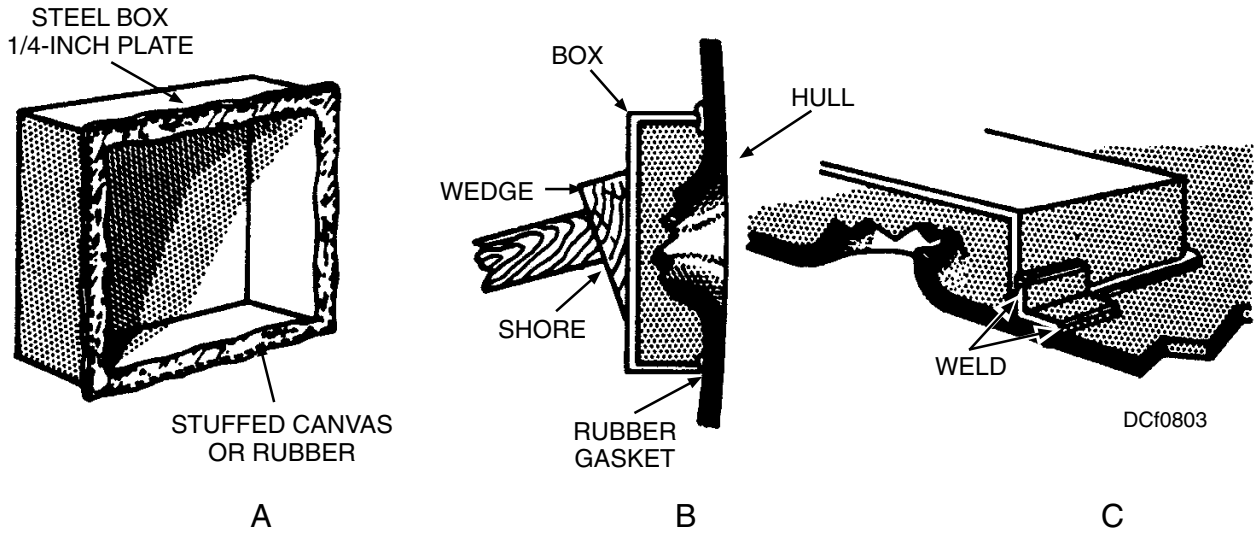

Figure 8-3. Application of a box patch.

shows a metal box patch held in place by shoring; and view C shows a metal box patch welded in place over a hole that has jagged edges.

A hinged patch is designed for use over relatively small holes. This patch has no vertical support to hold it in place. Figure 8-4 shows a hinged plate patch before, during, and after installation.

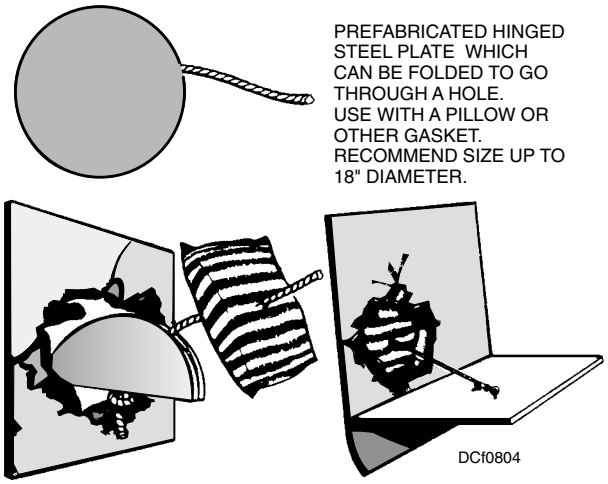

Figure 8-4. Application of a hinged plate patch.

A hook bolt is a long bolt that is usually fabricated from round steel stock. Hook bolts come in a variety of diameters and shapes. The head is shaped so that the bolt can be hooked to the plating through which the head has been inserted. Figure 8-5 shows T-shaped, L-shaped, and J-shaped hook bolts and how the hook bolts are used to apply a patch. The long shanks are threaded and are provided with nuts and washers. Wood (or sometimes steel) strongbacks are used with hook bolts.

To use a hook bolt, insert the head end of the bolt through the hole in the hull. Rotate or adjust the bolt until it cannot be pulled back through the hole. Slide a pad or gasket that is backed by a plank or strongback over the bolt. Secure the patch by tightening the nut. Generally, these bolts are used in pairs. Hook bolts can be used with a variety of patches and in various combinations.

The folding T-shaped hook bolt (figs. 8-6 and 8-7) has a hinge where the shank joins the crosspiece. This bolt can be folded and inserted through a small hole. When the bolt is pulled back, the crosspiece catches on the hull plating. By using this bolt, a crewmember standing inside the ship can put a patch on either the inside or the outside of the ship. By using a retaining line on the bolt, a strongback and a pillow can be threaded over the line and the entire patch folded and placed through the hole. When the line is hauled in, the patch fits against the ship. The patch can be re-adjusted to give a tighter fit. It is also possible to push the pillow and plate over the shank inside the ship to make an inside patch. Nuts and washers are provided to hold and tighten a patch; often large wing nuts are used. Figure 8-6 shows one way in which a folding T-shaped hook bolt can be used to secure a patch.

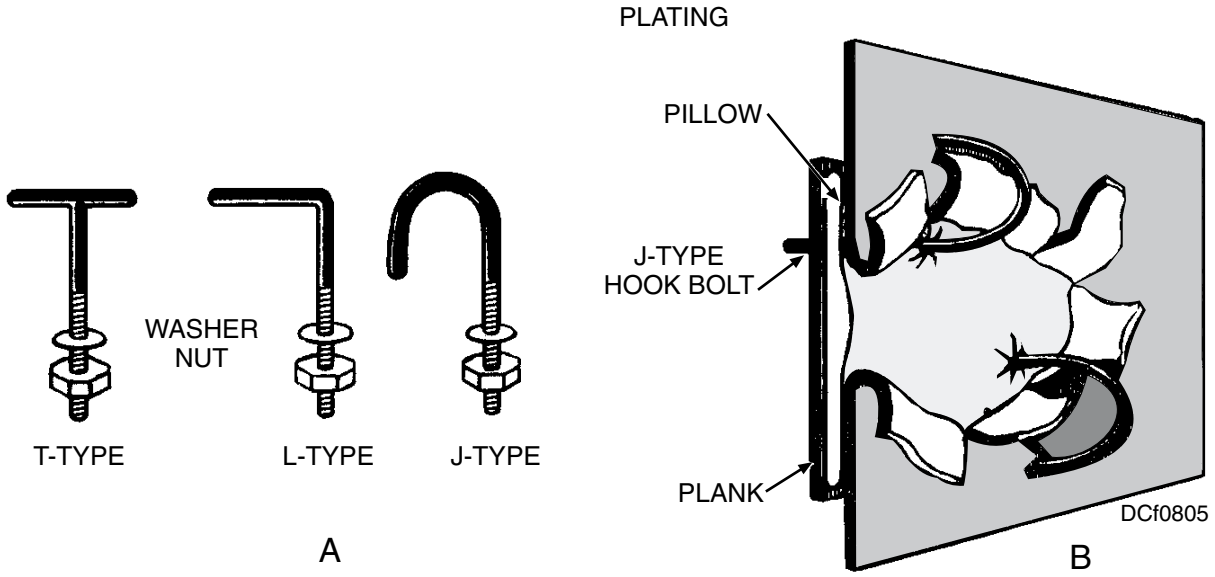

Figure 8-5. A. Types of hook bolts; B. Use of hook bolts in applying a patch.

Ordinary feather pillows have a tendency to ball up when they are wet and do not provide a uniform surface when used to patch holes. For this reason some ships may fabricate pillows made of canvas and oakum.

You will frequently find it necessary to improvise patches by using whatever material is handy. This calls for skill and a certain amount of imagination. Hinged or folding prefabricated patches are usually the easiest to use, and, in many cases, they are the most effective. But if they are not available, you will need to improvise patches.

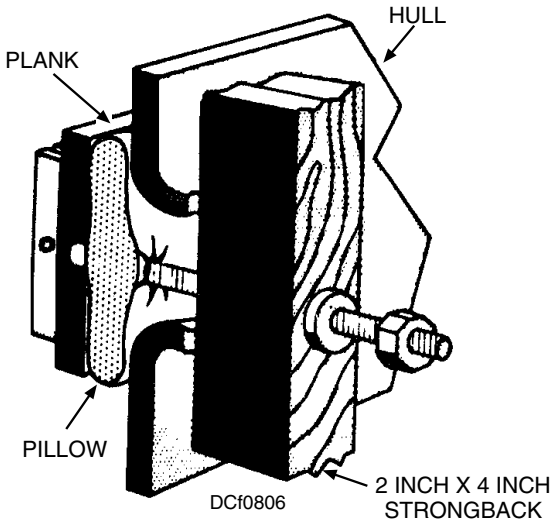

Figure 8-6. One method of installing a folding T patch.

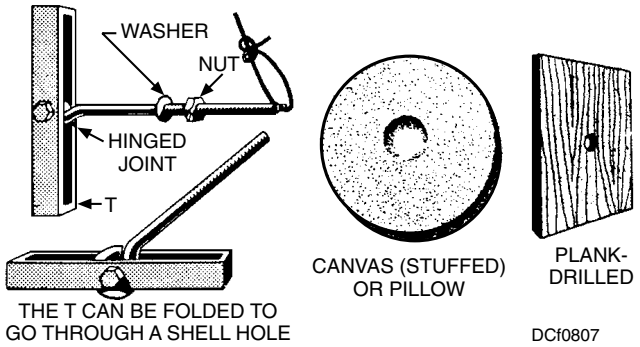

Figure 8-7. Materials used in assembling a folding T patch.

REVIEW QUESTIONS

Q4. What holes caused by battle damage should be given priority when plugging is needed?

1. All large holes
2. All small holes
3. Holes in the deck
4. Holes at the waterline or on the low side

Q5. The one very important thing to remember about flooding is that a ship can sink just as easily from a series of small and insignificant looking holes, as it can from one large and more dramatic looking hole.

1. True
2. False

Q6. Plugs made of softwood, such as yellow pine or fir, are quite effective for plugging holes up to what size?

1. 6 inches by 6 inches
2. 5 inches by 5 inches
3. 3 inches by 3 inches
4. 4 inches by 4 inches

Q7. It is best to wrap a plug with lightweight cloth before inserting it because the cloth keeps the plug in place and fills gaps between plugs.

1. True
2. False

Q8. What type of patches are effective for use over holes that have jagged edges projecting inboard?

1. Hinged
2. Folding T
3. Hook bolt
4. Box

SHORING

Learning Objective: Identify the various types of shoring materials and the general rules that govern their use.

Shoring is often used aboard ship to support ruptured decks, to strengthen weakened bulkheads and decks, to build up temporary decks and bulkheads against the sea, to support hatches and doors, and to provide support for equipment that has broken loose.

Knowing when to shore is a problem that cannot be solved by the application of any one set of rules. Sometimes the need for shoring is obvious. Examples are loose machinery or damaged hatches. However, dangerously weakened supports under guns or machinery may not be so readily noticed. Although shoring is sometimes done when it is not really necessary, the best general rule is this: "If in doubt, shore it."

SHORING MATERIALS

The basic materials required for shoring are as follows: shores, wedges, sholes, and strongbacks.

A **shore** is a portable beam.

A **wedge** is a block, triangular on the sides and rectangular on the butt end.

A **shole** is a flat block that may be placed under the end of a shore to distribute pressure.

A **strongback** is a bar or beam of wood or metal that is used to distribute pressure or to serve as an anchor for a patch. The strongback is often shorter than a shore.

Many other items are used in connection with shoring. They include wooden battens, claw hammers, mauls and sledges, handsaws, mattresses, pillows, axes, hatchets, wood clamps, chain falls, electric welding machines, oxyacetylene cutting outfits, cold chisels, wood chisels, nails, wooden plugs, packing sheets, turnbuckles, screw jacks, hydraulic jacks, bolts, nuts, and washers. The Coordinated Shipboard Allowance List (COSAL) lists the quantity of such gear that each ship should carry on board.

Shores

The best woods available for shores are Douglas fir and yellow pine. Hemlock and spruce may also be used. However, they are not as good because they are not as strong. Any wood used for shores should be straight grained and relatively free of knots and cracks. Green timbers are not as strong as cured timbers. If it is necessary to use a poor quality wood, use more shores than would be required for shores of a better quality wood. Shores authorized for shipboard use are treated with a fire-resisting chemical. They should NEVER be painted with an ordinary paint.

The length of a shore should never be more than 30 times its minimum thickness. Thus shores that have dimensions of 4 inches by 4 inches or 4 inches by 6 inches should not be any longer than 10 feet. A shore that is 6 inches by 6 inches should not be any longer than 15 feet. The shorter the shore is in relation to its thickness, the greater the weight it will support. Shores should normally be carried aboard ship in 16-foot and 18-foot lengths that can be cut to the required lengths when needed.

Wedges

Wedges should be of softwood, preferably fir or yellow pine. They should be cut with a coarse saw and left rough and unpainted. This allows the wedges to absorb water and hold better than if they are smoothed or painted. A few hardwood wedges should be kept on hand for special uses, since they resist crushing better. However, hardwood wedges cannot be used for all shoring because they have a tendency to work loose. When hardwood wedges are used, they must be checked frequently.

Wedges should be approximately the same width as the shores with which they are used. They may be made with various angles at the leading edge, but a blunt wedge will not hold as well as a sharp one. A wedge should be about six times as long as it is thick. Thus a wedge to be used with a shore that is 4 by 4 inches should be about 4 inches wide, 2 inches thick, and 12 inches long. Figure 8-8 shows some wedges and shows how they are used.

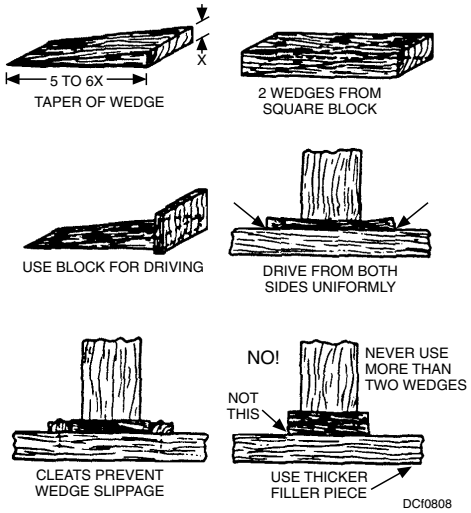

Figure 8-8. Wedges.

Sholes

Sholes should be made of Douglas fir or yellow pine planks that are at least 1 inch thick and 8 inches to 12 inches wide. Nailing cleats across two or more widths of planking can make wider sholes. A single plank may have to be cleated at the ends to keep it from splitting. Do not fabricate sholes in advance of the actual need for them; prefabricated sholes would probably not fit where they are needed. The use of a shole is shown in figure 8-9.

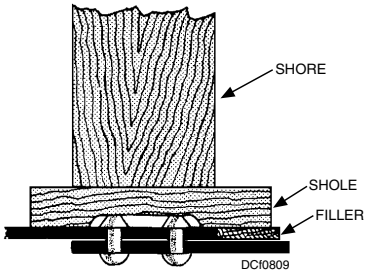

Figure 8-9. Use of a shole.

Strongbacks

All or part of an ordinary shore may be used to make a strongback. Shoring scraps should be kept for use as strongbacks and short shores. Heavy planks, steel bars, angle irons, and pipe can also be used as strongbacks (fig. 8-6).

Metal Shores

Several types of telescopic steel shores are used to make temporary repairs and some may be used for immediate repairs. The metal shores normally will have pins or locking devices and are fitted with a hinged shoe at each end. The pins or locking devices are used to adjust the length of the shore. The hinged shoe may be easily adjusted to any angle and then welded in place. The newer types of metal shores (fig. 8-10) are also fitted with screw jacks or swivel (ball-and-socket) bases.

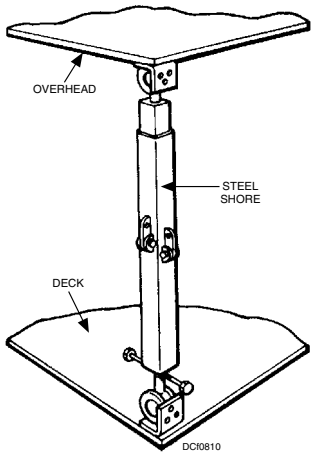

Figure 8-10. Steel shore supporting overhead deck or load.

The newer steel shores are available in two models as follows:

1. Model 3-5 is adjustable from a minimum of 3 feet, plus or minus 3 inches, to a maximum of 5 feet, plus or minus 3 inches. It will support a maximum vertical load of 20,000 pounds when closed to within 1 inch of the screw jack. It will support a maximum vertical load of 12,000 pounds when fully extended.

2. Model 6-11 is adjustable from a minimum of 6 feet, plus or minus 3 inches, to a maximum of 11 feet, plus or minus 3 inches. It will also support a maximum vertical load of 20,000 pounds when closed to within 1 inch of the screw jack. It will support a maximum vertical load of 6,000 pounds when fully extended.

These shores consist of two telescoping, square, steel tubes. Four spring-loaded locking devices, a swivel baseplate, and a screw jack are on the outer tube. A swivel baseplate is on one end of the inner tube. Each side of the shore has a spring-loaded locking device. Each locking device is on the same plane as the locking device on the opposite of it. However, there is a 2 1/4-inch offset of the adjacent locking devices.

The steel shores must be maintained in good operational condition. The tubes must slide easily, and the swivel joints must move freely. The threads of the screw jack must not have any paint on them. Both the swivel joints and the screw jack threads are to be clean and greased. All of the holes and slots are to be open and free of excess paint.

Steel wedges are more valuable for prying things apart than for actual shoring. Steel wedges may be used in conjunction with wooden wedges to take some of the wear and pressure off of the wooden wedges. Steel wedges can also be welded into place when making semipermanent repairs.

Steel sholes are better than wooden sholes for use under the ends of iron or metal pipe being used as a temporary stanchion because metal pipe can easily cut through wooden sholes.

Although steel bars, angle irons, and pipe can be used for strongbacks, their tendency to spring back and forth under variable loads must be considered. These materials can also be used for making semipermanent repairs when time is available.

SHORING KIT

Shoring kits are small enough to go through scuttles and other small openings. The items normally contained in a shoring kit are as follows:

- A canvas carrying bag that is approximately 30 inches deep and 12 inches in diameter
- One 10-pound sledge
- One 8-point crosscut handsaw
- One 10-foot metal tape rule
- One 50-foot metal tape rule
- One claw hammer
- One hatchet
- One 3/4-inch cold chisel
- One 1-inch wood chisel
- Eight adjustable clamps; four 6 inches and four 8 inches in nominal size
- One caulking hand tool
- One 24-inch carpenter's square
- One electric hand lantern
- Eight 2- by 4-inch softwood wedges
- One bag of nails; two pounds each of 20d and 30d common nails
- Five pounds of oakum or rags
- Five pounds of sand
- Several sections of shoring; 4 inches by 4 inches by 10 feet

MEASURING AND CUTTING SHORES

The most rapid and accurate way to measure a shore for cutting is to use an adjustable shoring batten similar to the one shown in figure 8-11. These battens can be made up from items carried aboard ship. Each repair party locker is required to have a shoring batten.

To use the shoring batten, extend it to the required length and lock it with the thumbscrews on the length locking device. Then measure the angles of cut by adjusting the hinged metal pieces at the ends of the batten. Lock the angle locking devices in place. Lay the batten along the shore. Mark and cut the timber to the proper length and angle. Shores should be cut one-half of an inch shorter than the measured length to allow space to install wedges.

If a shoring batten is not available, measure the shores for length by using a folding rule or a steel tape and a carpenter's square. The step-by-step procedure for measuring shores in this way, as shown in figure 8-12, is as follows:

Step 1. Measure distance A from the center of the strongback to the deck. This distance is known as the "rise." Then measure distance B from the edge of the anchorage to the bulkhead. This distance is known as the "uncorrected run." Subtract the thickness of the strongback from measurement B. This distance is now known as the "corrected run."

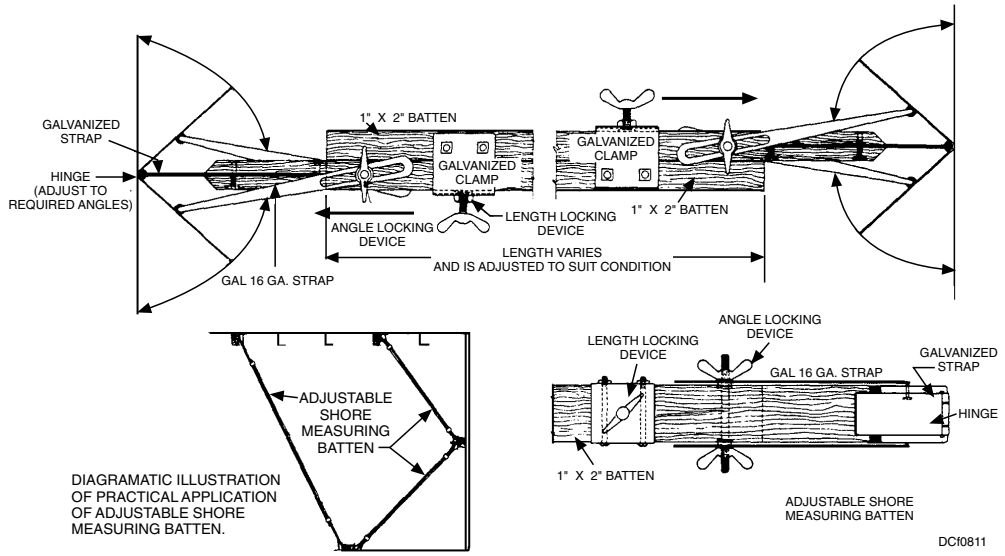

Figure 8-11. Shoring batten.

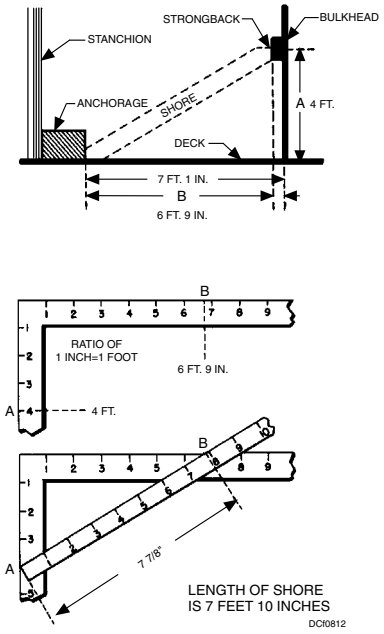

Figure 8-12. Measuring length of shore.

Step 2. Lay off the measurements A and B on a carpenter's square, using the ratio of 1 inch to 1 foot. Rule measurement is taken to the nearest one-sixteenth of an inch. To maintain the 1-inch to 1-foot ratio, use table 8-1.

Step 3. Measure the diagonal distance between A and B. In the example given in figure 8-13, this distance is 7 7/8 inches. Because of the 1-inch to 1-foot ratio, the distance in feet would be 7 7/8 feet or 7 feet 10 1/2 inches.

Table 8-1. Actual Rule Measurement and Measurement on Carpenter's Square

ACTUAL RULE MEASUREMENT	MEASUREMENT ON CARPENTER'S SQUARE
3/4 inch	1/16 inch
1 1/2 inches	1/8 inch
2 1/4 inches	3/16 inch
3 inches	1/4 inch
3 3/4 inches	5/16 inch
4 1/2 inches	3/8 inch
5 1/4 inches	7/16 inch
6 inches	1/2 inch
6 3/4 inches	9/16 inch
7 1/2 inches	5/8 inch
8 1/4 inches	11/16 inch
9 inches	3/4 inch
9 3/4 inches	13/16 inch
10 1/2 inches	7/8 inch
11 1/4 inches	15/16 inch
12 inches	1 inch

Step 4. Subtract one-half because shores should be cut one-half of an inch shorter than the measured distance to allow for the required wedges. Thus the final length of the shore should be 7 feet 10 inches.

The carpenter's square may also be used to measure the angles of cut and to mark the shore for cutting (fig. 8-13). Using the same measurements as in the previous example, proceed as follows:

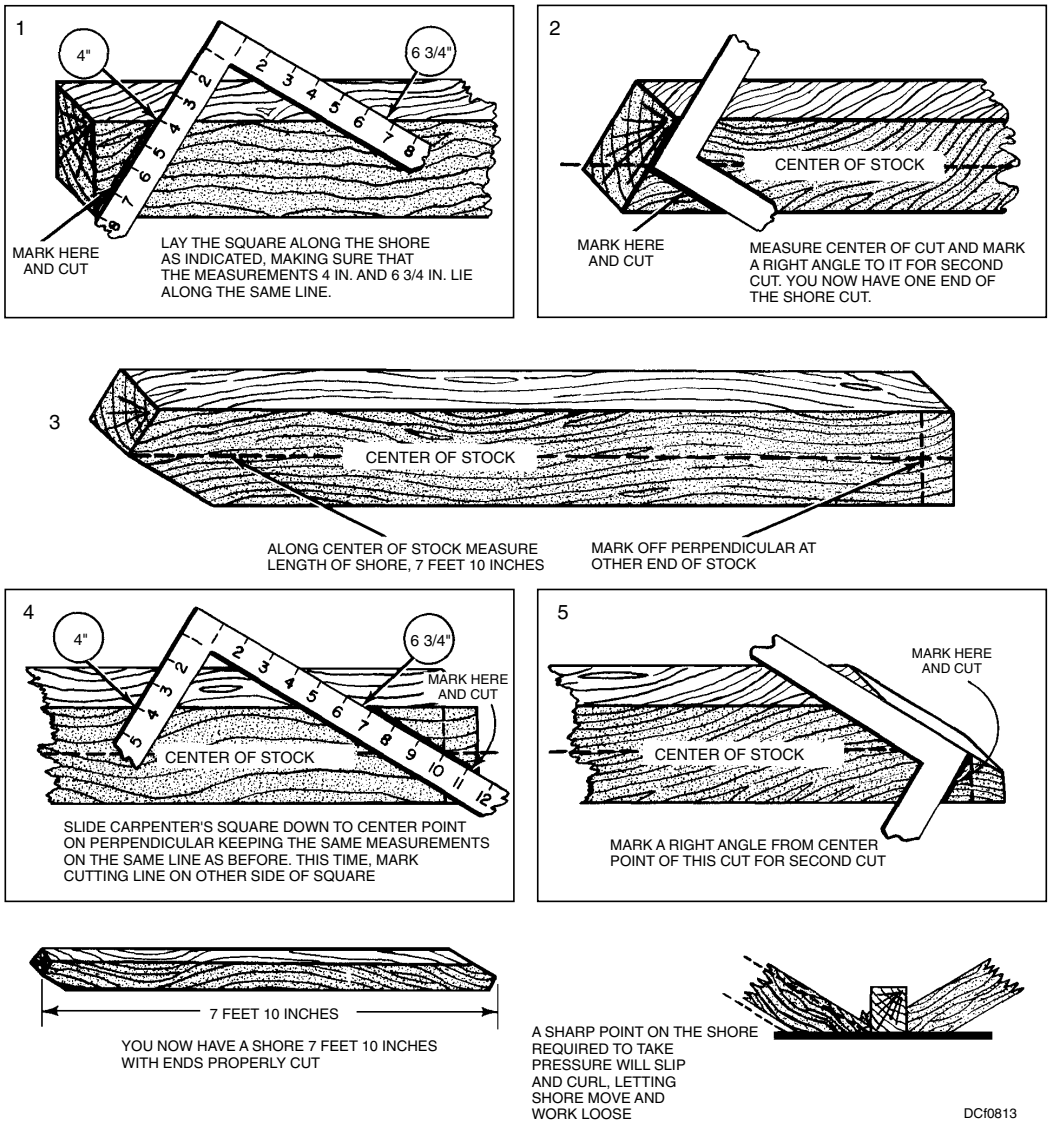

Figure 8-13. Cutting the angles of a shore.

Step 1. Lay the square along the shore, as shown in part 1 of figure 8-13, making sure that the measurements 4 inches and 6 3/4 inches lie along the same line. Cut the shore to this line.

Step 2. Measure the center of the cut and mark a right angle to it for the second cut. Saw to the line. You have now completed cutting one end of the shore.

Step 3. Along the center of the timber, measure the length of the shore (7 feet 10 inches) and mark off a perpendicular line at the other end of the shore.

Step 4. Slide the carpenter's square down to the center point on the perpendicular. Keep the same measurements on the same line as before in step 1. This time, mark the cutting line on the other side of the square.

Step 5. Mark a right angle from the center point of this cut for the second cut. Make your cuts. You now have a shore that is 7 feet 10 inches long with the ends properly cut to fit the measurements.

The proper cutting of shores is an important part of any shoring operation. Shores are usually cut with a hand-held circular saw. However, you may use an ordinary carpenter's handsaw. All repair party personnel should be instructed in the correct use of these tools. Shores that are poorly cut may cause a delay in completing the shoring job and may cause failure of the shoring structure. You will find that the wedges and shores will not fit properly if the shores are not cut correctly. Wet timbers are particularly hard to cut unless the proper methods of sawing are used. In cutting heavy shores, a lumberjack crosscut saw will save a good deal of time. Chisels, axes, and hatchets are also used to cut shores.

TRIMMING SHORES

Shores must be trimmed to fit the shoring structure. The trimming must be done in such a way as to prevent splitting or chipping of the shores. If shore A in figure 8-14 is to fit against a plane surface of shore B and if it must take a load in compression, the end of shore A must be cut square and perpendicular to its long axis.

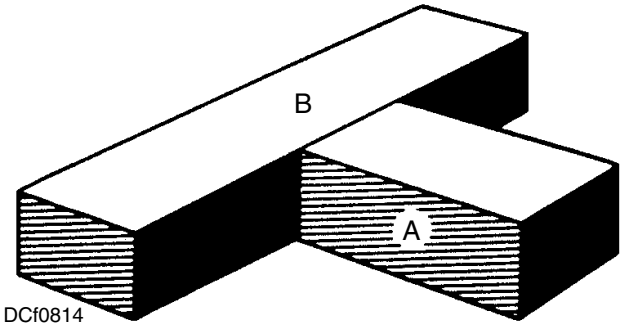

Figure 8-14. Trimming shore to shore.

A sharp point must never be used when a shore will be required to withstand pressure. A pointed end will slip and curl and allow the shore to work loose and move. Figure 8-15 shows the correct and incorrect ways to trim shores to present a flat surface at each pressure area.

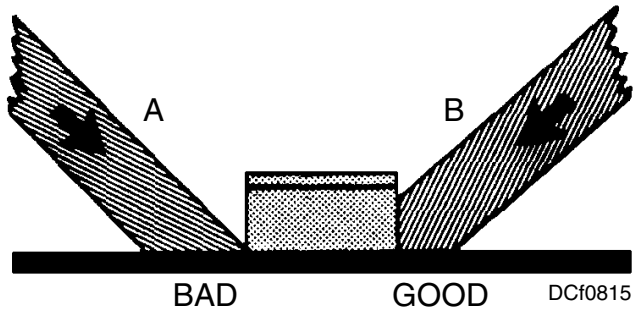

Figure 8-15. Trimming shore to deck.

Shores are sometimes notched at the end to fit against other shores. However, this method should not be used if you expect any great pressure. A safer method is to cut a socket in the side of one shore and fit the butt of the other shore into the socket. This method is shown in figure 8-16.

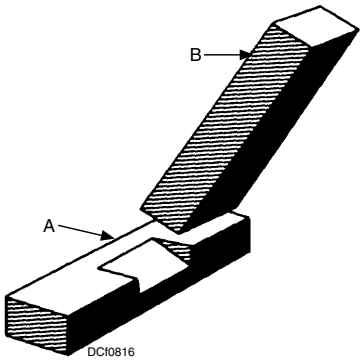

Figure 8-16. Socket cut in shore.

GENERAL SHORING RULES

Most shoring is done to support bulkheads that are endangered by structural damage or weakness caused by a hit or by the pressure of flooding water. The pressure on the bulkhead of a flooded compartment is tremendous. Expert shoring is required to hold such bulkheads in place. Some of the general rules to remember in connection with shoring bulkheads are as follows:

- Always allow a large margin of safety. Use MORE shores than you think you need, rather than fewer.
- Spread the pressure. Make full use of strength members by anchoring shores against beams, stringers, frames, stiffeners, stanchions, barbettes, and so forth. Place the legs of the shoring against the strongback at an angle of 45° or 90° if at all possible. Figure 8-17 shows the simplest and strongest shoring structure; figure 8-18 shows shoring angles.
- Do not attempt to force a warped, sprung, or bulged bulkhead back into place. Place the shoring so that it will hold the bulkhead in its warped or bulging position.
- When possible, strengthen the main shores with auxiliary shores.

The same general rules apply to shoring a hatch or a door. However, the entire hatch or door should be shored and the pressure should be spread over both the hatch cover or door and the supporting structure, as shown in figure 8-19. Remember that hatches and doors are the weakest part of the bulkhead or deck in which they are installed. Shoring doors and hatches may be complicated by the presence of scuttles and quick-acting handwheels. In the situation shown in figure 8-19, the shores are arranged in such a way as to

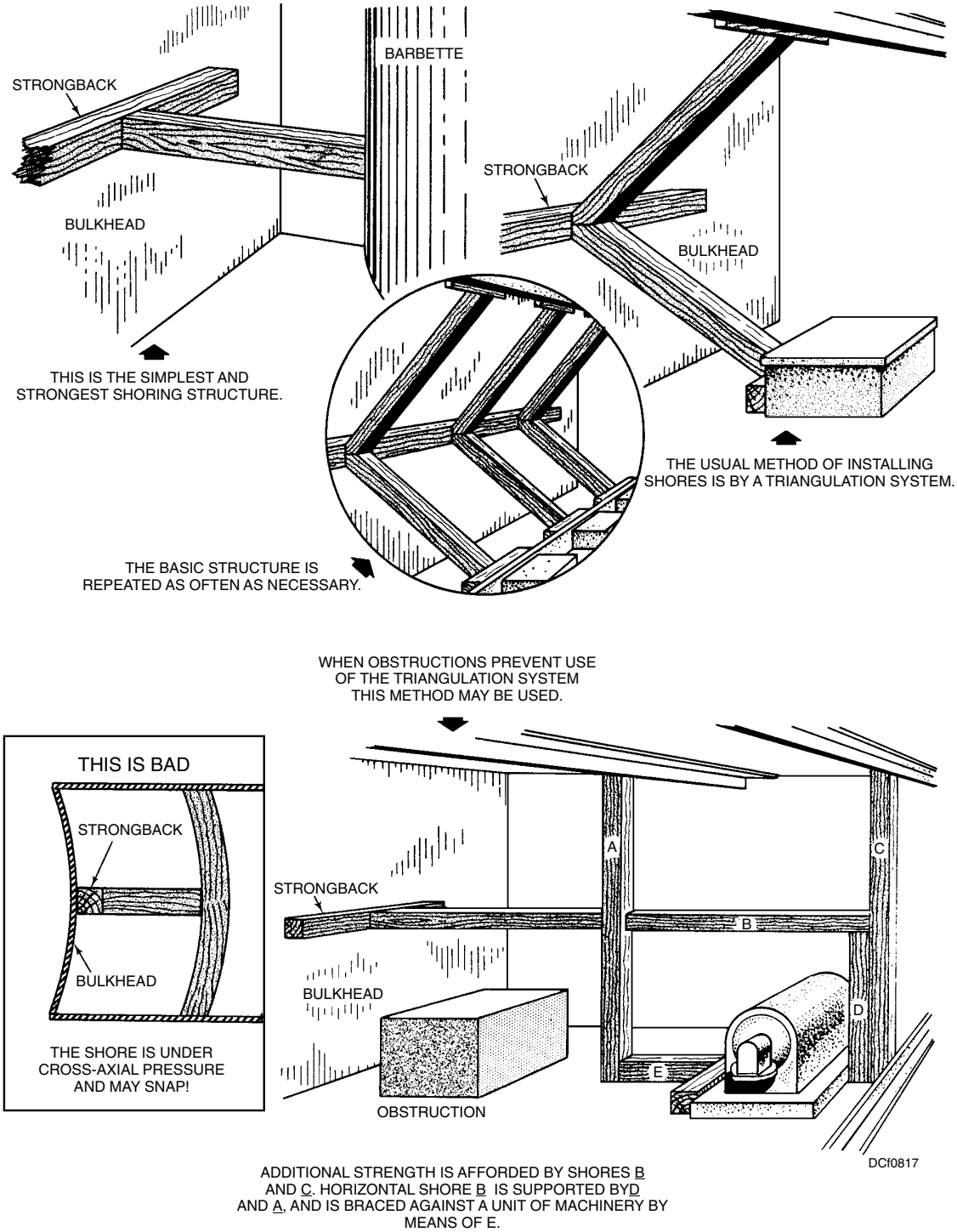

Figure 8-17. Shoring against horizontal pressure.

clear the handwheel. A basic rule is to put as many points of pressure on the closure as there are dogs on the closure.

The success of any shoring job depends largely on the way in which the timbers are wedged. As the shoring job progresses, check carefully to ensure that all of the wedges are exerting about the same amount of pressure on the member being shored. Use as few wedges as possible to obtain satisfactory results. Always drive the wedges in uniformly from both sides so that the shore end will not be forced out of position. Lock the wedges in place so that they will not work loose and cause the shoring to slip. Figure 8-20 shows one method of locking wedges in place.

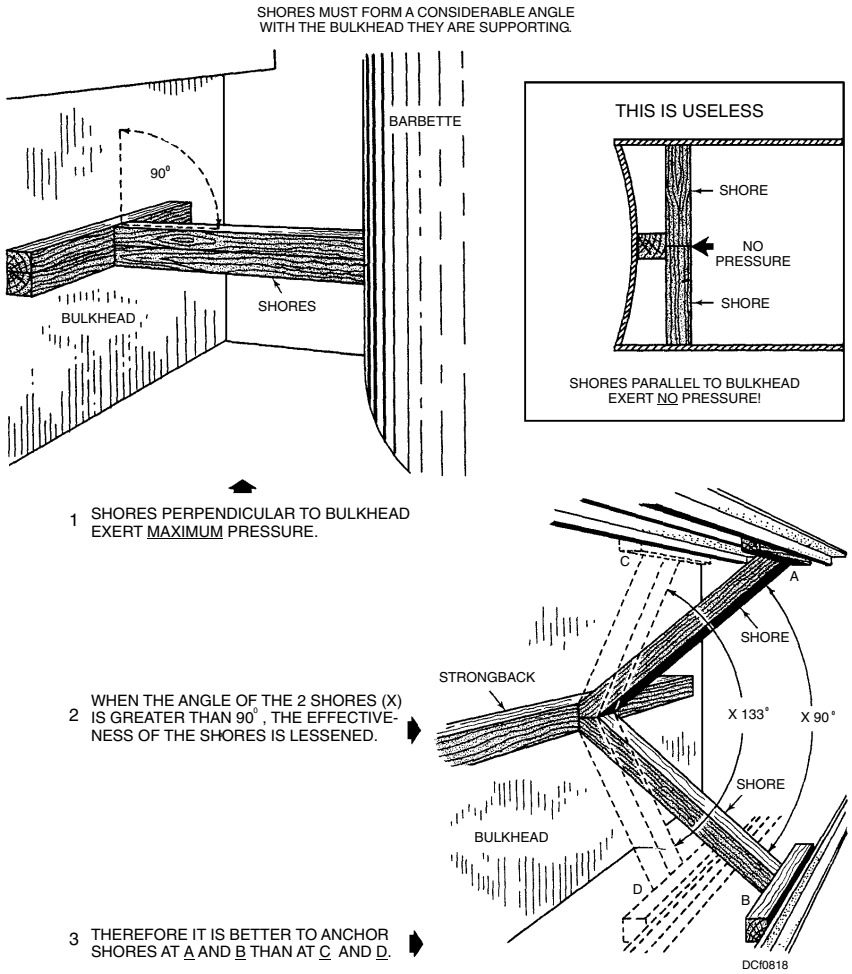

Figure 8-18. Shoring angles.

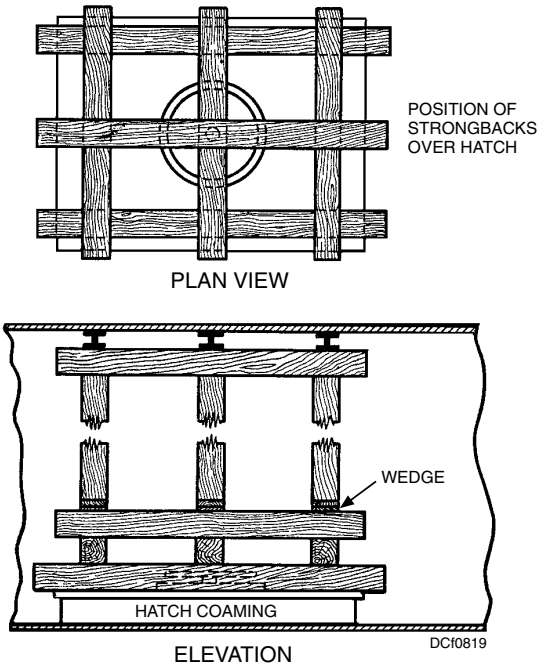

Figure 8-19. Shoring a hatch.

PRACTICE SHORING

If you are in charge of a shoring detail and if you have enough shores on board, it would be a good idea to give your shoring detail personnel some practice in shoring. As they put up the shoring, explain what they are doing right and what they are doing wrong and, in each case, why it is right or wrong. Ensure that they understand the principles of spreading the pressure, and why a shore in cross-axial pressure might snap. Be sure that they learn how to measure shores and how to cut them correctly before they actually do the cutting. If possible, obtain permission to put the shoring up in a compartment where it may be left for a few days. This will allow other personnel to inspect it and indirectly learn something about how to shore.

When doing practice shoring jobs, be careful not to cut the shores more than necessary. You will seldom have an oversupply of shores aboard ship. If you do not have spare shores for practice jobs, use strips and

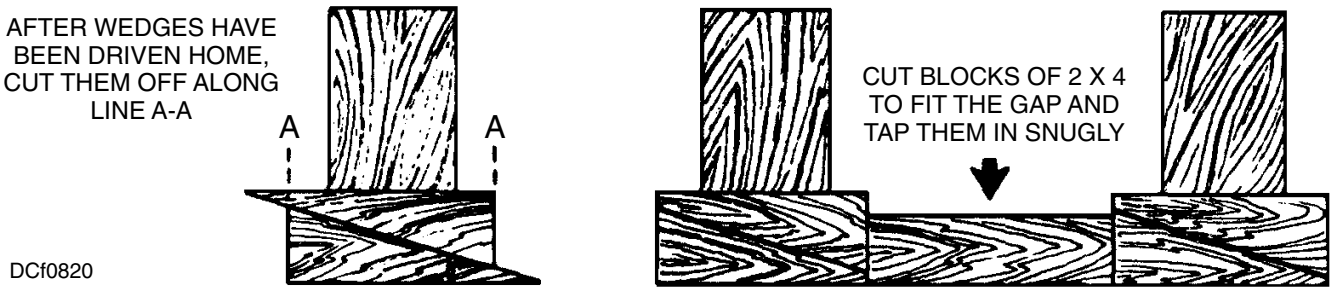

Figure 8-20. Locking wedges in place.

battens to build mock-ups and models to scale. Although models are not as effective for training as actual practice shoring jobs, they do have some training effect. An important advantage of models is that you can work out some rather elaborate shoring problems with them. Also, the models can be kept and used again and again for training purposes.

After the shoring practice has been completed (whether using a model or full-size shores), it is a good idea to have the shoring detail personnel discuss the job and make comments on the good and bad points of the shoring. Some of the questions to be brought up in this discussion include the following:

- Is the shoring job effective?
- Could it be made just as effective with fewer shores?
- Should more shores have been used?
- Is the shoring pressure correctly spread?
- Is the wedging done correctly?

This type of questioning and discussion can be effective as a device for making sure that everyone involved really understands the problems and principles of shoring.

REVIEW QUESTIONS

Q9. Which of the following woods are best to use for the construction of shores?

1. Walnut and pecan
2. Balsam and spruce
3. Douglas fir and yellow pine
4. Redwood and birch

Q10. A shore is a portable beam, a wedge is a block, triangular on the sides and rectangular on the butt end, and a shole is a flat block that may be placed under the end of a shore to distribute pressure.

1. True
2. False

Q11. A strongback is a bar or beam of wood or metal that is used to distribute pressure or to serve as an anchor for a patch. The strongback is often shorter than a shore.

1. True
2. False

Q12. What is the fully extended load for the model 6-11 steel adjustable shore?

1. 9,000
2. 8,000
3. 7,000
4. 6,000

Q13. A steel wedge is considered more valuable as a prying tool than for actual shoring.

1. True
2. False

Q14. The most rapid and accurate way to measure a shore for cutting is to use an adjustable shoring batten.

1. True
2. False

EMERGENCY ACCESS EQUIPMENT

Learning Objective: Recall the requirements and procedures for using emergency access equipment.

Earlier in this chapter, different types of damage control kits were mentioned that are used to control damage. But what equipment is available on the ship in case a space is inaccessible due to damaged doors, hatches, and scuttles? The answer is the Portable Hydraulic Access and Rescue System (PHARS) and the Portable Exothermic Cutting Unit (PECU).

PORTABLE HYDRAULIC ACCESS AND RESCUE SYSTEM (PHARS)

Already proven as a valuable piece of equipment by civilian fire departments, the Navy has approved the Portable Hydraulic Access and Rescue System (PHARS) for use as emergency damage control equipment. PHARS can be utilized in emergency access, personnel rescue, or fire-fighting operations involving spreading, cutting, pulling, and piercing light plate or sheet metal. There are several different types of these units available in the fleet. Each ship should have at least one PHARS kit.

The power unit for the PHARS houses a diesel engine designed to power the hydraulic pump used to pressurize the hose reel. The hose reel has 100 feet of hydraulic hose attached. This hose has a manifold used for attachments that include cutters, extension ram, and spreader.

Damage control personnel are required to know how to operate this equipment. They must also test it and maintain it by performing minor repairs and ensuring the equipment is properly lubricated. For detailed information, you should refer to the appropriate technical manuals and to the ship's Planned Maintenance System (PMS).

PORTABLE EXOTHERMIC CUTTING UNIT (PECU)

The Portable Exothermic Cutting Unit (PECU) is a valuable piece of damage control equipment that provides rapid access into areas of the ship where normal access is impaired. The PECU can be used for cutting into a deck to vent a compartment due to extreme temperatures from fire that prevents normal entry. The PECU can also be used for fire-fighting operations and to drain water from areas of the ship where the effects of accumulated water from fire-fighting operations may impair the ship's stability.

The PECU utilizes expendable cutting rods, which operate on the exothermic torch principle. This principle involves the use of oxygen, which is combined with fuel. In this case, the fuel is a steel tube. The exothermic cutting rod is ignited when the oxygen passing through the iron rod comes in contact with a spark generated from a 12-volt dc battery-powered igniter. Once ignited, the fuel rod will continue to burn until expended, provided the oxygen flow is maintained. Releasing the oxygen lever will extinguish the rod. A 12-volt battery is the maximum electrical power permitted because larger power sources will melt cables.

The exothermic torch can cut through most materials, including steel, aluminum, laminates, piping, and cables. The unit can operate with a cutting rod and torch handle underwater as well as in the air. Commercially available units may not provide the underwater cutting capability.

Holes cut in the ship's structure with the PECU should be circular and be no less than 6 inches nor more than 19 inches in diameter. Forming of corners that initiate or induce stress cracking must be avoided.

Damage control personnel are required to know how to operate this equipment. They must also test it and maintain it by performing minor repairs and ensuring the equipment is properly lubricated. For detailed information, you should refer to the appropriate technical manuals and to the ship's Planned Maintenance System (PMS).

WARNING

Do not cut piping that is pressurized, piping containing flammable fluids, or electrical cables that are energized.

The exothermic torch produces sparks and molten slag that can burn personnel, damage equipment, or ignite combustibles on both sides of the deck or bulkhead being cut.

When using the torch in weather, the operator and other personnel should position themselves upwind of the cut, and the cut should be started downwind of the planned hole so the molten slag, heat, and smoke formed by the torch or vented from the hole will blow clear of personnel. The access team should have smoke curtains; plugging, patching, and shoring materials; and fire-fighting equipment immediately available as applicable to the situation.

Operation of the PECU will generate a large fume plume. In some situations, it may be necessary to provide respiratory protection or emergency ventilation to the operator, or even for the operator to don an OBA. If an OBA is worn, it should be shielded from molten splatter. The equipment technical manual contains specific directions for maintenance, stowage, and cleaning of the PECU. These directions include the following:

- Keep the oxygen feed system clean (free of oil, grease, and dirt).
- Ensure the flash arrester is in place before use.
- Ensure the collet nut and washer are in good condition.
- Remove the fuel rod before storing the PECU.
- Never leave the torch unattended with the oxygen feed system pressurized or the ignition system energized.
- Remove all slag, dirt, and debris from the external surfaces before storing the PECU.

REVIEW QUESTIONS

Q15. Which of the following types of equipment are available on the ship in case a space is inaccessible due to damaged doors, hatches, and/or scuttles?

1. Drills and circle saws
2. Reciprocating saws and sheet metal shears
3. Acytelene torches and hammers
4. The Portable Hydraulic Access and Rescue System (PHARS) and the Portable Exothermic Cutting Unit (PECU)

Q16. PHARS can be utilized in emergency access, personnel rescue, or fire-fighting operations involving spreading, cutting, pulling, and piercing light plate or sheet metal.

1. True
2. False

Q17. The PECU utilizes expendable cutting rods, which operate on the exothermic torch principle.

1. True
2. False

EMERGENCY PIPE PATCHING

Learning Objective: Recall emergency pipe patching procedures.

Damaged piping systems are another source of flooding in compartments. The pipes may have small holes or cracks, or be totally severed. Normally, you will want to isolate the damage by securing the cutout valves on each side of the damaged section of piping. However, whether the piping may be secured, and the amount of time it can be secured, will depend on the service the system provides. A saltwater flushing line may stay secured until repairs can be made after vital repairs have been completed. However, you will need to make temporary repairs on some lines immediately to put the system back into service. Firemain piping, fuel oil lines, and chill water cooling lines to electronic spaces should be repaired as soon as possible.

Small holes in some piping may be temporarily repaired if you drill the hole out, thread it, and then insert a machine screw. Other holes will require a different means of patching. You may use a jubilee pipe patch, a soft patch, or a metallic pipe patch. The materials for all of these repairs are found in the pipe-patching kit.

Pipe-patching kits are available in the ship's repair lockers. Each kit contains the following items:

- A canvas bag approximately 30 inches deep and 12 inches in diameter
- Several small softwood plugs and wedges; enough to plug 24 inches of split
- Approximately 8 square feet of 1/8-inch rubber gasket
- Approximately 8 square feet of canvas
- One hundred and fifty feet of marlin
- Three pounds of oakum or rags
- One hacksaw with a minimum of six spare blades
- One hatchet or wood chisel
- One hammer; 2 pounds in weight
- A pair of scissors or a knife for cutting the materials
- A banding kit
- Jubilee pipe patches; a minimum of five in various sizes

JUBILEE PIPE PATCH

The jubilee pipe patch (fig. 8-21) is a modification of a commercial hose clamp. Periodically, you may purchase heavy-duty jubilee pipe patches through the supply system. However, if you cannot purchase them, you can manufacture them yourself.

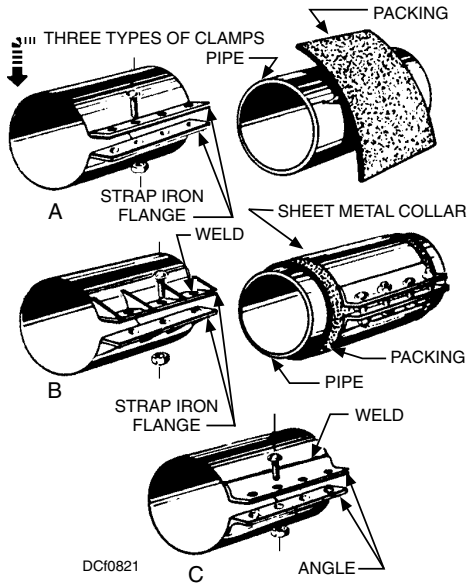

Figure 8-21. Jubilee pipe patches.

To manufacture a jubilee pipe patch, roll a piece of sheet metal into a cylinder. Bend a tab on each edge to form a flange. The flanges may be reinforced by welding on strips of scrap iron. Drill three to five holes through both flanges for the securing bolts. To keep the flange faces somewhat parallel when under pressure, weld small braces from the flanges to the back of the patch. Use a thick gauge sheet metal that will withstand pressure but can also be sprung open enough to be put over the pipe.

To use the jubilee pipe patch, put a piece of rubber or gasket material over the hole. It should be large enough to cover and overlap the damage at least 2 inches on all sides. Slip the jubilee pipe patch over the rubber or gasket material. Insert the bolts into the holes and secure them in place. The jubilee pipe patch can withstand 100 pounds of pressure.

SOFT PATCH

Small holes or cracks in low-pressure (150 psi) piping can often be repaired by applying a soft patch (fig. 8-22). When it is possible, reduce the area of the hole first by driving in softwood plugs and wedges as necessary. Do not drive the plugs and wedges in too far or else they will retard the flow of the fluids in the pipe. Once the plugs and wedges are in place, trim them off flush with the outside surface of the pipe. Cover the damaged area with a piece of rubber that will completely cover and extend about 2 inches past the damaged area on all sides. Use two tightly wound layers of marlin or wire to hold the rubber in place.

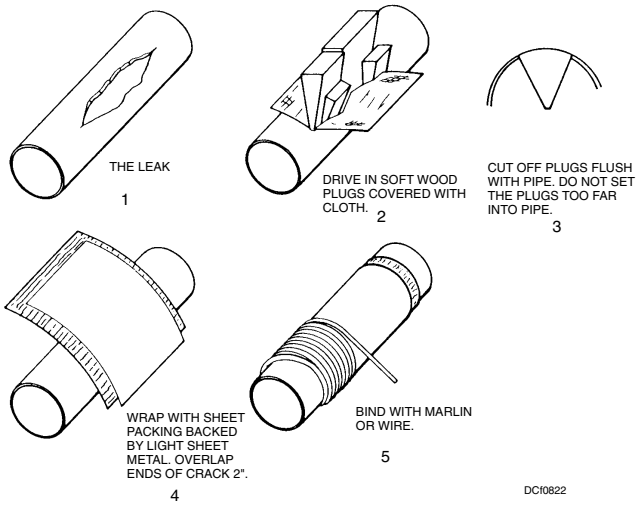

Figure 8-22. Soft patch on a low-pressure pipe line.

The soft patch can be modified or improved to suit the conditions at hand. Often it is advisable to use a curved piece of lightweight sheet metal between the rubber and the marline or wire. A coat of red lead on the face of the rubber will help and you can use marlin and oakum as a caulking material in the cracks.

The Emergency Water-Activated Repair Patch (EWARP) shown in figures 8-23 and 8-24 is a unique and easy to use pipe patch that can be used on many piping systems. The EWARP comes in a clear plastic package that includes a foil package containing the instant repair resin coated cloth and a pair rubber gloves. The patch comes in two different sizes; size 1 which is 3 inches by 9 feet and size 2 that is 4 inches by 15 feet. Maximum operating pressure is 150 psi. Normal operating temperature should not exceed 300 degrees Fahrenheit. The syntho-glass patch must be firmly wrapped around the damaged area extending several inches. If needed, the excess can be cut with a knife. The patch can also be sanded and painted. The EWARP is fully hardened in 30 minutes and complete function of the system can be resumed.

CAUTION

Do NOT use the Emergency Water-Activated Repair Patch (EWARP) on potable water inlet lines or fuel systems.

Figure 8-23. Emergency Water-Activated Repair Patch (EWARP).

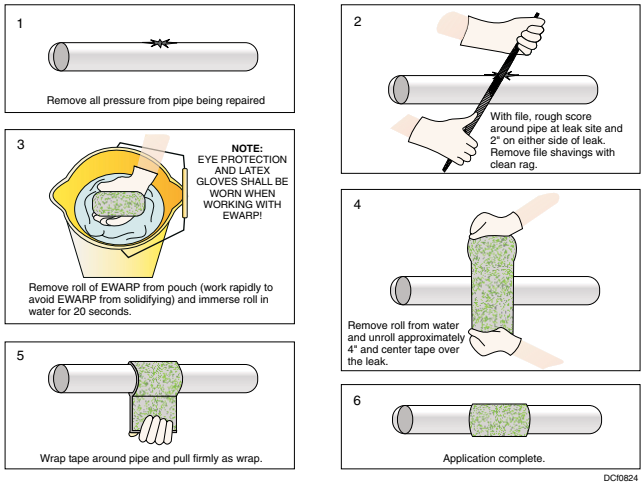

Figure 8-24. Steps for using EWARP.

REVIEW QUESTIONS

Q18. What is the maximum pounds of pressure a jubilee patch can resist?

1. 100 pounds
2. 125 pounds
3. 150 pounds
4. 175 pounds

Q19. What is the maximum pounds of pressure a soft patch can resist?

1. 500 pounds
2. 225 pounds
3. 150 pounds
4. 125 pounds

CASUALTY POWER SYSTEM

Learning Objective: Recall the purpose of the casualty power system and describe the components of the system.

The casualty power system (fig. 8-25) is one of the most important shipboard damage control systems. The system is a simple electrical distribution system. It is used to maintain a source of electrical power for the most vital machinery and equipment needed to keep the ship afloat or to get the ship out of a danger area. The casualty power system is intended to provide power during real emergencies only. It must NOT be used as a means of making temporary routine repairs.

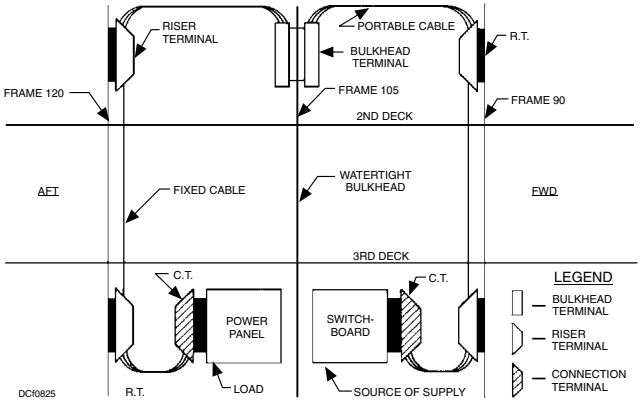

Figure 8-25. Casualty power run.

A casualty power system consists of the following items:

- Portable cables stowed in racks throughout the ship
- Bulkhead terminals for carrying the circuit through bulkheads without breaking the watertight integrity of the ship
- Risers between decks

- Casualty power connections at the source of supply

Portable casualty power cables are equipped with metal tags that indicate the length of the cable and the location of the cable stowage rack (fig. 8-26). Portable casualty power cables should be rigged only when required for use or when required for practice in rigging the casualty power system. At all other times, the cables should be stowed in the cable rack inicated on the cable tag.

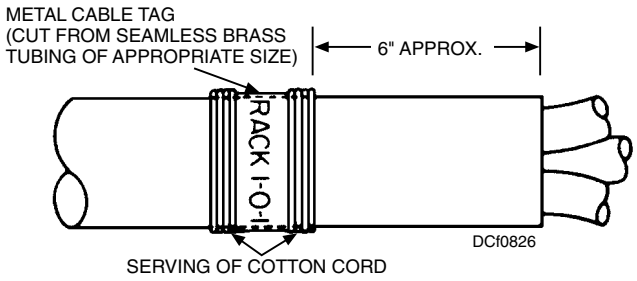

Figure 8-26. Portable casualty power cable tag.

When casualty power cables are rigged, the connections must always be made from the load to the supply to avoid handling energized cables. Portable signs saying DANGER—HIGH VOLTAGE must be posted at each connection and at 10-foot intervals along the length of the cable. The cables must be secured to the overhead, clear of the deck.

Sources of supply for casualty power use are provided at each ship's service and emergency switchboard. These consist of casualty power connection terminals on each switchboard; the terminals are connected to the bus bars through circuit breakers. Some ships also have small diesel-driven generators designated for casualty power use only. These generators are quite small and have very little control equipment.

Casualty power connection terminals are installed in power panels that feed equipment designed to receive casualty power. The casualty power connection terminals on the power panels may also be used as a source of supply to the casualty power system.

WARNING

All terminals on power panels are HOT. The normal supply to a panel must be shut OFF before the casualty power cable is connected to the terminals.

Machinery that can be supplied by the casualty power system includes steering gear, IC switchboards, fire pumps, and vital auxiliaries in firerooms and engine rooms.

The equipment and fixtures that make up an alternating current (ac) casualty power system include the following:

- Racks containing various lengths of portable thermoplastic covered or neoprene-covered cable. Each cable contains three leads or conductors (fig. 8-27). One lead is colored black, one is white, and one is red. This same color code is used in all three-wire power circuits throughout the electrical installations aboard ship.

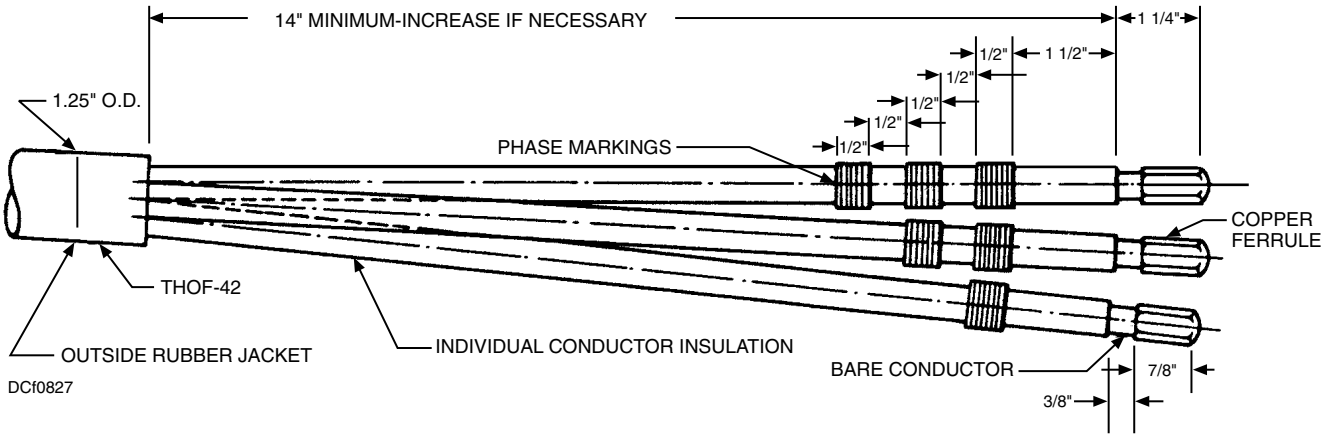

Figure 8-27. Portable casualty power, 450 volts, three-phase cable end.

- On small ships, bulkhead terminals provide for a single horizontal run of portable cable along the main deck, inside the superstructure. On large ships, there are generally terminals for two horizontal runs, one port and one starboard. These runs are located on the second deck. The terminals extend through the bulkhead and project from it on both sides. They do not impair the watertight integrity of the ship. The cable ends are inserted around the outer rim (or curved surface) of the terminal into the holes provided. There are three groups of three holes each. The face of the terminal also contains three groups of three holes each. The square-shanked insulated wrenches fit into these holes and are used to secure the cable in the terminal. Two of these wrenches are provided in a rack mounted on the bulkhead at each point where they are required. They must be kept in the rack at all times except when they are actually in use.

- Riser terminals are similar to bulkhead terminals. However, they are connected to other riser terminals by permanently installed armored cable to provide vertical runs. These riser terminals carry the casualty power from the generators to the main and the second deck levels.

- Portable switches are sometimes mounted on bulkheads near the cable racks. These are simply ON-OFF switches that are equipped with special holes for use with the portable cables.

The faces of the casualty power terminals of an ac system are marked A, B, and C, and the ends of the cables are colored black, white, and red, respectively. When connecting the cables to the terminals, connect the black lead to A, the white lead to B, and the red lead to C.

The color code is not sufficient for making proper connections in the dark or under other adverse conditions. Therefore, it is necessary to provide some means to identify each lead and its proper hole in the terminal by touch. This is accomplished by molded knobs in the A, B, and C portions of the terminals. There are one, two, or three knobs, respectively, in the A, B, and C portions of the terminals. Similarly, a piece of heavy twine is placed on the black lead of the portable cables, two pieces are placed on the white lead, and three pieces are placed on the red lead. Each of these servings of twine is about one-half of an inch wide.

NOTE

A new method of phase identification is similar to the old method, except that O rings and heat shrinkable tubing have been substituted for the cotton cord servings, as shown in figure 8-28.

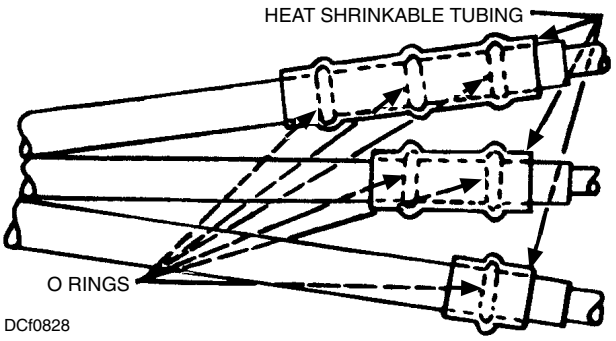

Figure 8-28. New method of cable identification.

Each lead and its corresponding position in the terminal can be identified by merely feeling the leads and matching the number of pieces of twine on each lead with the same number of raised knobs in the proper area of the terminal. In older ships, the casualty power fittings have identifying V-shaped notches in the outer edge of the fittings instead of the knobs.

When connecting a casualty power cable run, remember that you must ALWAYS connect from the load to the source of supply. This is to avoid working with live cables.

REVIEW QUESTIONS

Q20. When casualty power cables are rigged, the connections must always be made from the load to the supply to avoid handling energized cables.

1. True
2. False

Q21. Which of the following machinery can NOT be supplied by the casualty power system?

1. Steering gear
2. IC switchboards
3. Fire pumps
4. Main boiler plants

SUMMARY

When battle damage occurs, it must be repaired. In most cases, you will make a temporary repair until a permanent repair can be made. Shoring, plugging, and patching are your normal means of making the necessary temporary repairs. When the power source for certain vital equipment is discontinued, you will be required to supply power to the equipment by an alternate means, known as the casualty power system. Review the information presented to you in this chapter until you are familiar with it. If it is possible, you should put this knowledge into practical use with training aids such as a section of pipe that may be connected to a ship's fireplug. And always remember that you should not use expendable materials for training purposes until you have received permission from your work center supervisor or the damage control assistant (DCA).

REVIEW ANSWERS

A1. What document provides several repair locker inventory lists for various types of ships. **(2) The Allowance Equipage List**

A2. On a Navy ship, what personnel are responsible for damage control? **(1) All hands**

A3. After each use, all damage control kits and repair locker equipment must be inventoried to meet what requirements? **(2) PMS**

A4. What holes should be given priority when plugging is needed? **(4) Holes at the waterline or low side**

A5. The one very important thing to remember about flooding is that a ship can sink just as easily from a series of small and insignificant looking holes as it can from one large and more dramatic looking hole. **(1) True**

A6. Plugs made of softwood, such as yellow pine or fir, are quite effective for plugging holes up to what size? **(3) 3 inches by 3 inches**

A7. It is best to wrap a plug with lightweight cloth before inserting it because the cloth keeps the plug in place and fills gaps between plugs. **(1) True**

A8. What type of patches are effective for use over holes that have jagged edges projecting inboard? **(4) Box**

A9. Which of the following woods are best to use for the construction of shores? **(3) Douglas fir and yellow pine**

A10. A shore is a portable beam, a wedge is a block, triangular on the sides and rectangular on the butt end, and a shole is a flat block that may be placed under the end of a shore to distribute pressure. **(1) True**

A11. A strongback is a bar or beam of wood or metal that is used to distribute pressure or to serve as an anchor for a patch. The strongback is often shorter than a shore. **(1) True**

A12. What is the fully extended load for the model 6-11 steel adjustable shore? **(4) 6,000 pounds**

A13. A steel wedge is considered more valuable as a prying tool than for actual shoring. **(1) True**

A14. The most rapid and accurate way to measure a shore for cutting is to use an adjustable shoring batten. **(1) True**

A15. Which of the following types of equipment are available on the ship in case a space is inaccessible due to damaged doors, hatches, and/or scuttles? **(4) The Portable Hydraulic Access and Rescue System (PHARS) and the Portable Exothermic Cutting Unit (PECU)**

A16. PHARS can be utilized in emergency access, personnel rescue, or fire-fighting operations involving spreading, cutting, pulling, and piercing light plate or sheet metal. **(1) True**

A17. The PECU utilizes expendable cutting rods, which operate on the exothermic torch principle. **(1) True**

A18. What is the maximum pounds of pressure a jubilee patch can resist? **(1) 100 pounds**

A19. What is the maximum pounds of pressure a soft patch can resist? **(3) 150 pounds**

A20. When casualty power cables are rigged, the connections must always be made from the load to the supply to avoid handling energized cables. **(1) True**

A21. Which of the following machinery can NOT be supplied by the casualty power system? **(4) Main boiler plants**

CHAPTER 9

CHEMICAL AND BIOLOGICAL WARFARE DEFENSE

Learning Objectives: Recall the elements required for chemical warfare (CW) and biological warfare (BW) defense and countermeasures.

Nuclear weapons are primarily designed to destroy material by blast and shock. Biological and chemical substances for military use are primarily antipersonnel agents; they are intended to produce casualties without the destruction of buildings, ships, or equipment. This chapter provides an overview of shipboard chemical warfare (CW) and biological warfare (BW) defense and countermeasures. Detailed information on these subjects is available in the *Naval Ships' Technical Manual (NSTM),* chapter 470, "Shipboard BW/CW Defense and Countermeasures."

Chemical biological (CB) warfare defense is not a function that a ship performs in isolation from other tasks. A ship is expected to operate in hazardous environments including a variety of toxic environments. A chemical or biological environment should be viewed as a potential overlay on any warfare task. The employment of defensive measure may impair the ability of a ship to perform its assigned mission.

CB WARFARE DEFENSE PROTECTIVE EQUIPMENT

Learning Objective: Recall the function and use of protective equipment designed for CB warfare defense.

The employment of most CB countermeasures and protective equipment makes normal activities and operational evolutions more difficult. The use or even the threat of use of chemical or biological weapons may force the ship into a protective posture that degrades its operational capabilities. In some situations, the risk of chemical or biological casualties must be accepted to permit accomplishment of a high priority mission, but this risk should always be minimized. Risk management is basically making informed tradeoffs. It is important to understand not only the capabilities of chemical and biological agents and weapons but their limitations as well. This knowledge provides the ability to make informed decisions about the level of protection required. Protective measures can then be limited to those that are necessary and their use can be suspended as soon as possible. In this way, the negative impact on operational capability by the use of CB protective equipment can be minimized.

MCU-2/P SERIES PROTECTIVE MASK

A primary means of defense against CB agents is the protective mask. The MCU-2/P series mask (fig. 9-1) is designed to protect the face, eyes, and the respiratory tract of the user from tactical concentrations of chemical and biological agents, toxins, and radioactive fallout particles. It has a single filter and two voicemitters, one on front of the mask for speaking directly into a telephone or radio handset and one at the side to allow personnel nearby to hear. A nosecup with two inlet valves fits over the nose and mouth. It directs incoming air across the inside of the lens to reduce fogging. The mask has a drinking tube that connects to a canteen with an M1 cap. Since the MCU-2/P protective mask is available in three sizes, it is important to determine which size will provide the best fit and the maximum protection to an individual. To simplify mask size selection and initial sizing, use a caliper to measure face length (tip of chin to nasal root depression) according to instructions contained in the MCU-2/P manual.

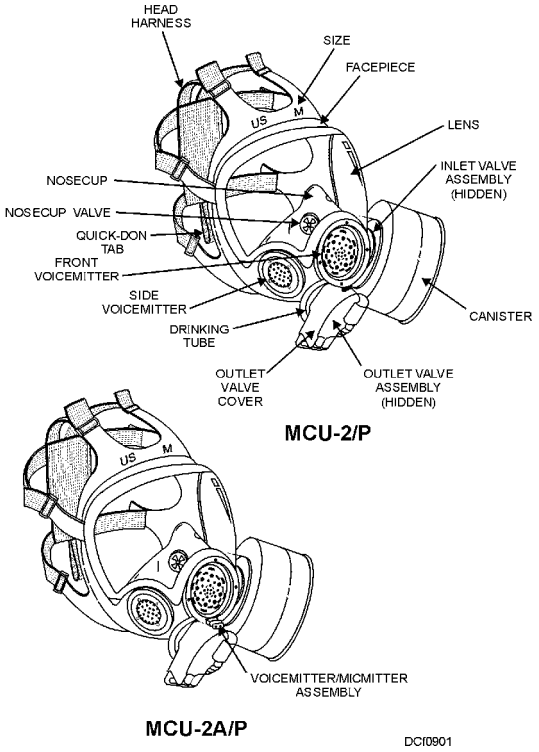

Figure 9-1. MCU-2/P and MCU-2A/P protective masks.

Checking and Testing the Protective Mask

When a protective mask is donned, a visual check should be made to ensure the mask fits properly. Things to check for are as follows:

- The facepiece should come well up on the forehead, but not extend over the hairline.
- The straps should not cut into the ears.
- The bottom part of facepiece should not cut into the throat.
- The nose cup should not interfere with vision or press painfully on the nose.
- For persons wearing combat spectacles, there should be no interference between the nose cup and the bridge of the spectacles.

After ensuring a good fit, perform a negative pressure check by covering the canister air inlet opening with the palm of your hand and inhaling lightly to deflect the facepiece and lens slightly inward. Then hold your breath for 5 to 10 seconds to determine if the facepiece and lens remain in the deflected position. If the lens does not deflect, this may be due to leaks around the edge of the mask caused by poor adjustment or incorrect size. It is important to determine the cause of the leak and correct it immediately.

Donning Procedures

Before donning a mask, you should replace unapproved eyeglasses and contact lenses with authorized combat spectacles. Once done, the donning procedure described here can begin. The steps of this procedure are as follows:

1. Stop breathing.
2. Close eyes tightly.
3. Remove headgear.
4. Open mask carrier.

CAUTION

Do not remove the mask from the carrier by pulling on the outlet valve.

5. Grasp the mask by the front portion of the facepiece in the area of the voicemitter and outlet valve assembly.
6. Withdraw the mask from the carrier.
7. Hold the outlet valve assembly in the palm of one hand. Using your free hand, push forehead hair aside.
8. Place the mask on your face forcing the chin cup very tightly against your chin.
9. Pull the head harness over your head using the quick-don tab.
10. Grasp a neck strap in each hand and tighten with small, jerking motions.
11. EXHALE.
12. Open your eyes and remove the outsert if required by command policy and place it in the carrier.

CAUTION

If inhalation is too forceful while checking for leaks, the facepiece will collapse against the face and the outlet valve may become dislodged.

13. Press the palm of one hand over the canister opening. Inhale to determine if an airtight seal of the mask against your face has been obtained.

CAUTION

If the mask collapses slightly while inhaling and remains collapsed while holding your breath, it is leak-tight. If the mask does not collapse, check for hair or other material between the mask seal and your face. Tighten straps if necessary and recheck.

14. After a proper seal is obtained, open your eyes and RESUME NORMAL BREATHING.
15. Close the carrier.

Doffing Procedures

Following proper procedures for doffing a mask is very important for your safety. The following procedures apply to masks that have not been exposed to contamination or, if they have been exposed, have been decontaminated.

1. Loosen the mask neck straps by rotating the buckles forward.

2. Grasp the mask by the outlet valve body and remove it by pulling down, outward and up.
3. Install the outsert, if necessary.
4. Reverse the head harness over the mask facepiece and remove moisture from inside the mask.
5. Clean and dry the mask according to current PMS requirements.
6. Stow the mask in the mask carrier.

Outserts

Clear plastic outserts that fit over the mask lens can serve two purposes. They protect the lens from scratches when they are stored in the carrier and they protect the lens from chemical agent droplets, oil, and other petroleum products when the mask is worn. Outserts shall be used on masks when they are stowed in carriers.

NOTE

Use of outserts when masks are worn is subject to command policy.

C2 Canister

The MCU-2/P series protective mask uses a single filter canister, designated C2.

This canister has a NATO standard thread and screws into the inlet valve body. In the initial configuration, the canister is on the left side of the mask; however, it can be moved to the right side by switching the locations of the inlet valve body and the side voicemitter.

Two canisters are issued with the mask and the ship issues a third. Two shallremain sealed in their packaging and reserved for wartime use. The third is attached to the mask for training and acclimation. Sixty days after a canister is removed from its packaging, it is marked as a training canister.

The C2 canister has an operational service life, based on a worst-case environment (hot climate and high humidity) as follows:

In the absence of a CB agent, shipboard personnel can retain canisters for operational use for 60 days after the seal is removed from the packaging. Canisters open for more than 60 days shall be retained for training only or discarded. A white stripe is painted around the rim of each to identify training canisters.

Canisters are good for one attack of blood agent, after which they shall be replaced. Canisters are good for 30 days following exposure to other chemical threat agents, as long as the 60-day limit after removal of the packaging seal is not exceeded.

Canisters should be replaced when certain conditions exist. These conditions include the following:

1. The charcoal is wet.
2. The canister has been damaged.
3. The canister is clogged and causes excessive breathing resistance.
4. The charcoal dust is left on your face after use.
5. The replacement is directed by the commanding officer.

NOTE

The guidance in this paragraph does not apply to canister replacement on masks issued for use in response to radiological casualties associated with the Naval Nuclear Propulsion Program.

Combat Spectacles

Combat spectacles are available in two sizes for use with the MCU-2/P series mask. The medical department is responsible for ordering and issuing combat spectacles.

WARNING

Combat spectacles are the only eyeglasses approved for use with the MCU-2/P series mask. Contact lenses will NOT be worn.

Canteen

A 1-quart canteen is used when aboard ship. The drinking tube of the MCU-2/P series mask attaches to the M1 cap on the canteen. The cap contains a pin that depresses a diaphragm on the end of the drinking tube, allowing the wearer to replenish fluids while wearing the mask. Covers and belts for carrying the canteens may be ordered separately.

MCU-2A/P PROTECTIVE MASK

The latest variant in the MCU-2/P mask series is the MCU-2A/P mask (fig. 9-1). It contains the same features as the MCU-2/P mask and, with modifications, may be integrated into the ship's Interior Voice Communications System (IVCS) and the Flight Deck Communications System. The priority for issue of MCU-2A/P masks is as follows:

1. Flight deck supervisory personnel
2. Personnel at general quarters (GQ) stations outside collective protection system (CPS) Total Protection (TP) zones who require access to IVCS
3. Remaining flight deck personnel
4. Personnel at GQ stations inside of CPS TP zones who require access to IVCS

CHEMICAL PROTECTIVE OVERGARMENT

The chemical protective overgarment (CPO) is made of material that is permeable to water vapor; that is, it allows the escape of moisture from perspiration. This design reduces heat stress on the wearer but will not prevent it entirely in a hot climate.

The function of the CPO is to protect the wearer from threat levels of chemical agents in liquid form and from the associated vapor. The inner antigas layer contains activated charcoal to entrap chemical agent vapors. The outer layer that is made of modacrylic nylon repels an unthickened chemical agent or spreads the agent over a wider surface area. This spreading process is called wicking. It enhances the evaporation of the liquid agent so less of it is absorbed and reaches the inner antigas layer. Thickened agent will not spread very much, so it must be wiped off.

The chemical protective overgarment (CPO) consists of two pieces—a smock with an attached hood and trousers. The smock and trousers are generously cut to fit over the general duty uniform. The smock has a back gusset to allow freedom of movement. There is a large front flap pocket for storing Atropine Auto Injectors, Pralidoxime Chloride Auto Injectors (2 PAM-CL), Nerve Agent Pretreatment Pyridostigmine (NAPP), and the M291 Skin Decontamination Kit. The smock also has a sleeve patch for securing detector paper. The smock can be adjusted with hook and pile fasteners at the wrist and waist. The trousers have a front gusset for ease of fit and suspenders which cross the shoulders and tie in the front. Hook and pile fasteners are located at the waist and at the bottom of each leg for adjustment. The CPO comes in four sizes—small, medium, large, and extra-large. The wear time in a contaminated environment is 6 hours. In an uncontaminated environment, the CPO has a total cumulative wear time of 100 hours within 30 days after opening the protective packages in which it is issued.

The chemical protective ensemble (CPE), as shown in figure 9-2, consists of the CPO plus a protective mask, and a pair of boots and gloves.

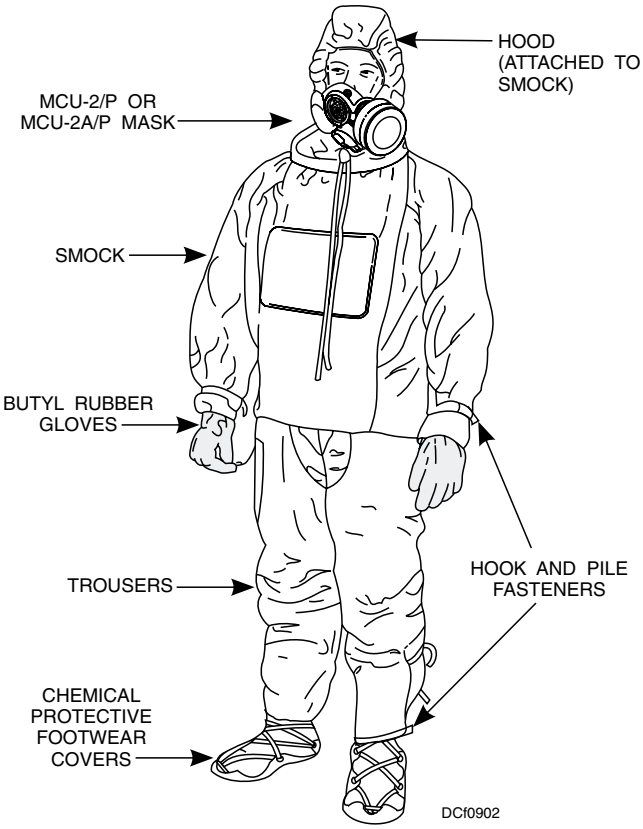

Figure 9-2. Chemical protective ensemble (CPE).

Advanced Chemical Protective Garment

The advanced chemical protective garment (ACPG) is an overgarment that is worn over the duty uniform or underwear. It is made of material that allows water vapor to escape. This design allows perspiration to pass through which reduces heat stress but does not eliminate it entirely in warm weather. The ACPG provides protection against chemical agents in liquid, vapor, and aerosol form. Details of the ACPG are covered in *NSTM,* chapter 470.

NOTE

The advanced chemical protective garment (ACPG) will be phased in to replace the CPO over several years. Issue and use of the CPO will continue until stocks are exhausted and shelf life has expired.

REVIEW QUESTIONS

Q1. The MCU-2/P protective mask comes in a total of how many sizes?

1. One
2. Two
3. Three
4. Four

Q2. What is the minimum number of C2 canisters issued with a MCU2/P protective mask?

1. One
2. Two
3. Three
4. Four

Q3. What is the maximum life expectancy of a C2 canister when opened in a noncontaminated area?

1. 30 days
2. 60 days
3. 90 days
4. 120 days

Q4. What is the maximum life expectancy of a C2 canister in a contaminated environment?

1. 30 days
2. 60 days
3. 90 days
4. 120 days

CHEMICAL OPERATIONS

Learning Objective: Recall the methods used for dissemination of chemical agents, the characteristics of the various agents and their effect on personnel, the devices used for detection of chemical agents, and the capability of each device.

In chemical operations, toxic chemical agents produce death, injury, or irritating effects. Although chemical agents are frequently referred to as gases, they may actually be found as solid particles, liquids, or gases. Chemical agents are used chiefly for their effects on personnel. Some agents have corrosive effects on certain materials, and incendiary agents will burn most materials. Chemical agents produce harmful physiological reactions when applied to the body externally, inhaled, or swallowed. Most military chemical agents cause disorganization of the functioning of the body.

Chemical agents can be disseminated by aircraft spray, chemical projectiles, chemical bombs, chemical grenades, smoke pots, smoke candles, chemical land mines, and missiles. These principal factors determine the method by which a chemical agent is spread, the quantity of the agent required to accomplish specific objectives, the nature of the agent being used, the distance to the place of attack, and the speed with which the agent must be used.

CHARACTERISTICS AND EFFECTS OF CHEMICAL AGENTS

The characteristics and some of the general physiological effects of the more common chemical agents are discussed in this section. This knowledge is very important in allowing personnel to react quickly and accurately should a chemical attack occur.

The rate of action of a chemical agent is the rate at which a body reacts to or is affected by that agent. There is a wide variation in the rate of reaction to the toxic chemical agents, even to those of similar tactical or physiological classifications. For example, distilled mustard (HD) produces no immediate sensation, and 4 to 6 hours may pass before the skin reddens. Lewisite (L), on the other hand, causes immediate pain, and the skin begins to redden within 30 minutes.

Blister agents must be decontaminated within 1 to 2 minutes after exposure if serious effects are to be prevented. Nerve agents and blood agents act quickly. If death is to be averted, you should administer antidotes or start other first-aid measures within 30 seconds after the symptoms appear. Vomiting and tear agents also take effect within a short time after being inhaled.

Some agents are effective when absorbed through the skin or eyes, but others must be inhaled. Tear agent (CN) primarily affects the eyes; tear agent (CS) affects both the eyes and the upper respiratory tract. Blister agents affect the internal as well as the external body surfaces. Vomiting agent adamsite (DM) and choking agent phosgene (CG) must enter the lungs to produce their effects.

The rate of detoxification is the rate at which the body counteracts the effects of a chemical agent. It is an important factor in determining the hazards of repeated exposure to sublethal doses of toxic chemical agents. Some agents are detoxified quite rapidly. Other agents are detoxified very slowly, and their effects are cumulative. The blood agents cyanogen chloride (CK) and hydrogen cyanide (AC) are detoxified rapidly, thus requiring high concentration for maximum casualties. The nerve agent sarin (GB) is detoxified slowly and is cumulative to a large degree. If 50 percent of a lethal dose is received, only minor symptoms appear. However, another 50 percent received within the next few hours may cause death if no treatment is received. The blister agent distilled mustard (HD) and the choking agent phosgene (CG) also are cumulative. A 10-minute exposure to either followed a few hours later by a similar exposure has the same effect as one 20-minute exposure. Additionally, repeated exposure to sublethal doses of HD can result in sensitivity to low concentrations of the agent.

Nerve Agents

Nerve agents are not quickly and easily detected. Small quantities can cause casualties and deaths quickly. They may be colorless gases with little or no odor or colorless to light brown liquids. These agents radically disturb the chemical processes of the nervous system, which impairs or stops other bodily functions.

Nerve agents can enter the body by inhalation, ingestion, and absorption through the skin and eyes. Entry through the skin is extremely effective. This means that the protective mask alone is not adequate protection because the agent can enter through any exposed skin.

There are now two series or groups of nerve agents—G series and V series.

The G series agents include the following:

- Tabun (GA)
- Sarin (GB)
- Soman (GD)

The V series is composed of agent VX.

The physical properties of the G agents are similar and are as follows:

- The GA is a colorless to brownish liquid, which gives off a colorless vapor.
- GB and GD are both colorless to light brown liquids that give off colorless vapors.
- All three G agents normally are nonpersistent; however, GA and GD are longer lived than GB.

G agent poisoning displays approximately the same sequence of symptoms whether the agent enters the body by inhalation, absorption, or ingestion. These symptoms, in usual order of appearance, are as follows:

1. Runny nose
2. Tightness of chest
3. Dimness of vision and pinpointing of the eye pupils; difficulty in breathing
4. Drooling
5. Excessive sweating
6. Nausea
7. Vomiting
8. Cramps
9. Involuntary defecation and urination
10. Twitching, jerking, and staggering
11. Headache and confusion
12. Drowsiness
13. Coma
14. Convulsion

All of the above symptoms can take place in 30 seconds if the dose is sufficiently heavy. These symptoms are followed by cessation of breathing, then death. Symptoms appear much more slowly from skin dosage than from respiratory dosage. Although skin absorption great enough to cause death may occur in 1 to 2 minutes, death may be delayed for 1 to 2 hours. Respiratory lethal dosages kill in 1 to 10 minutes, and liquid in the eyes kills almost as rapidly. The number and severity of symptoms that appear depend on the quantity and rate of entry of the nerve agent into the body.

Most of the detailed information about agent VX is classified and cannot be covered in this text. In general, V agents are colorless and odorless liquids that do not evaporate rapidly or freeze at very low temperatures. Because of their low volatility, their vapor effect is limited; thus, the duration of their effectiveness is increased. In liquid or aerosol form, V agents affect the body in a manner similar to that of the G agents. The V agents usually are disseminated as liquid droplets. When inhaled, these agents are inherently about five times as toxic as the older nerve agents (G series). When absorbed through the skin, the V series agents are several hundred times more toxic than the G agents, because there is no breakdown of the V agent (as there is in GB) as it passes through the fatty layer of the skin.

Blister Agents

The blister agents, used for casualty effect, may restrict the use of ground personnel, slow troop movements, and hamper the use of material or installations. These agents affect the eyes and lungs and blister the skin, producing long-term incapacitation or death. Blister agents are odorless and vary in duration of effectiveness. Most blister agents are insidious in action; there is little or no pain at the time of exposure (except to lewisite (L) and phosgene oxime (CX), which cause immediate pain on contact). The development of casualties is somewhat delayed; the effects of distilled mustard (HD) may appear in 4 to 6 hours after exposure. The first effect is eye irritation. Next, the more sensitive body parts are affected. A series of symptoms follow, ranging from slight redness to blistering and the forming of ulcers. Wet skin absorbs more mustard than dry skin. For this reason, lower concentrations of mustard HD are needed in hot, humid weather because the body is then moist with perspiration. This fact is important in the tropics. Protection from blister agents is extremely difficult, because they attack any part of the body that comes in contact with the liquid or vapor agent.

The primary blister agents, HD and HN, are most effective for general use. However, they are far less effective than the nerve agents for casualties that result in quick death from inhalation are, because a high dosage of mustard vapor is required to produce death. Mustard is effective by absorption of both vapor and liquid through the skin. The physiological action is localized to the area of the skin that is contaminated, but it does not produce a systemic effect.

In the pure state, mustard is a yellowish, oily liquid. Because of its high boiling point, liquid mustard evaporates slowly at normal temperatures; consequently, it remains effective for a considerable length of time after application. In fact, in winter months, HD may produce casualties for several weeks after dissemination. On the other hand, the warm temperatures of summer, assisted by wind and rain, may reduce its capability to days. Almost every shipboard surface or material, except bright metal and glass, absorbs some mustard and retains it more or less persistently. Regardless of weather and wind, no shipboard surface contaminated with mustard should be considered completely free of this agent unless a negative test is obtained with a detector kit.

Because HD can be dissolved by fats, it may be dissolved in foodstuffs and make them poisonous. Mustard can be dissolved easily in such commercial solvents as benzene and cleaning fluid, and in motor oils, but it is only slightly soluble in water. On prolonged standing, it reacts with water to produce harmless substances. The action of HD on metal is very slight.

The newer blister agents include the nitrogen mustards HN-1, HN-2, HN-3 and the mixed blister agent HL. These mixtures do not produce more severe injuries than do other agents alone, but they have a lower freezing point than pure HD.

Blood Agents

Blood agents enter the body through the respiratory tract. They affect bodily functions through action on the enzyme cytochrome oxidase, thus preventing the normal transfer of oxygen from blood to body tissue. Most blood agents act rapidly and are normally nonpersistent. In general, a victim who does not die quickly will recover within a few hours.

The most common blood agents are as follows:

- Hydrogen cyanide (AC)
- Cyanogen chloride (CK)

Although AC is one of the most deadly poisons known, it is one of the least effective chemical agents because it evaporates rapidly. The vapors are less dense than air. They do not provide a blanket of the agent, and the poisoning effects do not accumulate as exposure continues. CK deteriorates the chemical canisters in protective masks within a short period of time.

Choking Agents

Choking agents, sometimes called lung irritants, primarily injure the respiratory tract which includes the nose, the throat, and particularly the lungs where it causes pulmonary edema. In extreme cases, membranes swell, lungs become filled with liquid, and death results from lack of oxygen; thus, these agents choke an unprotected man. Fatalities of this type are known as "dry-land drownings."

The two most common choking agents are as follows:

- Phosgene (CG)
- Diphosgene (DP)

Use of these agents is rather limited because they react rapidly with water to yield nontoxic hydrolysis products. Their concentrations in air are reduced fairly rapidly by water condensates (rain and fog) and by dense vegetation. Other classes of agents are much more efficient. Unlike the nerve and blister agents, choking agents have no poisonous effect upon foods; they are too readily destroyed.

Vomiting Agents

The most important vomiting agents are as follows:

- Diphenylchlorarsine (DA)
- Diphenylchanoarsine (DC)
- Adamsite (DM)

These agents are dispersed as aerosols and produce their effects by inhalation. These agents produce minor eye irritation and a feeling of pain and sense of fullness in the nose and sinuses. This is accompanied by a severe headache, intense burning in the throat, tightness and pain in the chest, and irritation of the eyes, producing excessive tear formation. Coughing is uncontrollable and sneezing is violent and persistent. Nausea and vomiting are prominent. Mild symptoms, caused by exposure to very low concentrations, resemble those of a severe cold. The onset of symptoms may be delayed for several minutes after initial exposure, especially with DM. Therefore, effective exposure may occur before the presence of the smoke is suspected. If the protective mask is then put on, symptoms will increase for several minutes, despite adequate protection. As a consequence, the victim may believe the mask to be ineffective, and by removing it cause further exposure. On leaving the scene of the attack, the victim's symptoms subside rather rapidly, and the severe discomfort vanishes after about one-half hour. At high concentrations, effects may last for several hours. Because of their arsenical properties, these agents make foods poisonous.

Tear Agents

Tear agents (also known as riot-control agents) are essentially local irritants, which, in very low concentrations, act primarily on the eyes, causing intense pain and a considerable flow of tears; stinging of warm, moist skin; and irritation of the nose. High concentrations produce irritation of the upper respiratory tract and lungs and cause nausea and vomiting. The agents may be either solids or liquids and may be dispersed in the air as vapors or smokes.

Tear agents include the following:

- CN
- CNC
- CNB
- BBC
- CS

Of these agents, CS is the newest and most effective. It produces immediate effects even in extremely low concentrations. An individual is incapacitated about 20 to 60 seconds after exposure. Effects last 5 to 10 minutes after the affected individual is removed to fresh air. During this time, affected individuals are incapable of effective concerted action. This agent is highly successful in quelling riots.

The physiological effects of tear agents include the following:

- Extreme burning of the eyes accompanied by a heavy flow of tears
- Coughing, difficulty in breathing, and chest tightness
- Involuntary closing of the eyes
- Stinging sensation of moist skin

WARNING

Although personnel exposed to CS may shower as necessary, when CS dust or particles are on the skin, showering should be delayed for 6 hours to prevent stinging and reddening of the skin.

Incapacitating Agents

Incapacitating agents were developed through intensive study and research. They are used to wage and win a war without resorting to the massive killing, enormous destruction of property, and immense monetary cost, as in past wars, which undeniably will characterize any future conflict in which nuclear weapons are used. Incapacitating agents are the latest discovery. Many are still in the research, development, and testing stage; and much remains to be learned about them.

The effects of incapacitating agents are not predictable and may even change from dose to dose and person to person. During a single exposure, a person's feelings may range from impatience, restlessness, and anxiety to an exuberant sense of happiness. The person may suffer from delusions of persecution or grandeur. Some people may reach a catatonic state where they cannot move voluntarily and will hold any position in which placed. In this state, a person may suffer from hallucinations, panic, and make violent outbursts.

An agent of this type is BZ, a slow-acting aerosol. It enters the body by inhalation and interferes with mental processes that control bodily functions.

Although there are many unanswered questions concerning the physiological action of these incapacitating compounds and much research remains to be accomplished, they offer many advantages. Some of these advantages are as follows:

- They are flexible. The effects can be tailored to meet a commander's needs—ranging from drowsiness or mild hallucinations and confusion and lack of physical coordination to hysteria, irresponsibility, or complete withdrawal.
- They are economical. They are far less expensive to produce, pound for pound, than fissionable materials or even some of the more advanced conventional weapons.
- They are not destructive. An enemy nation subdued by the use of incapacitating agents against its armed forces and against its support services will not pose to the victors the mammoth problems of reconstruction and rehabilitation. Factories will remain standing; cities will still be alive.
- They are less injurious. Properly employed, these agents are likely to cause far less loss of life, less maiming or crippling, and less permanent aftereffects than has been true of high explosives used in past conflicts.
- They are simpler weapons system. Agents of this type are easily stored, loaded into munitions, and delivered on target. They may be projected from generators upwind of the enemy as an aerosol; they may be introduced clandestinely into his food and water supplies; or they may be injected by one well-placed agent into the ventilating systems of large headquarters.
- They are difficult to detect. Most agents of this type are colorless, odorless, tasteless, and produce no immediate recognizable physiological symptoms. Sprays can be made to resemble obscuring smoke; artillery shells can be designed that display the same burst characteristics as HE rounds.

Effective personal protective measures can be adopted with incapacitating agents as with other chemicals—the protective mask, protective clothing, highly sensitive alarms, or detectors.

Toxins

Toxins are poisonous products of animal or vegetable cells. When injected into animals or people, they cause the formation of antibodies called antitoxins. The most important toxins are those produced by bacteria, the most potent of which is botulin. Botulin is hundreds of times more poisonous than phosgene, mustard gas, or cyanide, and it is several times more toxic than rattlesnake or cobra venom. Toxins can be used in two ways—they can be produced outside the body and introduced into food, water, or wounds, or the organisms producing them can be used as agents. In peacetime, control is exercised over diseases of this group by strict sanitary measures and thorough medical inspection of all foods prescribed by the Food and Drug Administration.

Incendiaries

Incendiary weapons, unlike other chemical agents, are concerned primarily with material damage, rather than with inflicting casualties. Incendiaries have been used against personnel. However, their greatest application is in the destruction of industrial installations, housing, ammunition, fuel dumps, and so on. Modern military incendiaries may be divided into three categories—oil, metal, and a combination of oil and metal. They may also be divided into spontaneously flammable materials, such as

Table 9-1. Chemical Agent Detection Capabilities

IDENTIFIER SYMBOLS	TYPE AGENTS	CHEMICAL AGENT NAME	*M8 PAPER	*M9 PAPER	M256	** M18A2	CWDD	CAPD
GA	Nerve	Tabun		X	X	X	X	X
GB	Nerve	Sarin	X	X	X	X	X	X
GD	Nerve	Soman	X	X	X	X	X	X
VX	Nerve	Unknown	X	X	X	X	X	X
AC	Blood	Hydrogen cyanide		X	X	X		
CK	Blood	Cyanogen chloride			X	X		
CX	Blister	Phosgene oxime		X	X	X		
ED	Blister	Ethyldichloroarsine		X	X			
HD	Blister	Distilled mustard	X	X	X			
HL	Blister	Mustard-lewisite mixture	X	X	X			
HN1	Blister	Nitrogen mustard	X	X	X			
HN2	Blister	Nitrogen mustard	X	X	X			
HN3	Blister	Nitrogen mustard	X	X	X			
HT	Blister	Mustard Mixture	X	X	X			
L	Blister	Lewisite	X	X				
MD	Blister	Methyldichloroarsine		X	X			
PD	Blister	Phenyldichloroarsine		X	X			
T2	Nerve							
HT-2	Blood/Blister	Trichothescenes			X			
CG	Choking	Phosgene			X	X		

*Will detect all agents in liquid form only.
**For EOD—May be aboard ship.

phosphorous, and those agents requiring ignition, such as magnesium.

DETECTION OF CHEMICAL AGENTS

Various devices are available to detect and identify chemical agents. Table 9-1 provides a list of chemical agents and identifies which chemical detection device can detect each of the agents. Most of the devices indicate the presence of chemical agents by color changes that are chemically produced.

Some of the detection devices used by the Navy are as follows:

- M-8 Chemical Agent Detection Paper
- M-9 Chemical Agent Detection Paper
- M256A1 Chemical Agent Detector Kit
- Chemical Warfare Directional Detector (CWDD) AN/KAS-l
- Chemical Agent Point Detector System (CAPDS)

M-8 Paper

The M-8 chemical agent detection paper (fig. 9-3) is issued in a book of 25 split sheets (50 separate responses). It is chemically treated, dye impregnated, and perforated for easy removal. This paper detects the presence of liquid V agents, G agents (nerve), and H agents (blister/mustard). When the M-8 paper is brought in contact with the suspected chemical agent, the chemicals in the paper react with the agent to produce specific color changes. The sheet of paper is then matched to the color comparison chart printed on the inside front cover of the M-8 book. Liquid droplets as small as 125-200 microns will produce a color change that is detectable by the naked eye. Response time is approximately 20 seconds.

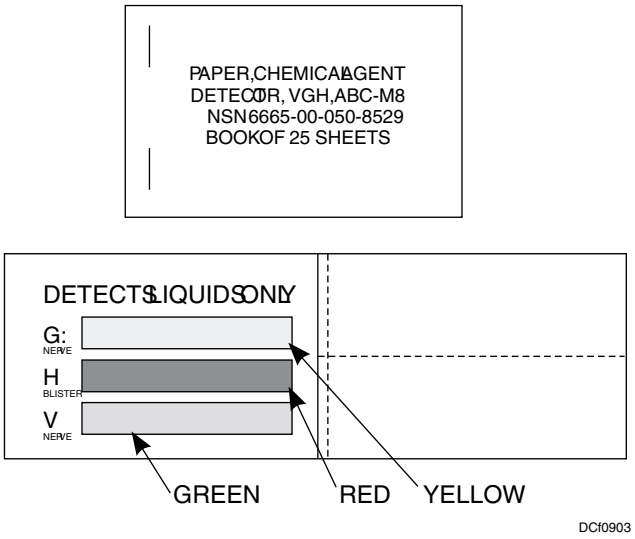

Figure 9-3. M-8 detector paper.

NOTE

Certain agents give a red-brown color response, which is inter- mediate between the typical H and the typical G colors.

The steps of the procedure for using M-8 paper is as follows:

1. Detach a sheet of detector paper from the book and attach it to your clothing, or place it on a surface so that it can be exposed to drops or liquid splash of chemical agents. Use masking tape or any other available means to secure the paper in place.

2. If colored spots appear, put on your protective mask. Be prepared to take proper medical action if symptoms appear.

3. Compare the colored spots with the colors on the inside cover of the detector paper book to determine what type of agent is present.

4. The paper may also be used to detect liquid contamination by placing the paper in contact with the suspect surface. A color change similar to that shown on the inside cover indicates the presence of chemical agents. This paper will NOT detect gases or vapors.

M-9 Paper

The new M-9 (fig. 9-4) detector paper detects nerve agents (G and V) and blister agents (H and L) in the liquid state. The paper is sensitive to droplets as small as 100 microns and responds in approximately 10 seconds or less. The response time increases at temperatures below freezing. High temperatures of 160°F or above may cause a red color to appear, thus producing a false reading. The use of the M-9 detector paper is limited to agents in the liquid state; it will not detect chemical agent vapors. The M-9 detector paper has no agent specificity; the red color appears for all detectable agents.

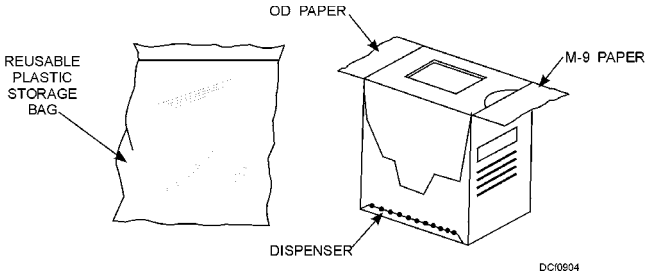

Figure 9-4. M-9 detector paper and storage bag.

The M-9 liquid-agent detector paper is issued by the roll and is 30 feet long and 2 inches wide. It has a Mylar film backing that has adhesive and release paper on the reverse side. The roll comes in a cardboard dispenser that has a serrated metal edge for cutting. A moistureproof, resealable bag is provided for storing the dispenser after it is removed from its original shipping package.

When you open the shipping package, remove the dispenser and the plastic storage bag. Save the plastic storage bag and discard the shipping package. Immediately write or stamp the current date on the

dispenser. This date will be the base line to determine the useful life of the M-9 detector paper. Remove the cutter edge protector and throw the protector away.

The steps of the procedure for removing M-9 detector paper from the dispenser are as follows:

1. Start the olive drab (OD) paper strip through the slot by applying a little finger pressure with the thumb or finger.

2. Hold the detector paper strip between the forefinger and thumb of one hand and the OD paper strip between the forefinger and thumb of the other hand. Pull enough of the detector paper out through the slots for the intended use. Be sure to pull the detector paper strip and the OD paper strip at the same time.

3. After you pull both of the paper strips through the slots, cut the detector paper half way by pulling the strip down on the cutting edge.

4. Lift the detector paper strip up off the cutting edge, and then pull both of the strips out a little further, about 1 inch.

5. Tear through the remaining half of the detector paper strip.

6. Tear off the OD paper strip, but leave enough paper sticking out to be ready for your next use.

Attach detector paper to equipment and bulkheads at locations where it can be seen easily. Wrap the detector paper around some part of the equipment where it will not get stepped on. To help make it easier to remove the detector paper, fold 1 inch of the paper back over (adhesive side to adhesive side) to form a tab. Remember to keep the paper away from hot surfaces and direct sunlight. Heat may cause the detector paper to turn red and cause false readings.

To attach the detector paper to flat surfaces, you first place the paper on the surface. Then, cover the detector paper with the OD paper strip and press the detector paper into date. Be sure to make a tab, as mentioned above, to help make it easy to remove the detector paper when required.

To check the surface of an area for liquid chemical agent contamination, take a piece of the detector paper and blot the surface around the suspected contaminated area. Do not rub or scrape the detector paper across rough surfaces. Scuff marks will cause false readings. If spots on the paper appear pink, red, red-brown, red-purple, or any shade of red, take protective actions and assume that you have been exposed to a liquid chemical agent.

Do not check the detector paper under a red light because you will not be able to see the red spots of the liquid chemical agent. Personnel who are color-blind should not check the detector paper for red spots. Blue, yellow, green, gray, or black spots are caused by humidity, not by liquid chemical agents.

Detector paper strips that show false positive readings need to be replaced with a fresh strip. False positive readings can be caused by the following factors:

- Temperatures above 125°F
- Scuffs
- Cleaning compounds
- DS-2 decontaminating agent
- Gasoline
- Grease
- Hydraulic fluid and brake fluid
- Insect repellent/spray
- Lubricating oil
- Ethylene glycol (pure antifreeze)

The M-9 detector paper will work in rain, snow, and sleet. However, the reaction to agents is slower when the detector paper is soaked. When the surfaces are wet, attach the detector paper tighter than usual to prevent it from slipping. Also, temperatures around 32°F reduce the speed in which the paper will turn red and it may take the paper several minutes to show a color change.

When the dispenser is not in use, place it in the plastic storage bag to prevent contamination of the detector paper. Squeeze out the air before sealing the plastic storage bag. If the discard date or the useful life date has passed, replace the detector paper with a new, unopened roll.

M256A1 Chemical Agent Detector Kit

The M256A1 chemical agent detector (fig. 9-5) is a portable, expendable item that consists of a carrying case with straps, 12 sampler-detectors, one book of M-8 paper, and a set of operational instruction cards. You will use the sampler-detectors to test for chemical agents in the vapor form. The M-8 paper is used to check for chemical agents in the liquid form.

The 12 sampler-detectors are individually wrapped. Each sampler-detector consists of eight glass ampoules (each filled with chemical reagent),

three test spots, a chemical heater, protective strips, and tabs. Each sampler-detector has instructions for its use printed on the outside of its protective bag. Formed channels in the plastic sheets direct the flow of the reagents from the finger-crushable ampoules to wet the test spots at the time of testing. SAFE/DANGER observations are printed on each sampler-detector. They show the approximate color that each spot develops if the agent is present and if it is absent.

The square test spot is used with the blister reagent ampoules and the chemical heater to detect mustards (H and HD) and phosgene oxime (CX). The lewisite detecting tablet and the lewisite tablet-rubbing tab are used to detect lewisite (L). A pull-tab covers the lewisite detecting tablet.

The circular test spot is used with the blood reagent ampoules to detect hydrogen cyanide (AC) and cyanogen chloride (CK).

The star-shaped test spot is used with the nerve reagent ampoules to detect nerve agents (V and G).

The hinged protective strip, used in the closed position, protects the blood and nerve agent test spots. The colored beads in the ampoules have no operational function. They are installed during manufacture of the sampler-detector as an aid in identifying the sampler ampoules.

One book of M-8 chemical agent detector paper is also included in the M256A1 kit. Use the M-8 paper as discussed earlier in the chemical agent detection paper section of this chapter. One set of operational instruction cards is attached to the case by a lanyard. These cards contain instructions on the use of the M256A1kit.

The M256A1 kit is a portable means for CBR monitoring teams to detect concentrations of nerve, blister, or blood agents to differentiate between classes

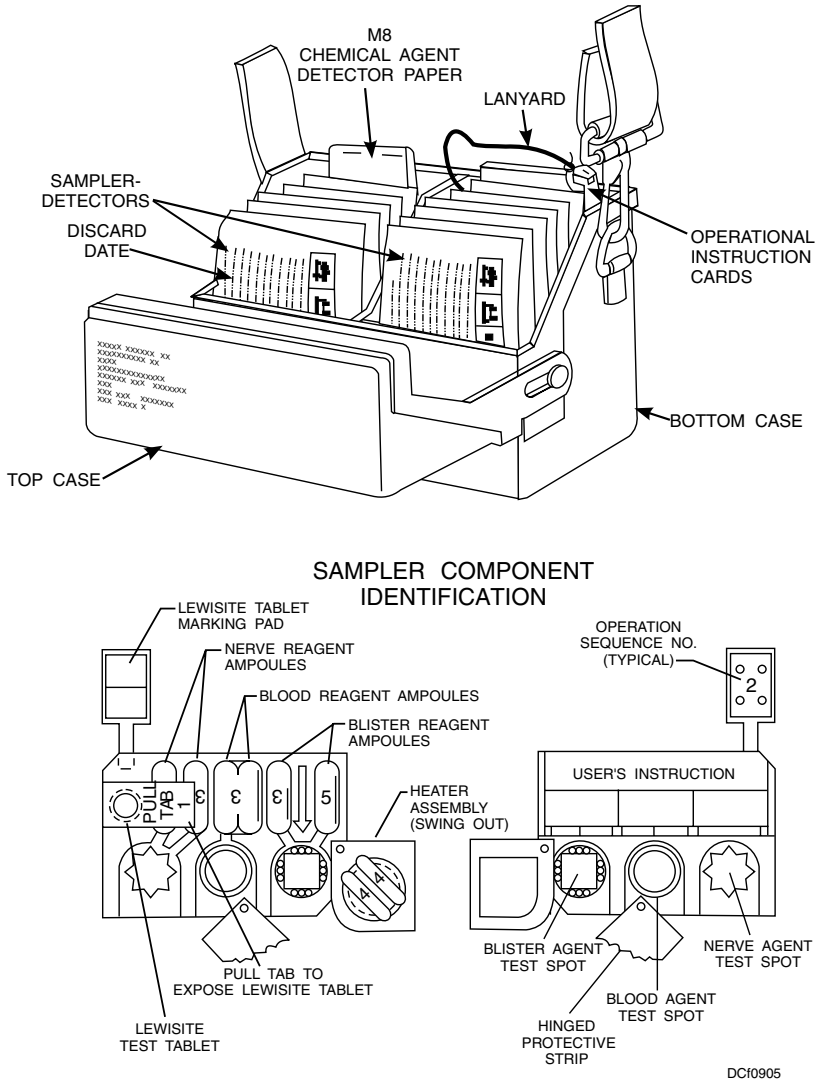

Figure 9-5. M256A1 chemical agent detector kit.

of agents and to help determine when it is safe to remove CBR protective masks and clothing.

When using the M256A1 kit to detect vapors in the air, you should use the following procedures:

1. Remove the three operational instruction cards from the kit. Read these instructions before proceeding.

2. Remove a sampler-detector from the kit. Check to ensure that it has not exceeded its discard expiration date. Do not use an outdated sampler-detector because it will not give you a reliable test indication.

3. Read the instructions on both sides of the protective bag before proceeding.

4. Open the sampler-detector bag by tearing the bag along the tear line that is marked with arrows. Hold the sampler-detector on the windward side from you to keep from picking up vapors from your protective equipment. Do not allow excessive moisture, such as rain and dew, to come in contact with the sampler-detector.

5. Carefully remove the sampler-detector from its protective bag. Save the protective bag to refer to the instructions that are printed on it. Do not touch the sampler-detector agent test spots because incorrect test results may be produced.

6. Handle the sampler-detector carefully. Hold it by the hinged protective strip in the closed position. Keep the protective strip in the closed position to protect the test spots.

7. Swing the hinged heater assembly away from the test spot and discard the two loose protective strips under the hinged heater assembly.

8. Pull off and discard the pull tab (marked 1) to expose the lewisite detecting tablet.

9. Rub the top half of the white paper side of the lewisite tablet-rubbing tab (marked 2) on the lewisite detecting tablet. Repeat the rubbing until a mark is visible.

10. Hold the sampler-detector in the vertical position so that the ampoules are down.

11. Crush the four reagent ampoules in the three center pockets (marked 3) with your finger.

12. Rotate the sampler-detector until the test spots are in a down position. Force the liquid from the four ampoules through the formed channels to the test spots to ensure wetting.

13. Check to ensure that the hinged protective strip is over the test spots. Hold the sampler-detector horizontal with the left thumb over the center test spot.

14. Make sure that the hinged heater assembly is away from the test spot. The heater produces hot vapors and is hot to the touch. Keep the sampler-detector away from your face and bare skin once the ampoules have been broken.

15. Crush one of the two green ampoules (marked 4) with your finger. Immediately swing the hinged heater assembly over the test spot. Vent the vapor away from your body. Leave the hinged heater assembly in place for 2 minutes.

16. Swing the hinged heater assembly and the hinged protective strip away from the test spot after the 2 minutes have passed.

17. Hold the sampler-detector by the hinged protective strip.

18. Expose the test spots to the air for 10 minutes while shielding the sampler-detector from direct sunlight.

19. Crush the second green ampoule (marked 4) with your finger. Swing the hinged heater assembly over the test spot, and vent the vapor away from you. Leave the hinged heater assembly in place for 1 minute.

20. Swing the hinged heater assembly away from the test spot after 1 minute has passed.

21. Hold the sampler-detector vertically with the test spots down.

22. Crush the remaining ampoules (marked 5) with your finger. Force the liquid from the two ampoules through the formed channels to the test spots to ensure wetting.

23. Rerub the lewisite-detecting tablet with the lewisite tablet rubbing tab. Make sure that the second rub mark is next to the first rub mark.

24. Immediately turn the sampler-detector over to determine whether safe or danger conditions exist. Observe the lewisite tablet rubbing tab for a difference in color between the two rub marks. Also, you can use the operational instruction cards to make a color comparison.

You can compare the blood agent and the lewisite tests immediately after the prescribed exposure time. The blister agents (H and CX) develop color immediately after all of the ampoules are broken. The nerve agent test requires a waiting period of 2 minutes.

Disregard the small blue areas under the plastic rim of the nerve agent spot. The blue coloring is caused by the humidity. The nerve spot may become difficult to wet with the solutions as the kit ages. You have to work the solutions to the spot carefully. At low concentrations, a change in the lewisite tablet rub mark may be very slight. Compare the first rub mark with the second rub mark before making a judgment. Yellow and orange colors sometimes occur on the blood test spot when no agent is present. A pink or blue color must be present for the test to be positive.

If the suspected surface contamination is in the form of a liquid, use the M-8 paper as discussed earlier. Keep the M256A1 kit stored in a cool, dry area when not in use. Be sure that the case is kept closed. Inspect the M256A1 kit completely before using to make sure you have all of the equipment needed. If any of the components are missing or the blood agent test spot is pinkish, do not use the sampler-detector.

AN/KAS-1 Chemical Warfare Directional Detector (CWDD)

The AN/KAS-1 chemical warfare directional detector (CWDD) system (fig. 9-6) is a passive, infrared imaging sensor. Its primary function is to provide U.S. Navy ships with the capability to detect and identify a chemical warfare (CW) agent attack. The AN/KAS-1 can be used to detect and identify nerve agent attacks against sister ships in a task force, against waves of amphibious assault ships and boats proceeding ashore, or against assault forces in the vicinity of the landing area. Chemical warfare agent cloud detection and identification can be accomplished against a sky background for all conditions under which CW attacks may be expected to occur. Detection of CW activity against a land background can be accomplished also, but less effectively.

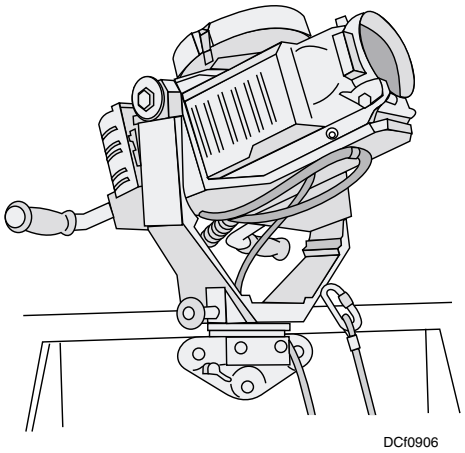

Figure 9-6. Chemical warfare directional detector (CWDD), AN/KAS-1.

The AN/KAS-1 infrared sensor gives the equipment a secondary function of low-visibility/night pilotage and area surveillance. The operator of the AN/KAS-1 can detect and provide relative bearing to prominent land features, such as lighthouses and water towers. In the future, the AN/KAS-1 may be approved for the detection of buoys and personnel on the surface of the water. The AN/KAS-1 is a shipboard mounted, portable unit. It consists of a sensor unit, a pivot mount, a power conversion unit (PCU), a carrying and stowage case, a maintenance kit, an overboard lanyard, and a foul weather cover.

The sensor unit is equipped with the following controls:

- A narrow field of view (NFOV).
- A range/focus knob.
- A brightness knob.
- A contrast knob.

A filter wheel switch. This switch allows you to rotate a wheel positioned in the optical chain of the unit through the following positions: filter 1, filter 2, filter 3, and filter out. This is referred to as interrogating. These filters are used to identify CW nerve agent clouds.

The pivot mount provides the mechanical interface between the sensor unit and the standard bracket and lock assembly. Handlebars are provided to assist you in positioning the sensor unit. The interconnecting cable provides electrical connection and power transfer from the PCU to the sensor unit through a coiled, double-shielded cable.

The power conversion unit provides operating energy to the sensor unit from the ship's 115-volt alternating current (vac) 60-Hertz (HZ) power supply. Press-to-test switches and lights are included to verify input and output voltages. The unit consists of an electronics tray contained in a watertight, protective housing.

The carrying and stowage case is provided for transportation and stowage of the AN/KAS-1 system. Space is also provided in this case for the stowage of the sensor unit, pivot mount, interconnecting cable, overboard lanyard, maintenance kit, and foul weather cover. The maintenance kit (stowed inside the carrying and stowage case) is provided with each system. The maintenance kit contains the following:

- Expendable nitrogen gas cartridges (six) to purge the sensor unit of moisture (30-day requirement)
- A purge kit regulator and connector assembly
- Lens wipers (cleaning pads)
- A lens cleaning solution
- Spare bulbs and lenses

The overboard lanyard is a vinyl-covered, stainless steel cable. It is used to secure the sensor and pivot mount unit to an eyelet on the PCU unit mounting plate before installation and/or removal. The overboard lanyard and associated safety procedures prevent accidental over-the-side loss or severe damage to the equipment, due to a fall to a lower deck, during installation or removal of the sensor unit.

The foul weather cover, or waterproof canvas, is used to protect the sensor and pivot mount when they are not in use. (Do not cover the sensor unit with the foul weather cover while the unit is in operation. The confined heat that is generated by the sensor unit cooler will harm the sensor unit.)

Use the following procedures to place the AN/KAS-1 in position for use.

1. Have two people carry the AN/KAS-1 stowage case to the mount site to be used.

2. Remove the free end of the overboard lanyard from the case and secure it to the eyelet in the PCU mount.

3. Have the people carefully remove the sensor unit from the case by grasping it by the yoke, and then lift and turn the pivot mount to line up with the locater pins in the bracket and lock assembly mount. Move the unit into place on the mount.

4. Secure the sensor unit to the mount by securing the lock mechanism on the bracket and lock assembly. Try to lift the sensor from the mount to ensure that it is locked in place.

5. Position the left and right handles by placing one hand on the sensor assembly for support. Pull out each handle, one at a time, and rotate each one into a horizontal position.

6. Notify the support maintenance signalman to purge the sensor unit according to the applicable MRC from the PMS.

7. Free the lens cover by releasing the two side latches. Remove the lens cover and secure it to the lens cover stowage mount on top of the sensor unit with the two side latches.

8. Verify that the PCU CB1 switch is off, and then connect the sensor unit power cable to the PCU connector.

After the AN/KAS-1 is set up, perform the AN/KAS-1 operator check procedure. Now the AN/KAS-1 system is ready to be aligned.

The steps of the procedure to set up the AN/KAS-1 for operation are as follows:

1. Remove the canvas foul weather cover.

2. Push the button flap on the cover into the cover. Roll the cover up and secure it with the drawstring. Ensure that the cover is secured by its strap to the mount eyebolt. This will prevent the equipment cover from being blown overboard.

3. Remove the lens guard cushion by releasing the two latches, one on each side. Secure the lens guard cushion to the top of the sensor unit using the same two latches.

4. Rotate the mount control handles 180° into the operational position.

5. Release the elevation stow pin and azimuth locks. Adjust the azimuth friction lock to the desired level of control.

6. Perform the AN/KAS-1 operator check procedure.

7. Check the sensor unit alignment with the alignment bench mark data engraved on the data plate. If necessary, perform the alignment procedure.

The AN/KAS-1 is now ready for operation.

To conduct the AN/KAS-1 operator check, turn on the PCU CB1 switch. The sensor unit cooler will operate. After about 3 minutes, the sensor will reach cool down and an IR scene should be visible in the eyepiece. If the IR scene is not visible or clear, the steps of the procedure to troubleshoot the problem are as follows:

1. Place the PCU S1 switch in the TEST position. If all lights come on but there is no IR scene visible in the eyepiece within 5 minutes, replace the sensor unit. If the DS3 fails to light up, the ship's power to the PCU is OFF. Check the ship's power. If the DS3 lights up but there is no image and either the DS1 or the DS2 fails to light up, replace the PCU. If some of the lights are out but the IR

scene is visible in the eyepiece, replace the defective lamp.

2. Adjust the BRT (brightness) and the CTRS (contrast) controls to obtain a good image. Remember this image, because on foggy or hazy days the image will not focus sharply. If you are in a low-visibility or heavy fog condition, use the narrow field of view and focus on a hot object within 50 feet of the sensor. If you are unable to obtain a good image, replace the sensor unit.

3. Using the narrow field of view, observe the hot object at 50 feet or more and adjust the image. Switch to the wide field of view and verify the focus. Always focus the AN/KAS-1 in the narrow field of view; this will focus the wide field of view also. If you are unable to focus the image, replace the sensor unit.

The steps of the procedure for identifying clouds with the AN/KAS-1 are as follows:

1. Use only the wide field of view so that the entire cloud can be seen.

2. Aim the sensor unit at the cloud and begin your interrogating (moving through the filters) immediately by depressing the filter switch.

3. Go through the interrogation several times, watching the changes as the cloud forms. If the cloud is a chemical nerve agent cloud, the changes will become even more apparent as you watch it through the filters.

4. Continue the interrogation for at least six cycles until confirmation can be established.

5. If the cloud dims and grows smaller when using filter No. 1 and grows larger when using the No. 2 and No. 3 filters, take immediate action to notify the bridge. Even if the suspected cloud is not a chemical agent, keep interrogating other suspicious looking clouds.

When conducting maintenance on the AN/KAS-1, follow the procedures listed in the manufacturer's technical manual and the PMS system.

Chemical Agent Point Detector System (CAPDS)

The chemical agent point detector system (CAPDS), shown in figure 9-7, is a local sampling detection device. It is used to detect the presence of chemical agents in the air. The system has an alarm that provides rapid warning. The CAPDS is capable of detecting nerve agents GB, CD, and VX in time to allow personnel to take protective countermeasures. The system provides a means of continuously sampling the outside air. It will automatically sound an alarm at the remote control unit and remote status unit. The CAPDS consists of a detector, two through-the-bulkhead units (TBU), a remote control unit, and a remote status unit. The detector consists of the alarm module and the power supply. The alarm

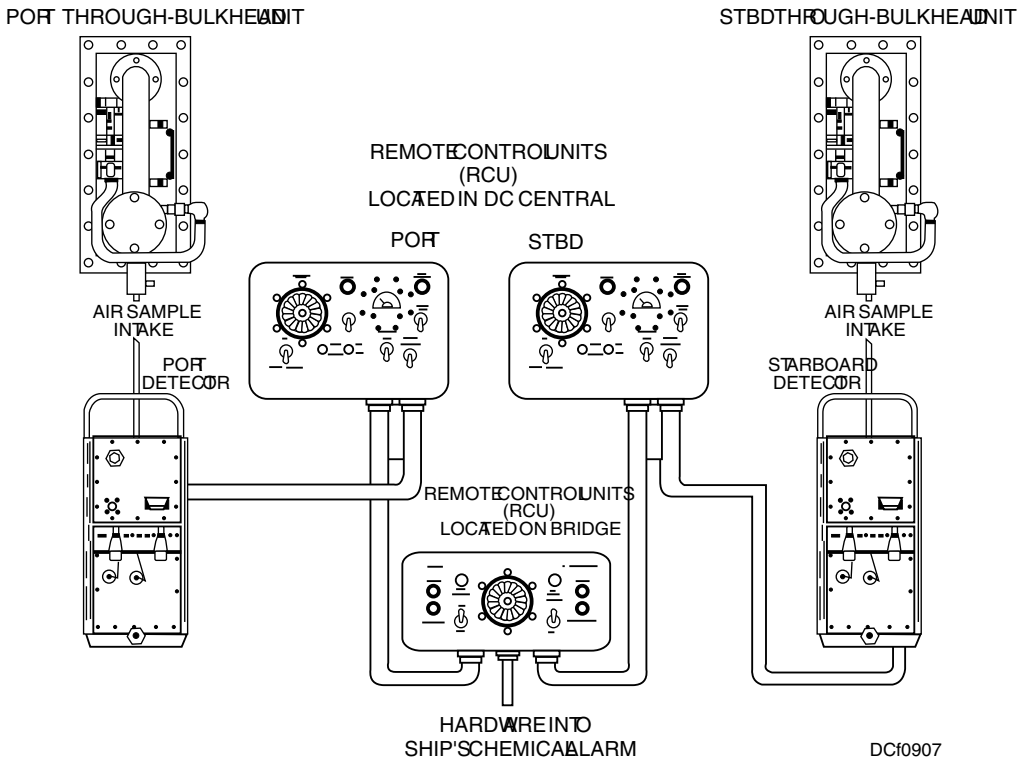

Figure 9-7. Chemical Agent Point Detector System (CAPDS).

module contains a pneumatic system, an ionization and detection system, and an alarm electrical system, which is necessary to perform the agent sampling operations. The pneumatic system is used to supply air samples from the TBU to the alarm module for chemical analysis. It will then remove the air sample once the sample has been analyzed as exhaust.

The ionization and detection system draws air samples into a heater block where it is heated to a temperature of approximately 140°F. The sample moves into a sensor cell for ionization. A sample containing chemical agents will increase the output of the sensor cell and trigger the alarm. The alarm electrical system provides the power to maintain airflow, heater temperature, and the other electrical systems involved.

The power supply provides the input power from the ship's electrical system. If the input power is lost, the power supply provides the power from an internal battery.

The through-the-bulkhead unit consists of an electronics and fan assembly. This assembly provides continuous air samples for the alarm module.

The remote control unit connects the remote status unit with the appropriate detector and the power supply. The remote status unit is mounted on the ship's bridge but has no control over the system. It merely reports the status of the system. However, it does have a manual override of the ship's alarm system.

Since the system is automatic, it requires no operation procedures once it is installed. To perform maintenance on the system, follow the guidelines listed in the planned maintenance system.

MONITORING OF CHEMICAL AGENT CONTAMINATION

In general, the purpose of chemical surveys is to detect, locate, and identify chemical agents in either liquid or vapor form. The contamination marking kit

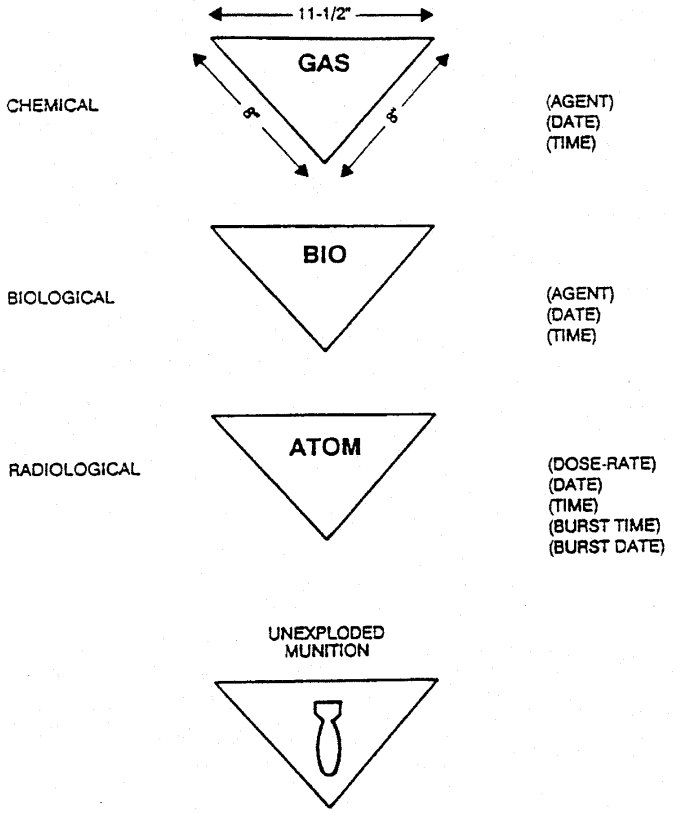

Danger	Primary Color	Secondary Color	
		Markings	Inscriptions
Radiological Area	White	ATOM	Black
Biological Area	Blue	BIO	Red
Chemical Area	Yellow	GAS	Red
Unexploded Munitions	Red	White (bomb)	None

Table 9-2. Colors Used for Contamination Markings

provides markers that makes it easy to identify contaminated areas as well as isolating those areas. The markers are triangular in shape and their colors are listed in table 9-2.

The most important information required from chemical surveys makes it possible to determine the following:

- Was the ship exposed to blood agent? If so, the mask filter canisters on all protective masks must be changed.
- Is off-gassing from a persistent agent on the ship's weather surfaces occurring? If so, a higher protective posture may be required inside the ship.
- Has the ship departed a vapor hazard area and reached an uncontaminated atmosphere? If there is no secondary vapor hazard, purging can begin at this point according to the ship's CBR Bill.
- Have decontamination and purging efforts been successful?
- The correlation of survey results, ventilation status, and tactical information.

REVIEW QUESTIONS

Q5. There are a total of how many sheets of M-8 detector paper in an unopened booklet?

1. 15
2. 20
3. 25
4. 30

Q6. What color does M-9 paper turn when a nerve or blister agent is detected?

1. Gold
2. Green
3. Red
4. Blue

Q7. The M256A1 detector kit is used to test for what form of chemical agent?

1. Liquid
2. Vapor
3. Solid
4. Mist

Q8. What is the primary function of the AN/KAS-1?

1. To provide U.S. Navy ships with the capability to detect and identify a chemical warfare (CW) agent attack
2. To provide U.S. Navy ships with the capability to detect and identify a biological warfare (BW) agent attack
3. To provide U.S. Navy ships with the capability to detect and identify radiological contamination
4. To provide U.S. Navy ships with the capability to detect and identify toxin contamination

BIOLOGICAL OPERATIONS

Learning Objective: Recall the requirements for biological warfare (BW) defense and countermeasures.

Biological operations are the use of living agents, such as bacteria, viruses, and other pathogenic microorganisms, to produce disease or death of humans, animals, or plants.

Biological agents are a threat that must be recognized and prepared for by all personnel. A large part of the defense against biological agents depends upon self-protection against the agents.

TYPES OF BIOLOGICAL WARFARE (BW) AGENTS

Military biology is only concerned with organisms that will adversely affect man, animals, or plants. The organisms used as BW agents are classified into two groups, pathogens and toxins.

Pathogens

Pathogens are living microorganisms that include bacteria, viruses, rickettsiae, fungi, and protozoa. In addition to being spread as aerosols or by weapons, the methods used to spread pathogens are vectors and ptests. Vectors include insects, ticks and mites (also known as arachnids), and animals. Pest include animals and plants.

MICROORANISMS.—Microorganisms are minute living organisms, which can usually be seen only with the aid of a microscope. Each organism is composed of a single cell or a group of associated cells

capable of carrying on all functions of life, including growth and reproduction. Microorganisms do not have a digestive tract, organs of sight, or a heat-regulating system. Many of them resemble plant life and are regarded as being in the vegetable kingdom. Some microorganisms, such as the protozoa, have characteristics that place them in the animal kingdom.

Microorganisms are universally distributed in the air, water, and soil. Every cubic foot of topsoil provides a natural home for billions of soil organisms. The skin, hair, nose, mouth, and digestive tract of humans and other animals harbor a considerable variety of microbes in large numbers.

Microorganisms capable of producing disease are known as pathogens. Most of these pathogens are parasites and live on or within another living organism, called a host, which provides shelter and nourishment. Other microorganisms thrive on decaying or dead organic material and are known as saprophytes. Most microorganisms are nonpathogenic; that is, they do not cause disease. In fact, many of them are beneficial to both man and plant life. Certain microorganisms are responsible for producing many antibiotics, such as penicillin and streptomycin. Others are important in the production of alcoholic beverages, manufacture of vinegar, leather making, and curing cheese and tobacco, as well as in the preparation of industrial solvents.

On the basis of structural and behavioral characteristics, microorganisms are divided into five distinct classifications of biological warfare agents as follows:

1. Bacteria
2. Rickettsiae
3. Viruses
4. Fungi
5. Protozoa

A brief discussion of the characteristics of each of these microorganisms and their potential threat to personnel follows.

1. Bacteria are very small single-cell organisms. However, they are large enough to be visible through an ordinary microscope. Bacteria may be spherical, rod-shaped, or spiral in form. They are present everywhere in nature, in air, soil, water, and animal and plant bodies, both living and dead.

Many types of bacteria can cause infection, and the powerful toxins produced by some can be used as biological warfare agents. Examples of diseases caused by bacteria are typhoid fever, meningitis, and tuberculosis.

2. Rickettsiae are usually smaller than bacteria, but they are still visible through an ordinary microscope. They grow only within living cells, and they are potent disease producers in man and animals. Many of them are transmitted by insect bites. Examples of diseases caused by rickettsiae are Rocky Mountain spotted fever and typhus.

3. Viruses are even smaller than rickettsiae and are not visible with the ordinary microscope. Some have been photographed through the electron microscope. Like the rickettsiae, they will grow only within the living cell. Viruses and rickettsiae are probably less well distributed than bacteria because they are more particular in their growth environments. However, it is known that both can survive for short periods of time in the air. Examples of virus diseases are mumps, smallpox, psittacosis (parrot fever), and influenza.

4. Fungi include such plants as yeasts, molds, and mildews. These organisms are known for their ability to spoil foods and fabrics.

Generally speaking, diseases caused by fungi in humans are less severe than those produced by other microorganisms. They usually produce low-grade, mild, and often chronic diseases. A few fungi are capable of producing serious diseases, such as blastomycosis (a chronic infection affecting the skin or the lungs, bones, liver, spleen, and kidneys). Several diseases of plants are caused by fungi. Examples are potato blight, cotton root rot, corn smut, and wheat rust. If an attack is made on food crops, the agents used might be in this class.

5. Protozoa are single-celled, animal-like forms that occur in a variety of shapes and often have complicated life cycles. Some protozoa cause diseases in both man and animals. Problems of production and transmission limit their application in biological warfare, but it must not be assumed that these problems could not be solved. Examples of protozoa infections of man are amoebic dysentery and malaria.

VECTORS OF DISEASE.—Disease vectors are animal carriers that transfer infective agents from one host to another. They usually are arthropods (insects, arachnids, and crustaceans) but may be other animals. Disease vectors are classified into two types as follows:

1. Biological vectors. These are animals in whose bodies the infecting organism develops or multiplies before it can infect the recipient animal.

2. Mechanical vectors. These are animals that transmit infective organisms from one host to another but, in themselves, are not essential to the life cycle of the parasite.

Mosquitoes that transmit malaria and yellow fever are biological vectors. The black horsefly, which transmits anthrax, and many insects that transmit plant diseases are mechanical vectors. Higher animals, and man himself, sometimes act as vectors. Swine are host to trichine, which produces trichinosis in man when he eats inadequately cooked, infected pork. Dogs, cats, skunks, foxes, and some other animals transmit rabies.

PESTS.—The meaning of the term *pest* as used here is restricted to certain animals (excluding microorganisms) that interfere with the health of other organisms. These pests live on or within the animals, or they are associated with them in other injurious ways. Pests are known as parasites when they obtain their food from living host cells. The presence of a large number of parasites on the surface of the body of the host, producing only mechanical effects, is known as *infestation*. Invasion of the tissues of the body of the host by parasites, producing injury followed by host reaction, is known as *infection*. Living organisms that consume or destroy food, clothing, and forest products also are characterized as pests.

Although many insects are beneficial to agriculture, great losses are caused by plant-feeding insects and by insect-borne plant diseases. Other serious losses result from the destruction of stored food, clothing, and forest products by such pests as rats and moths. Some pests affecting the animal kingdom are mites, ticks, spiders, scorpions, chiggers, lice, bedbugs, and flies. Some pests affecting plants are the Japanese beetle, snails, corn earworm, boll weevil, and the elm leaf beetle. Other pests that take a toll on man's products and have potential value as BW agents are rats, mice, groundhogs, starlings, and crows.

Toxins

Toxins are poisonous products of living organisms that when inhaled or swallowed or injected into a man or animal will cause illness or death. Some toxins used as BW agents are produced synthetically. Because they have similar characateristics, toxins are disseminated in the same manner as chemical agents.

NOTE

For detail information on pathogens and toxins, you should refer to *NSTM*, chapter 470. "Shipboard BW/CW Defense and Countermeasures."

EFFECTS OF BW AGENTS

BW agents may be selected to produce various strategic or tactical goals. These goals range from brief but crippling diseases to widespread serious illnesses with many deaths. The effects of biological agents vary widely, depending upon the agent or agents selected.

The mere presence of a disease-producing organism on or in the body of a host does not guarantee infection or illness. In fact, pathogenic organisms are frequently present and cause no harm in the human body for long periods of time. The factors that determine whether infection will result from contact between a pathogen and a host are not completely understood; however, some important factors are as follows:

- The general state of health of the individual
- The immunity of the particular individual to the particular organism
- The number of organisms to which the individual is exposed
- The ability of the organisms to cause disease

Remember that the effects of pathogens are always delayed. There is always an incubation period between the time organisms enter the body and the time that symptoms of disease are observed. This period may vary from several hours to several weeks.

To some extent, the effects of pathogens are determined by the route that the infecting organisms use to enter the body. Many organisms require a specific portal of entry to produce infection or disease. Other organisms can cause disease when they enter by any route. The usual ways in which pathogenic organisms enter the body are by inhalation, by swallowing, by direct contact, and by injection. Injection includes insect and animal bites.

DISSEMINATION OF BW AGENTS

BW agents may be spread in various ways. They may be used as fillings in bombs, shells, or aerial or surface spray tanks. Biological agents may be released from munitions such as aerosols. The aerosols are cloudlike formations of solid or liquid particles in which the biological agents are held suspended.

DETECTION OF BW AGENTS

There are no simple and rapid methods to detect BW agents such as those used to detect chemical agents and nuclear radiation. The positive detection and identification of a pathogen can be obtained only by taking samples of the organisms, growing a culture of the organisms under laboratory conditions, and then subjecting the culture to a variety of biochemical and biological tests.

Establishing definitively that a biological attack has occurred is difficult. It is normal for a small percentage of the crew to be ill due to the effects of naturally occurring pathogens. Occasionally, there are outbreaks of illness that affect a larger percentage; however, this could also be due to natural causes. Some developments that could indicate that a biological warfare agent is responsible are as follows:

- The number of casualties reaches epidemic proportions within hours to 3 days, most within a 24-hour period.
- The infection rate or death rate is higher than normally expected for the disease.
- An outbreak of a disease occurs that is not normally encountered in the area of the world in which the ship is operating.
- Personnel working in a protected environment do not contract the disease.
- Outbreak of multiple diseases occurs. To confirm that a biological attack was responsible, samples collected by a biological detection system, environmental samples collected by repair parties, or biomedical samples collected by medical personnel are crucial.

REVIEW QUESTIONS

Q9. Which of the following life forms is an example of a disease vector?

1. Bacteria
2. Fungi
3. Virus
4. Arachnid

Q10. There is always an incubation period between the time an organism enters a body and the first signs of the symptoms of an illness.

1. True
2. False

Q11. An indication of biological warfare is when the number of casualties reaches epidemic proportions within days, with most occurring within the first 24 hours.

1. True
2. False

COUNTERMEASURES AT SEA

Learning Objective: Recall chemical and biological (CB) warfare countermeasures employed when a ship is at sea to include closure, washdown, weathering, and decontamination of personnel.

The basic purpose of CB countermeasures at sea is to deny entry or neutralize contamination so the mission of the ship can be carried out without endangering the life or health of assigned personnel. The three kinds of ship protective action used when at sea are closure, washdown, and weathering.

CLOSURE SYSTEM

The closure system protects the interior of the ship against the entry of aerosols and gases. Quick action on closure is essential. It is not possible to predict the results if the ship is closed after exposure because personnel below decks may be in even greater danger from agents trapped inside as a result of closure.

COUNTERMEASURES WASHDOWN (CMWD) SYSTEM

The CMWD system is a dry-pipe sprinkler system that provides a moving screen of seawater over the weather surfaces of the ship. The flowing water carries away most of the liquid and solid contaminants that fall on the decks or bulkheads.

Use of the CMWD system is a form of active decontamination by physical removal. It is the best active decontamination option in the three respects. They are as follows:

1. It requires the least expenditure of manpower to operate.

2. It can be activated easily and quickly and it covers all, or nearly all, of the ship's weather surfaces at once, allowing liquid agent the least time to sorb into paint or nonskid.

3. It is highly effective in physical removal of contamination. It is most effective when used for prewetting before the arrival of the agent and then left on during and after agent deposition. However, it is still an effective decontamination system, even when it is not activated until after the agent has been deposited.

Periodic testing and inspection according to the planned maintenance system is necessary to ensure that the countermeasures washdown system is ready for use if needed.

WEATHERING

Weathering is the gradual reduction of a persistent hazard due to the effects of the environment. It is passive decontamination, requiring no expenditure of manpower or material. Evaporation is the primary mechanism for natural decay of a chemical hazard. It may occur as the liquid chemical agent is lying on a surface or as it desorbs from some material into which it was previously sorbed. Desorption proceeds quickly at first, then the rate slows considerably. It is important to remember that the agent vapor that results from weathering is harmful if its concentration is high enough.

Weathering is normally a part of any decontamination operation because active methods cannot reach all the agents that are deposited on the ship. The longer a liquid chemical agent is allowed to soak into alkyd paint or nonskid deck coating, the less effective are physical removal and chemical neutralization. However, as coatings age, the less they tend to absorb agents. This factor extends the time during which active decontamination measures can be effective. It may also increase the speed of weathering.

WARNING

If weathering is the decon- tamination option chosen, topside evolutions must be delayed until the hazard has decayed to a safe level or all personnel going topside must wear individual protective equipment.

In any active decontamination operation, personnel working in proximity should wear protective clothing and masks until the damage control assistant has declared the area safe.

Physical removal methods involving the use of water without oxidizers may dilute the concentration of agent but do not change their toxic properties. Therefore, care must be taken to ensure that spray, runoff, and disposal methods do not simply move contamination to other parts of the ship.

DECONTAMINATION OF PERSONNEL

Personnel decontamination procedures are designed to minimize the hazards to contaminated individuals and to prevent the spread of contaminants inside the ship. Decontamination procedures include individual and group efforts.

M291 Skin Decontamination Kit (SDK)

The M291 Skin Decontamination Kit (SDK), shown in figure fig. 9-8, provides each individual with a process for decontamination. The M291 is used to decontaminate liquid chemical agents from exposed skin areas by physical removal, absorption, and neutralization. Each kit consists of a wallet-like carrying pouch containing six sealed foil packets, enough for three complete skin applications. Each packet contains a folded applicator pad with a handle on one side. The pad is filled with the black decontaminating powder, a reactive and absorbent resin that is not toxic but may be slightly irritating to the skin or eyes. The M291 is small and rugged enough for the individual to carry in a pocket on the chemical protective overgarment (CPO) or the advanced chemical protective overgarment (ACPG) or in the carrier for the MCU-2/P series mask.

Contamination Control Area (CCA)

All personnel exposed to the weather during or after a chemical attack shall be considered contaminated and shall reenter the ship through a decontamination station or contamination control area (CCA). The basic procedures are generally the same for all ships. Variations are due to differences in the design and location of the decontamination stations. The basic decontamination process for personnel reentering the ship in a chemical hazard environment consists of five stages that are common to all ships. These stages are as follows:

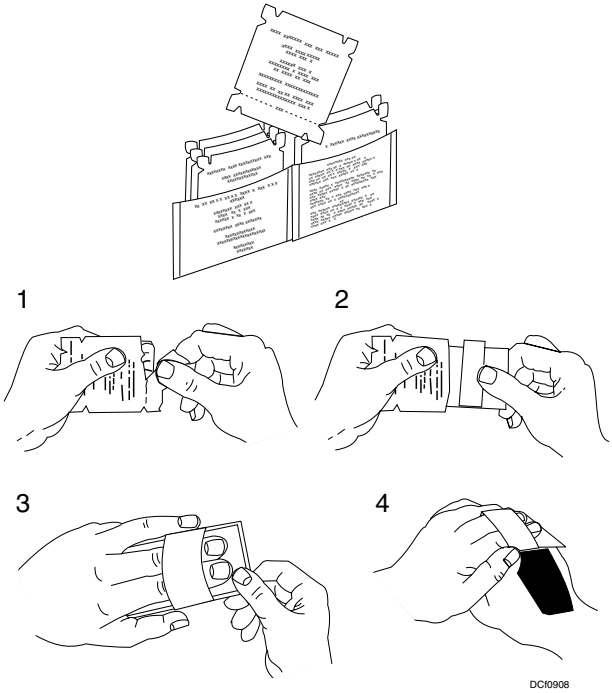

Figure 9-8. Use of the M291 Skin Decontamination Kit (SDK).

Stage 1. Gross decontamination of masks, boots, and gloves before reentering the ship. Gross decontamination is performed outside the entrance to the CCA or the Chemical Protective Systems decontamination station to reduce the danger of spreading liquid contamination into the ship.

Stage 2. Removal of outer garments and equipment subjected to liquid contamination. The chemical protective overgarment shall be cut off the person being decontaminated (doffee). This step is performed as close to the point of entry into the interior of the ship as possible.

Stage 3. Removal of inner clothing.

Stage 4. Showering.

Stage 5. Medical review. A medical department representative screens all doffees for symptoms of agent exposure and other medical problems such as heat stress.

Conventional Decontamination (Decon) Station

Specific sanitary spaces are designated in ships' plans as decontamination stations. Normally, a ship that does not have a CPS will have at least two conventional decon stations, one forward and one aft. Smaller ships may have only one. Large ships may have two additional stations amidships, one port and one starboard. Conventional decontamination stations generally have saltwater nozzles in the shower stalls in addition to freshwater nozzles. Large ships may have additional saltwater decontamination stations. Multiple decon stations and the availability of both salt and fresh water provide for working around contaminated areas and battle-damaged areas. It is desirable to have two accesses to each decon station to permit designation of one as the entrance, or dirty side, and one as the exit, or clean side. In a typical head or washroom, the entrance should be in the sink area and the exit in the shower area. Where variations from this arrangement are necessary, tape will be used to mark traffic lanes to separate the clean and dirty areas.

It is essential to ensure decon stations are properly outfitted with proper items and inspections are performed routinely. The outfitting requirements for chemical decontamination of 100 individuals are listed in table 9-3.

The contamination control area (CCA) shown in figure 9-9 is either a liquid chemical hazard area or a biological infectious hazard area. This area provides a place for removal of contaminated individual protective equipment or outer garments and preparation of personnel for processing through a conventional decontamination station. Removal of items in the CCA prevents liquid chemical contamination and infectious biological hazards from reaching the rest of the ship's interior.

The CCA should have access directly from the weather deck and have a separate exit into the interior

Table 9-3. Outfitting for Chemical Decontamination of 100 Individuals

Item	Stock Number (NSN)	Unit of Issue	Conv. Station	CCA	CPS Station
Calcium Hypochlorite	6810–00–255–0471	6 oz.		48	48
Metal Trash Cans 35 gal		each	1	4	2
Plastic Bags 55 gal	8105–01–183–9764	100		25 bags	25 bags
2'x 2' X 6" Bootwash tray				1	1
Utility Pails (5 gal)	7240–01–094–4305	each		2	2
Pan, Steam Table (scissors)	7310–00–576–4614	each		1	
Sponge, Cellular	7920–00–240–2555	each		3	3
Scissors, Bandage	6515–00–935–7138	dozen	2 ea.	10 ea.	12 ea.
Deck Brush, Scrub	7920–00–240–7171	each		3	3
Handle, Deck Brush	7920–00–141–5452	each		3	3
Boot Wash Brush	7920–00–255–7536	each		2	2
Gen. Purpose Detergent or Detergent Wetting Agent	7930–00–282–9699	gal		1	1
	6850–00–644–2008	50 lb		1	1
Measuring Cup (8oz)	7240–00–138–7983	each		1	1
M291 Kit	4230–01–276–1905	box		1	1
M8 Paper Booklets	6665–00–050–8529	each		4	4
M256A1 Kit	6665–01–016–8399	each	2		2
Bench or Stool				1	1
Twine 1 lb. Ball	4020–00–231–5870	each			
Tape, Press. Sensitive, Orange or Duct Tape, 2″	9390–00–656–1186 5640–00–103–2254	each each		1 1	
Bags, Plastic 10 gal	8105–01–183–9765		100		100
Towels		each	100		100
Soap, bars			10		10
Hose Assembly, 3/4" ID	4720–00–230–6577	each			1
Nozzle, Hose Adjustable, 3/4"	4730–00–223–6731	each			1

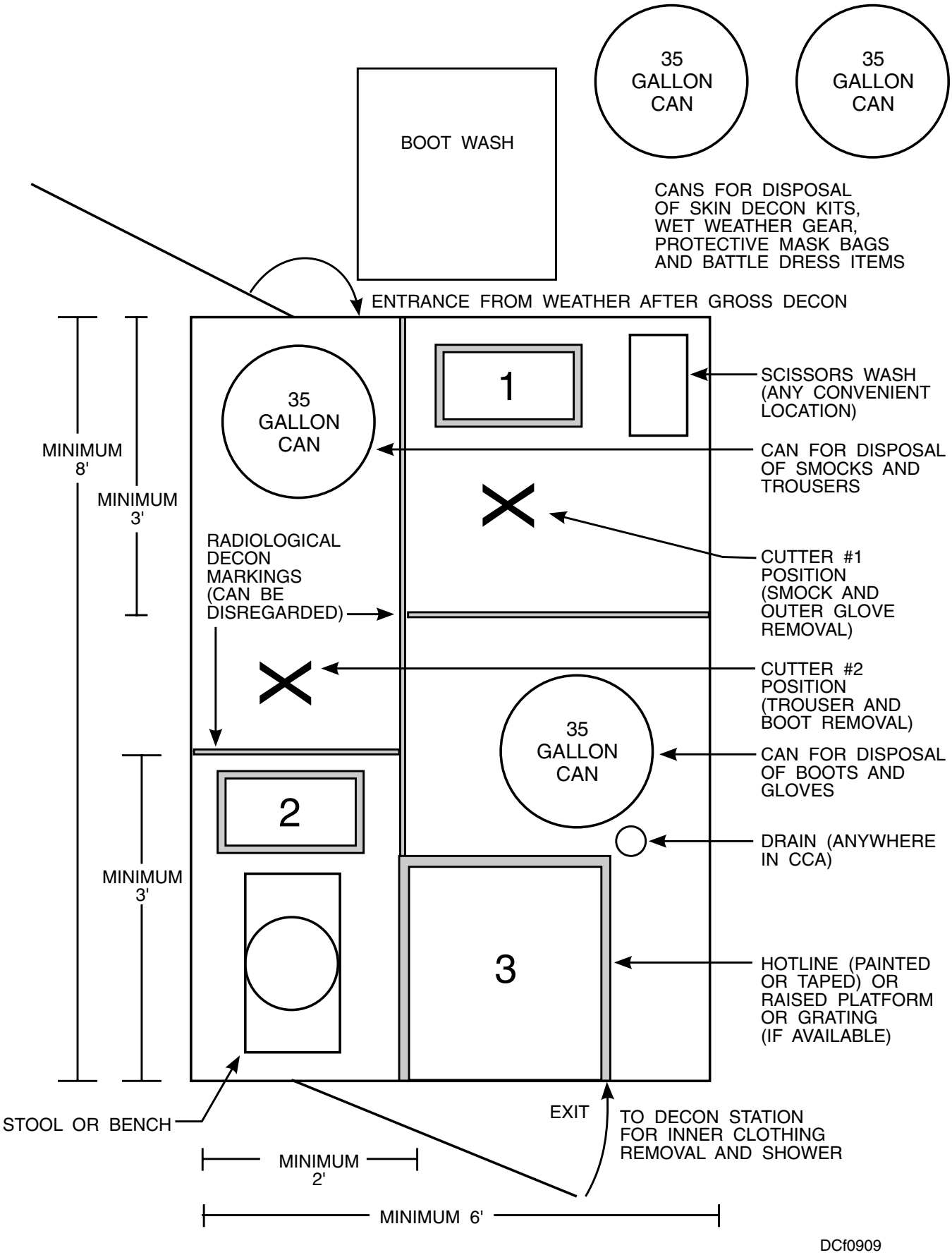

Figure 9-9. Generic contamination control area (CCA).

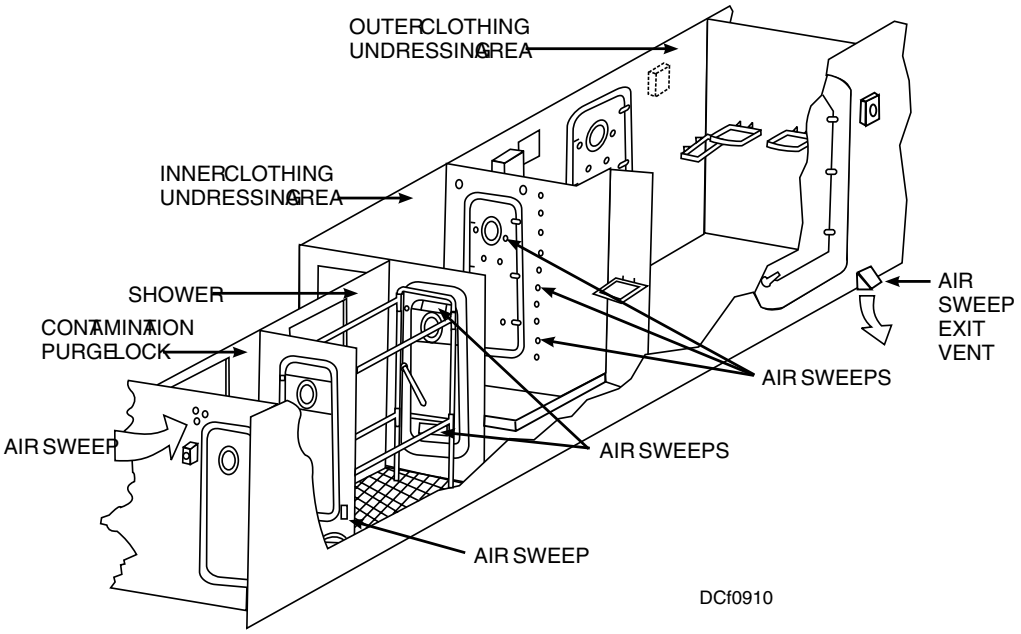

Figure 9-10. Typical CPS System.

of the ship. The optimum size of CCA spaces should be approximately 6' x 8'. A larger space can be used if available; however the minimum space is 5' x 7'. The space should be adjacent to or as near as possible to the outer skin at the weather entrance. If possible, the CCA should be located just inside the area marked as the Decontamination Station entrance. If suitable interior space is unavailable, a designated deck area outside the superstructure, preferably with overhead cover, can be used.

NOTE

Some ships do not have a space with these dimensions available. In these cases, a space with approxi- mately the same square footage will suffice as long as the cutter has enough room to do his job effectively. CCAs are not intended to be permanent locations and spaces with other functions can be used. Alternate spaces must be identified for use in the event the designated location is unusable due to battle damage.

COLLECTIVE PROTECTION SYSTEM (CPS)

The collective protection system (CPS) is a ventilation system that prevents the entry of airborne chemical, biological, and radiological contamination into the interior of the ship. Spaces serviced by the ship's CPS (fig. 9-10) can be used as a decon station for that area of the ship.

The CPS is a system that uses fans as the same purposes as a conventional HVAC system. It also has CBR filters that have the capability to remove CBR agents in any form. CPS provides two levels of protection. In total protection (TP) zones, all CBR contaminants in any physical state are filtered from the incoming air supply and a slight positive pressure is maintained to keep airborne contamination from entering by other routes. Any leakage of air at the zone boundaries is from the inside out. The air pressure inside a TP zone is maintained slightly above atmospheric with high pressure fans that supply air to the zone, with devices that control the flow of exhaust air from the zone and with air locks that prevent excessive pressure loss when someone enters or exits the zone. TP zones provide a toxic free environment where it is not necessary to wear protective clothing or masks. Total protection may not be affordable in compartments with extremely high airflow requirements, such as machinery spaces. CPS provides a lower level of safety for these areas called limited protection (LP). Chemical and biological aerosols are removed from the incoming air supply to LP zones by High Efficiency Particulate Air (HEPA) filters. The standard supply fans do not create a positive pressure and the HEPA filters do not entrap chemical agent vapor. A protective mask is required for protection from chemical agent vapor and the full Chemical Protective Ensemble (CPE) is needed for a chemical vapor hazard that has the capability to be absorbed through the skin.

A back-fit version, the Selected Area Collective Protection System (SACPS) has been developed for

ships that were built before CPS was introduced. CPS coverage for a small number of selected vital operational spaces and safe havens can be back fitted onto existing ships. SACPS fans and CBR filters are added. Incoming air is filtered and pressurized, but at a lower positive pressure than new construction CPS. Recirculation systems that were already installed within the selected zones are retained. The system is generally used where a more extensive CPS is impractical or too costly to back fit.

CPS Maintenance Responsibilities

Replacement of CPS filters and prefilters and leak tests on CBR filter systems are performed by an intermediate maintenance facility. Other troubleshooting and maintenance actions are performed by the ship's force.

CPS and Selected Area Collective Protection System (SACPS) Technical Documentation

Maintenance and operation of the CPS, SACPS, and their components should be in compliance with each ship's specific preventive maintenance system (PMS) requirements. Details of maintenance requirements are presented in the technical manuals listed below.

SS200-AF-MMM-010, *Technical Manual for Navy Shipboard Collective Protection System (CPS),* "System Description, Operation and Maintenance"

SS200-AG-MMM-010, *Technical Manual for Navy Shipboard Collective Protection System (CPS),* "Chemical, Biological, and Radiological (CBR) Filter System Operation and Maintenance"

SS200-AH-MMM-010, *Technical Manual for Navy Shipboard Collective Protection System (CPS),* "Alarm System Operation and Maintenance"

SS200-AJ-MMM-010, *Technical Manual for Navy Shipboard Collective Protection System (CPS),* "Pressure Control Valve (PCV) Operation and Maintenance"

SS200-AL-MMM-A10, *Technical Manual for LHA 1 Class Organizational and Intermediate Level Maintenance Navy Selected Area Collective Protection System (SACPS)*

UPDATING THE CHEMICAL, BIOLOGICAL, AND RADIOLOGICAL (CBR) DEFENSE BILL

The CBR Defense Bill constitutes the hull-specific application of doctrinal concepts and technical procedures. The rapid technological changes in the CBR countermeasures program mandates that all departments maintain an ongoing review and revision of the CBR Defense Bill. An outline for the CBR Defense Bill can be found in *NWP* 3-20.31, Appendix B.

REVIEW QUESTIONS

Q12. What type of decontamination does the countermeasure washdown system provide?

1. Active
2. Passive
3. Rapid
4. Temporary

Q13. What type of decontamination is performed outside CCA?

1. Rapid
2. Gross
3. Detailed
4. Intensive

Q14. What are the three steps of decontamination when the M291 Kit is used?

1. Physical removal, absorption, and spreading
2. Physical removal, absorption, and neutralization
3. Containment, absorption, and neutralization
4. Containment, absorption, and spreading

Q15. The collective protection system (CPS) is a ventilation system that prevents the entry of airborne chemical, biological, and radiological contamination into the interior of the ship.

1. True
2. False

SUMMARY

In this chapter, you were introduced to chemical warfare and biological warfare operations, defense, and countermeasures. The various types of BW agents and CW agents were also described. Finally, you were introduced to various methods and equipment that are used to detect either CW agents or BW agents. Advancements are continuously being made to ensure that the Navy will be able to conduct CW and BW defensive and countermeasures effectively. As new equipment and systems are introduced to the Navy, read the manufacturer's technical manual to familiarize yourself with the new equipment and systems.

REVIEW ANSWERS

A1. The MCU-2/P protective mask comes in a total of how many sizes? **(3) Three**

A2. What is the minimum number of C2 canisters issued with a MCU2/P protective mask? **(2) Two. A third C2 canister is issued by the ship.**

A3. What is the maximum life expectancy of a C2 canister when opened in a noncontaminated area? **(2) 60 days**

A4. What is the maximum life expectancy of a C2 canister in a contaminated environment? **(1) 30 days**

A5. There are a total of how many sheets of M-8 detector paper in an unopened booklet? **(3) 25**

A6. What color does M-9 turn when a nerve or blister agent is detected? **(3) Red**

A7. The M256A1 detector kit is used to test for what form of chemical agent? **(2) Vapor**

A8. What is the primary function of the AN/KAS-1? **(1) To provide U.S. Navy ships with the capability to detect and identify a chemical warfare (CW) agent attack**

A9. Which of the following life forms is an example of a disease vector? **(4) Arachnid**

A10. There is always an incubation period between the time an organism enters a body and the first signs of the symptoms of an illness. **(1) True**

A11. An indication of biological warfare is when the number of casualties reaches epidemic proportions within days, with most occurring within 24 hours. **(1) True**

A12. What type of decontamination does the countermeasure washdown system provide? **(1) Active**

A13. What type of decontamination is performed outside CCA? **(2) Gross**

A14. What are the three steps of decontamination when the M291 Kit is used? **(2) Physical removal, absorption, and neutralization**

A15. The collective protection system (CPS) is a ventilation system that prevents the entry of airborne chemical, biological, and radiological contamination into the interior of the ship. **(1) True**

CHAPTER 10
RADIOLOGICAL EFFECTS

Learning Objectives: Recall the components of an atom; the different types of nuclear bursts and their effects; and types of personnel injuries that are caused by blast, underwater shock, thermal radiation, and nuclear radiation.

As a Damage Controlman, you will be assigned to a repair party during general quarters (GQ). At GQ, you will participate in Chemical, Biological, and Radiological (CBR) countermeasure activities designed to limit the effects of a CBR attack. Therefore, for you to conduct your duties properly, you must possess knowledge of the basic facts about the types of nuclear bursts and their radiological effects. For more comprehensive and detailed information than can be provided here, you should consult the *Naval Ships' Technical Manual* (*NSTM*), chapter 070, "Nuclear Defense at Sea and Radiological Recovery of Ships After a Nuclear Weapons Explosion," and *Naval Warfare Publication* (*NWP*) 3-20-31, "Surface Ship Survivability."

COMPONENTS OF AN ATOM

Learning Objective: Recall the components of an atom.

Scientists have identified over one hundred substances composed of atoms bearing an identical number of protons in each nucleus that cannot be separated into simpler substances by ordinary chemical means. These substances are called elements, and the smallest quantity of an element is the atom.

An atom is made up of tiny particles known as electrons, protons, and neutrons. The relative number of these small particles determines the attributes of an element. The characteristics of each of these subatomic particles are as follows:

- The electron is an extremely small particle of matter that orbits the nucleus of the atom. It has a negative electrical charge.
- The proton is located in the nucleus of the atom. It is approximately 2,000 times as large as an electron and has a positive electrical charge.
- The neutron is also located in the nucleus of the atom. It is almost as large as a proton but has no electrical charge.

The structure of an atom resembles a solar system with the electrons orbiting around the protons and the neutrons clustered tightly in the center called the nucleus (fig. 10-1). Because the distance between the electrons and the nucleus is so great, the atom is mostly empty space. The number of electrons that orbit the nucleus of a normal atom is equal to the number of protons in the nucleus. Therefore, the electrical charge of the atom is balanced. The number of neutrons in a nucleus can vary from 0 to more than 150.

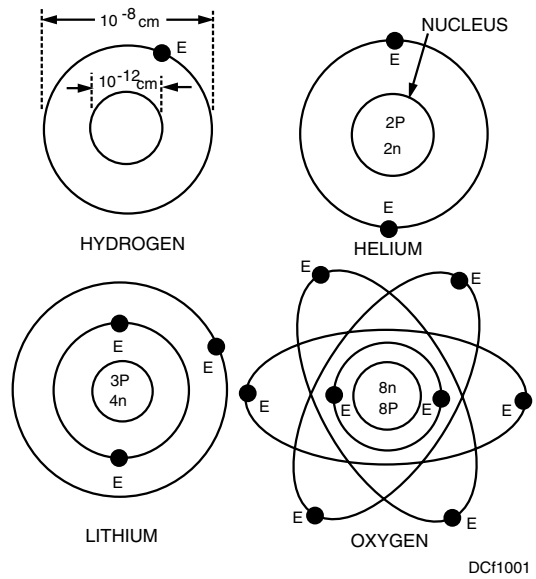

Figure 10-1. Rutherford-Bohr atomic models.

A process known as fission splits the nucleus of a heavy element into nuclei of lighter elements. In this process, an enormous amount of energy is produced. When this energy is released in a short period of time, an enormous explosion takes place. In the process known as fusion, a nuclear reaction occurs causing the nuclei of atoms to combine (fuse together) to form a more massive nuclei. This reaction results in the release of a tremendous amount of nuclear energy. An explosion resulting from a fission or fusion reaction is referred to as a nuclear burst.

REVIEW QUESTIONS

Q1. Electrons, protons, and neutrons are the three subatomic particles that make up an atom.

1. True
2. False

Q2. The electron has what type of electrical charge?

1. Active
2. Positive
3. Neutral
4. Negative

Q3. The nucleus of an atom is composed of what two particles of matter?

1. Electrons and ions
2. Photons and qualms
3. Protons and neutrons
4. Monatomic molecules and quarks

Q4. The proton has what type of an electrical charge?

1. Alternating
2. Positive
3. Neutral
4. Negative

TYPES OF NUCLEAR BURSTS

Learning Objective: Recall the different types of nuclear bursts and their characteristics.

When a nuclear device is detonated in space, in the atmosphere, or at or below the surface of the earth or ocean, many characteristic effects are produced. Some effects, such as nuclear radiations and expanding debris, are common to all of these environments, though varying in degree. Other effects, such as cratering, blast, and water shock, are particular to certain environments. Effects, such as light and heat, are visible or tangible. Others, like nuclear radiations, are not directly apparent and can only be discerned by instruments or secondary effects. Some effects occur in and last only microseconds, whereas others occur in microseconds but linger for days, months, or even years. Meteorological conditions, such as atmospheric pressure, temperature, humidity, winds, and precipitation, can affect some of the observed phenomena. All nuclear detonations, however, produce effects that can damage equipment and injure personnel.

A general explanation of the militarily significant effects of nuclear weapons is as follows:

The energy yield of a nuclear weapon is described in terms of the amount of TNT that would be required to release a similar amount of energy. Thus a nuclear weapon capable of releasing an amount of energy equal to the energy released by 20,000 tons of TNT is said to be a 20-kiloton (KT) weapon. A nuclear weapon capable of releasing an amount of energy equal to the energy released by 1 million tons of TNT is said to be a 1-megaton (MT) weapon.

The yield of a nuclear weapon may be a fraction of a kiloton or up to several megatons. Although the total yield of the weapon is not significantly influenced by the environment about the burst point, the relative effect of the weapon depends significantly on the location of the detonation. Therefore, nuclear detonations are classified according to their location as one of the following:

- Airburst
- High-altitude burst
- Surface burst
- Underwater burst
- Underground burst

NOTE

Underwater and underground bursts are often referred to as subsurface bursts.

AIRBURST

An airburst (fig. 10-2) is a burst where the point of detonation is below an altitude of 100,000 feet, and the fireball does not touch the surface of the earth. Air blast, thermal radiation (heat and light), electromagnetic pulse, and initial nuclear radiation (neutron and gamma rays) are produced around the point of detonation. There will be no significant residual nuclear radiation (gamma and beta radiation) from the resulting radioactive material unless rain or snow falls through the radioactive cloud.

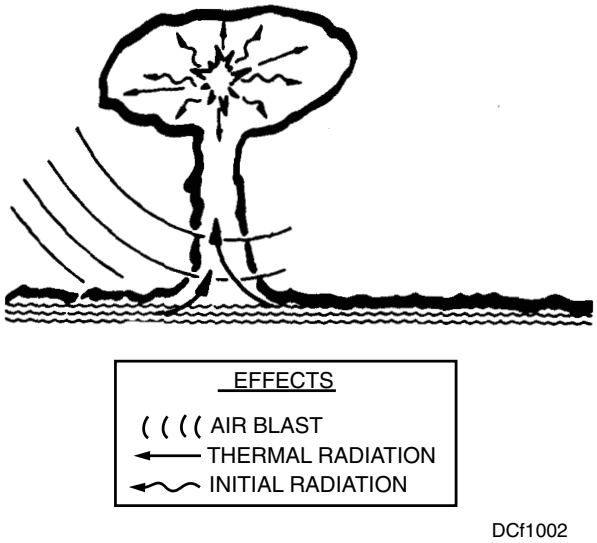

Figure 10-2. Airburst.

The energy released from a nuclear detonation below an altitude of approximately 100,000 feet may be divided into three broad categories. Approximately 50 percent of the energy produces blast and shock, about 35 percent produces thermal radiation, and about 15 percent produces nuclear radiation. Of the nuclear radiation, about 10 percent is referred to as "residual nuclear radiation" and the other 5 percent as "initial nuclear radiation." Initial radiation is delivered simultaneously with the detonation and cannot be avoided by maneuvering or evasive actions. The initial radiation dose received will occur within 1 minute after the explosion, and most of it will occur within a matter of seconds. Residual radiation, on the other hand, may be emitted over a long period of time, extending to days and years. Therefore, maneuvering out of an area contaminated by residual radiation may be an effective countermeasure.

HIGH-ALTITUDE BURST

A high-altitude burst is an airburst where the point of detonation is above 100,000 feet. The high-altitude burst produces air blast, thermal radiation, electromagnetic pulse, initial nuclear radiation, and atmospheric ionization. At such high altitudes, the proportion of energy appearing as blast decreases considerably, and at the same time, the proportion of radiation energy increases. Because of the low density of the atmosphere above 100,000 feet, the range of the initial nuclear radiation increases. In contrast to explosions below 50,000 feet, the attendant atmospheric ionization from a burst above 100,000 feet will last from minutes to hours. The important effects of high-altitude bursts cause damage to weapons systems or satellites operating in the upper atmosphere or in space. There will also be interference with electromagnetic waves from communications or radar systems that pass through or near the region of the burst.

SURFACE BURST

A surface burst (fig. 10-3) is a burst where the point of detonation is on, or above, the surface of the earth and the fireball touches the surface of the earth. The surface burst produces air blast, thermal radiation, and electromagnetic pulse. It produces initial nuclear radiation around surface zero (SZ) and residual (transit and deposit) nuclear radiations around SZ and downwind from SZ. Transit radiation is airborne radioactive material from a base surge and/or fallout. Deposit radiation is radioactive material from a base surge and/or fallout that settles on exposed surfaces. Surface bursts over water will also produce underwater shock and surface water waves, but these effects will be of less importance except to submarines. Over land, earth shock will be produced but will not be an important effect at any significant distance from the point of detonation.

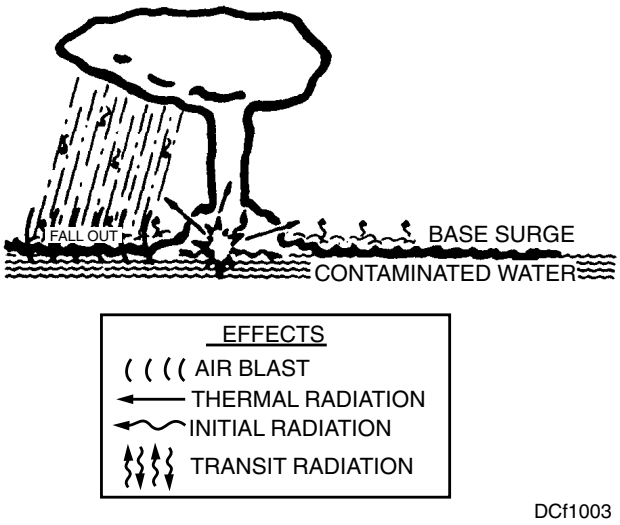

Figure 10-3. Surface burst.

UNDERWATER BURST

An underwater burst (fig. 10-4) is a burst where the point of detonation is below the surface of the water. An underwater burst produces underwater

shock and a water plume which then causes a base surge. Bursts with very shallow points of detonation can also produce air blast, initial nuclear radiation, fallout, and possibly some thermal radiation. These effects will be reduced in magnitude from those of a water surface burst and will become rapidly insignificant as the depth of the point of detonation is increased. The range of damage due to shock is increased as the depth of the point of detonation is increased. For a given weapon yield, greater hull and machinery damage will be produced by shock from an underwater burst than by air blast from an airburst or a surface burst. The reverse is true for topside equipment, such as antennas and missile launchers.

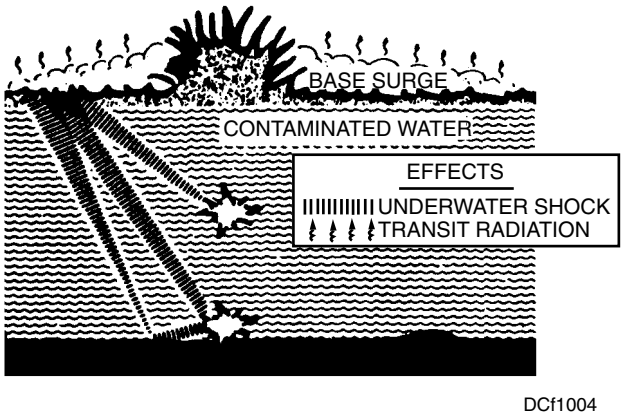

Figure 10-4. Underwater burst.

When a high-yield weapon is detonated in deep water (fig. 10-5) adjacent to a continental shelf, large breaking waves can be generated by the upsurge along the shelf slope. These waves will appear on the shallow-water side of the shelf edge. They are characterized by a long period with a sharp, possibly breaking, crest. They dissipate in amplitude as they progress toward the shore. Calculations and simulation experiments were conducted with the continental shelf off the east coast of the United States. They indicate that in the near vicinity of the shelf edge (shallow-water side only), these waves may be large enough to damage the largest combatant ships and to swamp or capsize smaller ships.

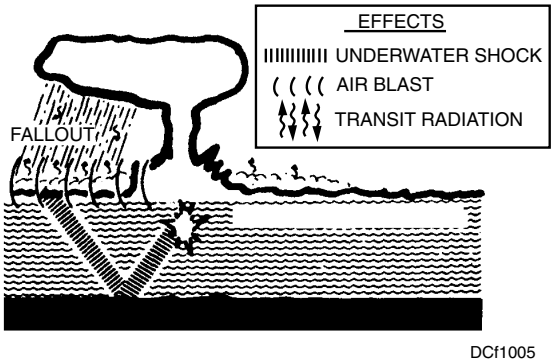

Figure 10-5. Deep underwater burst.

UNDERGROUND BURST

An underground burst (fig. 10-6) is a burst where the point of detonation is below the surface of the ground. An underground burst produces a severe earth shock, especially near the point of detonation. Thermal radiation, air blast, initial nuclear radiation, and fallout will be negligible or absent if the burst is confined below the surface of the earth. For shallow underground bursts, the air blast, thermal radiation, and initial nuclear radiation will be less than for a ground surface burst. Ground shock will cause damage within about three crater radii but little beyond. Early fallout can be significant, and at distances near the explosion base surge (evidenced by a dust cloud) will be an important hazard.

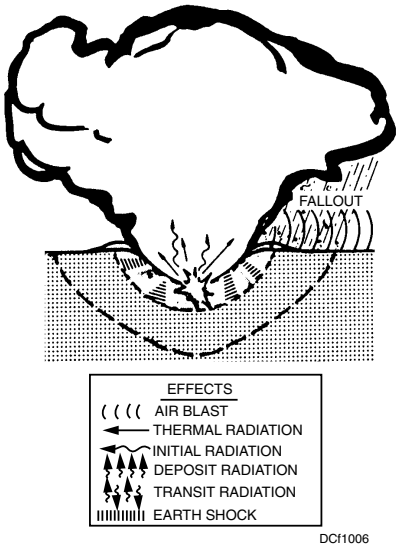

Figure 10-6. Underground burst.

REVIEW QUESTIONS

Q5. An airburst is a nuclear burst where the point of detonation is below what altitude?

1. 50,000 feet
2. 62,00 feet
3. 80,000 feet
4. 100,000 feet

Q6. A surface nuclear burst is a burst where the point of detonation is on or above the surface of the earth and the fireball touches the surface of the earth.

1. True
2. False

Q7. An underwater nuclear burst produces underwater shock and a water plume that then causes a base surge.

1. True
2. False

EFFECTS OF NUCLEAR WEAPON BURSTS

Learning Objective: Recall the different types of effects resulting from nuclear bursts.

Specific effects of nuclear detonations depend on the type of nuclear weapon and the type of burst. Also, the effects are influenced considerably by the environment in which the weapon is detonated. A description of the effects of nuclear bursts and the modification of these effects that can be caused by the environment are provided in the following paragraphs.

AIR BLAST

Air blast is the shock wave that is produced in the air by an explosion. The shock wave initially travels outward at a velocity of approximately seven times the speed of sound at high overpressures. It will then gradually slow down to a sonic speed of about 1,000 fps at low overpressures.

An air blast produces a rapid increase in the normal atmospheric (static) pressure and creates high wind (dynamic) overpressures. The high static overpressures produced cause damage by squeezing and crushing targets. The dynamic overpressures cause damage by bending or dragging targets. Ship structures and buildings are primarily vulnerable to static overpressures, whereas aircraft, masts, antennas, and exposed personnel are vulnerable to dynamic overpressures.

UNDERWATER SHOCK

Underwater shock is the shock wave that is produced in the water by an explosion. The shock wave initially travels several times the speed of sound in the water but quickly slows down to a hypersonic speed of approximately 5,000 fps. Underwater shock produces rapid accelerations that can disarrange equipment and machinery, rupture hulls, and/or injure personnel. Both the directly transmitted shock wave and the shock wave reflected from the sea bottom can be damaging. An underwater explosion produces a shock wave similar to that of an airburst. However, underwater shock damage is measured by the peak vertical velocity (for surface ships) and by the peak translational velocity (for submerged submarines), rather than by the water overpressures produced by the shock front. Figure 10-7 shows the direct and reflected shock waves.

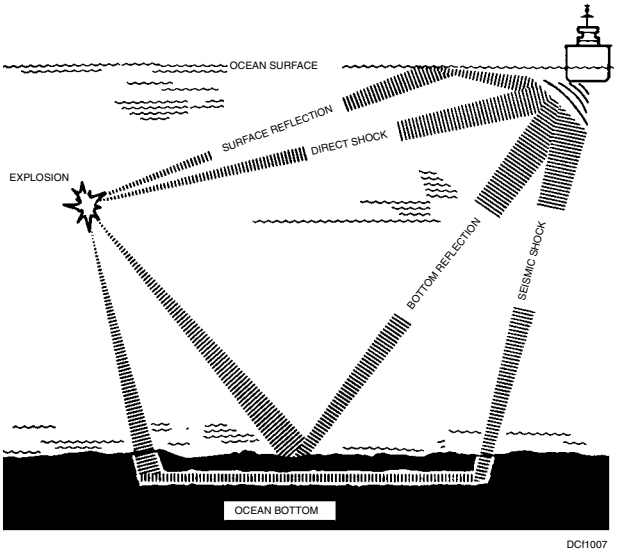

Figure 10-7. Direct and reflected shock waves for an underwater burst.

Four factors determine whether the greater damage will be caused by the direct wave or the reflected wave:

1. Distance from burst

2. Depth of burst
3. Depth of water
4. Bottom configuration and structure

When the point of detonation is above the bottom, the shock wave reflected from the bottom can produce more severe damage to weapon-delivery equipment at a given range than the direct shock wave. Even though the peak pressure of the reflected wave is less than that of the direct wave, the reflected wave will disperse in a more nearly vertical direction. It is, therefore, more effective in producing the vertical motions that control the degree of damage.

The time separation between direct and reflected shock waves decreases as the point of detonation approaches the bottom. When the point of detonation is directly on the bottom, the two waves overlap. For such a burst, the water depth has a direct effect on the range at which the weapon-delivery capability of surface ships will be impaired. However, the water depth has no significant effect on the ranges at which their mobility and seaworthiness will be impaired. Where the sea bottom is sloped, a ship downslope from the point of detonation will tend to receive less damage than a ship an equal distance upslope from the point of detonation. Where the sea bottom is essentially flat, the strength of a reflected wave will depend on the bottom structure. It will be less for mud than for sand, but greater for rock than for sand.

THERMAL RADIATION

Thermal radiation is the radiant energy (heat and light) that is emitted by the fireball. Thermal radiation travels at the speed of light and persists as long as the fireball is luminous. The duration of thermal radiation emission depends on weapon yield. It will last less than 1 second for a weapon yield of 1 KT and approximately 8 or 9 seconds for a weapon yield of 1 MT. Thermal radiation is effectively shielded by anything that will cast a shadow (opaque materials). Thermal radiation can incapacitate exposed personnel by causing skin burns, flash blindness, or retinal burns.

Over land, thermal radiation will ignite fires in buildings, vehicles, dry vegetation, and other combustible materials.

Thermal radiation is modified by the height of the point of detonation, weapon yield, atmospheric conditions, cloud cover, and terrain features. As the height of the point of detonation is increased, the area of the surface of the earth exposed to the thermal radiation increases because line-of-sight area increases, and there are fewer shadows from such things as existing structures, vegetation, and terrain features.

As the weapon yield is increased, the range at which thermal radiation can cause skin burns and eye injuries to exposed personnel increases. It will extend well beyond the range at which blast and initial nuclear radiation are of significance. The emission rate of thermal radiation from a high-yield weapon is slower than that from a low-yield weapon. Thus the high-yield weapon must deliver more thermal energy to do an equivalent amount of damage because a target has more time to dissipate the heat being received.

The ability of the atmosphere to lessen the effect of thermal radiation depends on such factors as absorption by water vapor, carbon dioxide, ozone, and impurities in the air. On days when fog, haze, and clouds are between the point of detonation and the target, thermal radiation will be decreased. On the other hand, when fog, haze, and clouds are above the burst and the target, a significant amount of thermal radiation will reflect downward and increase the severity of burns received at a given location. Such conditions can also increase the number of personnel who are flash-blinded or dazzled by a burst. The terrain surface cover, such as snow, can also reflect significant thermal radiation. This adds to both the range and severity of the thermal effect.

NUCLEAR RADIATION

The four types of nuclear radiation released as the result of a nuclear explosion are alpha particles, beta particles, gamma rays, and neutrons.

Alpha particles travel only a few centimeters in air before they are stopped. They cannot penetrate even a thin sheet of paper.

Beta particles can travel several feet in air, but they cannot penetrate a sheet of aluminum that is more than a few millimeters in thickness. Beta particles cannot penetrate the normal combat uniform.

Gamma rays are a form of electromagnetic radiation, indistinguishable from X rays.

Neutrons are electrically neutral particles. Both gamma rays and neutrons can travel great distances in air. Gamma rays and neutrons have greater penetrating power than the other forms of nuclear radiation. Their injurious effects on personnel are also quite similar.

Nuclear radiation does not affect most materials in any visible manner. Thus ships, vehicles, electronic equipment (except transistors), and other equipment are not damaged by radiation. However, radioactive contamination does pose a danger to operating personnel. The term *contamination* is used to mean radioactive material that has been deposited where it is not wanted. All radioactive contamination presents a hazard to personnel.

ATMOSPHERIC IONIZATION

Atmospheric ionization is an increase in the density of electrons in the atmosphere around a nuclear burst. These electrons affect radio and radar signals by removing energy from the waves. This decreases the strength of the signals and refracts the wave front, thereby changing the direction of transmission. For detonations below 100,000 feet, this effect disappears in a matter of seconds. At higher altitudes the effect can last up to several hours. The effect can be of considerable importance where communications are over a long range and where radar targets are in or above the ionized layer.

ELECTROMAGNETIC PULSE

An electromagnetic pulse (EMP) will be produced by high-altitude bursts, airbursts, and surface bursts. The initial nuclear ionizing radiation ionizes the atmosphere around the point of detonation. This action produces an EMP, which will contain frequency components in the range from a few to several hundred kilocycles per second. The EMP has magnetic and electric field components that exist for only a fraction of a second. The magnetic field component is significant inside the radius of the ionized atmosphere. It can induce large currents in cables and long-lead wires. These large transient currents can burn out electronic and electrical equipment. The electric field component can also produce transient signal overloads and spurious signals on communication nets and in computer-driven systems. At ranges where ships suffer minor damage from other weapon effects, the major effect of the EMP is expected to be the tripping of circuit breakers and blowing of fuses in protective circuitry. At closer ranges, there is a high probability of permanent damage to the electronic and electrical equipment.

INITIAL NUCLEAR RADIATION

Initial nuclear radiation is defined as the radiation (essentially neutrons and gamma rays) that is emitted by the fireball and the cloud during the first minute after detonation. All significant neutron radiation is emitted in less than 0.1 second and gamma radiation up to 20 or 30 seconds, depending on weapon yield. The l-minute limit is set, somewhat arbitrarily, as the maximum time for the nuclear cloud to rise beyond the range in air at which gamma radiation is a significant hazard. Generally, initial nuclear radiation might not produce significant material damages, but it will incapacitate personnel.

Transient radiation effects on electronics (TREE) is caused by initial gamma and neutron emissions from a nuclear burst. These emissions result in the failure or degraded operation of sophisticated solid-state circuits. Computers and other equipment having solid-state computers are particularly sensitive to TREE and also equipment with semiconductors. Some effects are temporary but some are also permanent.

FALLOUT

Fallout is a major effect of a surface, shallow underground, or underwater burst. It is the radioactive material that falls from the nuclear cloud and is deposited on exposed surfaces. The fallout consists primarily of fission products (gamma and beta emitters) mixed with material that was vaporized by the fireball and drawn up into the nuclear cloud. Fallout, whether airborne or deposited, is a major hazard because it emits gamma radiation. This radiation can penetrate ship structures, buildings, and aircraft, to name a few. It can also reach personnel, causing radiation injury, incapacitation, and even death. Deposited fallout also presents a contamination hazard to personnel. The militarily significant fallout, often called early fallout, is usually deposited in less than 24 hours in an area downwind of SZ.

The wind directions up to the top of the cloud determine the area contaminated by fallout. In a complete calm, the fallout pattern is roughly circular. A constant wind direction causes an elongation of the pattern. Complicated wind patterns (wind shear), as well as variations in wind speed and direction, cause complicated ground patterns. The fallout pattern is difficult to predict accurately except under calm and very stable wind conditions.

An airburst or a smaller weapon will reduce fallout. Also, the complete containment of an underground burst will eliminate fallout.

Fallout landing on water will sink and will not be a hazard to ships that pass through the area after the fallout has stopped coming down. Fallout over a land area will remain on the surface and will be a hazard to personnel living in or passing through the area. Eventually all fallout will decay to a militarily insignificant level.

BASE SURGE

Base surge from an underwater burst is a rapidly expanding cloud or mist of water droplets. This cloud is produced by the collapse of the water column that was thrown up by the underwater detonation. After the early, rapid expansion of the visible base surge (2 to 4 minutes), the base surge moves downwind at the speed of the surface wind. The base surge will become invisible in less than one-half hour. The radioactivity initially will occupy about the same volume as the visible base surge. However, as the water droplets evaporate, the radioactive particles and gases will remain in the air and continue to disperse as an invisible radioactive base surge. For approximately 30 minutes after the burst, the base surge is highly contaminated with fission products and is a source of intense transit radiation.

Airborne fallout and base surge contamination can enter a ship or shore installation through the ventilation and combustion-air systems. This could present a radiological hazard. In some instances, hazardous amounts of contamination could concentrate in ventilation ducts, boiler air passages, and interior spaces. High concentrations of radioactive material in these trunks may produce a gamma-radiation hazard to personnel working nearby. Radioactive material deposited in interior spaces may also present radiation hazard to personnel coming into contact with beta particles, even though there may be only a minor penetrating gamma-radiation hazard. For aircraft in flight, the entry of airborne radioactive materials will not be a hazard during the flight but may represent a hazard to maintenance personnel later.

RADIOACTIVE WATER POOL

A surface or underwater nuclear detonation creates a radioactive water pool in the area of the detonation. This pool expands outward rapidly from SZ, for about 2 minutes, and continues to expand more slowly. At 30 minutes, dispersion of the pool and radioactive decay will have reduced the hazard to one of tactical insignificance. During the early expansion phase of this pool, a dose rate of several thousand rad/hr may exist at the water surface.

REVIEW QUESTIONS

Q8. Four basic types of nuclear radiation are given off during a nuclear explosion: alpha particles, beta particles, gamma rays, and neutrons.

1. True
2. False

Q9. Which of the following factors is not considered in determining if greater damage to a ship will be caused by the direct wave or the reflected wave from an underwater nuclear burst?

1. Distance from burst
2. Depth of burst
3. Depth of water
4. Height of wave action at time of burst

Q10. Initial nuclear radiation is defined as the radiation that is emitted by the fireball and the cloud during the first minute after detonation.

1. True
2. False

Q11. A nuclear burst can produce an atomic magnified pulse (AMP) that contains frequency components in the range from a few to several hundred kilocycles per second.

1. True
2. False

PERSONNEL INJURIES

Learning Objective: Recall the different types of personnel injuries that are caused by blast, underwater shock, thermal radiation, and nuclear radiation.

Injuries to personnel can be caused by the blast, by underwater shock, by thermal radiation, and by the nuclear radiation produced by a nuclear burst.

BIOLOGICAL EFFECTS OF NUCLEAR RADIATION

A person receiving a serious injury as a result of a nuclear burst and is man a battle station is described as combat ineffective (CI). The potential for a given nuclear weapon to produce fatalities is fairly well known; however, the potential for CIs is not well known. We have no satisfactory method for estimating the extent to which total injuries relate to the number of CIs. Therefore, for each weapon effect capable of injuring an individual, the noninjury and fatal levels are stated. Only the estimates of the degree of injury are stated for the levels between these injury categories. Table 10-1 outlines the biological effects associated with a variety of dose ranges for both acute (less than 24 hours) and protracted (over 24 hours) doses.

AIR BLAST INJURY

Bodily displacement is the dominant cause of air blast casualties for personnel in the open. Personnel can be picked up and thrown by the blast. They receive their injuries upon landing. The extent of the injuries will depend upon the velocity of the body's movement,

Table 10-1. Biological Effects of Nuclear Radiation

Dose Range (rads)	Onset and Duration of Initial Symptoms	Performance (Mid–Range Dose)	Medical Care and Disposition
0 to 70	From 6 to 12 hours: none to slight incidence of transient headache and nausea; vomiting in up to 5 percent of personnel in upper part of dose range.	Combat–effective.	No medical care; return to duty.
70 to 150	From 2 to 20 hours: transient mild nausea and vomiting in 5 to 30 percent of personnel.	Combat–effective.	No medical care; return to duty; no deaths anticipated.
150 to 300	From 2 hours to 2 days: transient mild to moderate nausea and vomiting in 20 to 70 percent, mild to moderate fatigability and weakness in 25 to 60 percent of personnel.	DT: PD from 4 hours until recovery. UT: PD from 6 to 19 hours. PD from 6 weeks until recovery.	At 3 to 5 weeks: medical care for 10 to 50 percent. At low end of range less than 5 percent deaths; at high end, death may occur for more than 50 percent; survivors return to duty.
300 to 530	From 2 hours to 3 days: transient moderate nausea and vomiting in 50 to 90 percent; moderate fatigability in 50 to 90 percent of personnel.	DT: PD from 3 hours until death or recovery. UT: PD from 4 to 40 hours and from 2 weeks until death or recovery	At 2 to 5 weeks: medical care for 10 to 80 percent. At low end of range less than 10 percent deaths; at high end, death may occur for more than 50 percent; survivors return to duty.
530 to 830	From 2 hours to 2 days: moderate to severe nausea and vomiting in 80 to 100 percent of personnel. From 2 hours to 6 weeks: moderate to severe fatigability and weakness in 90 to 100 percent of personnel.	DT: PD from 2 hours to 3 weeks; CI from 3 weeks until death. UT: PD from 2 hours to 2 days and from 7 days to 4 weeks; CI from 4 weeks until death.	At 10 days to 5 weeks: medical care for 50 to 100 percent. At low end of range, death may occur for more than 50 percent at 6 weeks; at high end, death may occur for 99 percent at 3 1/2 weeks.
830 to 3,000	From 30 minutes to 2 days: severe nausea, vomiting, fatigability, weakness, dizziness and disorientation; moderate to severe fluid imbalance and headache.	DT: PD from 45 minutes to 3 hours; CI from 3 hours until death. UT: PD from 1 to 7 hours; CI from 7 hours to 1 day; PD from 1 to 4 days; CI until death.	1000 rads: at 4 to 6 days, medical care for 100 percent; 100 percent deaths at 2 to 3 weeks. 3000 rads: at 3 to 4 days, medical care for 100 percent; 100 percent deaths at 5 to 10 days.
3,000 to 8,000	From 30 minutes to 5 days: severe nausea, vomiting, fatigability, weakness, dizziness, disorientation, fluid imbalance, and headache.	DT and UT: CI from 3 to 30 minutes. PD from 30 to 90 minutes; CI from 90 minutes until death.	4500 rads: at 6 hours to 1 to 2 days, medical care for 100 percent; 100 percent deaths at 2 to 3 days.
Greater than 8,000	From 30 minutes to 1 day: severe and prolonged nausea, vomiting, fatigability, weakness, dizziness, disorientation, fluid imbalance, and headache.	DT and UT: CI from 3 minutes until death.	8000 rads: medical care needed immediately to 1 day; 100 percent deaths at 1 day.
LEGEND:	CI – combat–ineffective (less than 25 percent performance) PD – performance–degraded (25 to 75 percent performance)		DT – demanding task UT – undemanding task
WARNINGS:	1. This data is based on accumulated whole body acute exposure to neutron and gamma radiation over a 24 hour period. The skin dose from beta radiation on unprotected skin is not included. 2. This information is provided for planning. It shall not be used for the management of health care for individual patients.		

the nature of the object with which the body collides, and the nature of impact, whether glancing or solid.

Primary blast effects are associated with injuries from static overpressure. Eardrums can rupture at about 5 pounds per square inch (psi), lung injuries occur at approximately 15 psi, and fatalities begin at 30 psi. Personnel standing in the open will be picked up and thrown by gust winds at overpressures of approximately 6 psi. Personnel prone in the open will be picked up and thrown at overpressures of approximately 12 psi.

UNDERWATER SHOCK INJURY

Underwater shock produces injury among topside and below-deck personnel by the rapid upward movement of the deck. Table 10-2 shows the estimated peak vertical velocity, in feet per second, which will produce certain injuries from underwater shock. It should be noted that the peak vertical velocities are the same as those required to produce damage to the ship.

Table 10-2. Combat Ineffectives from Underwater Shock

EFFECT	PEAK VERTICAL VELOCITY feet/second
Broken ankles or heel bones	10
Seated or supine man, collision with adjacent objects	15
Standing man, skull injuries	20

THERMAL RADIATION INJURY

Thermal radiation can cause burn injuries directly when the skin absorbs radiant energy. It can also cause burn injuries indirectly as a result of fires started by the radiation. The flash of thermal radiation from the fireball produces direct burns, called flash burns. The indirect, or secondary, burns are called flame burns. These burns are like the skin burns that are caused by any large fire, no matter what its origin.

Because thermal radiation can burn the retina of the eye, it can cause permanent eye damage to personnel looking directly at the burst. For example, a 1-MT burst 25 miles high could produce retinal burns out to the horizon on clear nights. A more frequent occurrence is the temporary loss of visual acuity (flash blindness or dazzle). This is caused by exposure to the extreme brightness of a nuclear burst, particularly at night, when the eyes have adapted to the dark. This may happen regardless of the direction you are facing. Flash blindness or dazzle occurs at ranges beyond those for retinal burns. Little data on the ranges at which flash blindness will occur is available.

NUCLEAR RADIATION INJURY

Radiological hazards described in this section are those that might be of significance for the military effectiveness of naval personnel in combat operations. Injuries to personnel can be caused by exposure to initial or residual radiation or a combination of the two. Unlike injuries from other weapon effects, nuclear ionizing radiation injuries may not become evident immediately unless a high enough dose is received. Nuclear radiation, even in very small doses, has some harmful effects on the body. It should be avoided whenever possible without interfering with military operations.

FACTORS INFLUENCING RADIATION INJURIES.—An injury to an individual who has received nuclear radiation will depend on many factors. Some of these factors are as follows:

- Radiation dose received
- Partial or whole-body exposure
- Period over which the dose is received
- Variations in the body's resistance to radiation injury, including those due to physical condition, sex, and age
- Previous radiation exposure
- Presence or absence of other injuries
- Periods of recuperation between periods of radiological exposure

The time required for a previously unexposed individual in good health to get sick or die after exposure will vary. It depends primarily on the total dose received, the period of time over which it was received, and variations in individual physical makeup. Some individuals have greater resistance to radiation injury than others have, and some may have had partial body shielding when exposed. For those personnel, a larger dose is required to produce a given biological effect. Individuals previously exposed may require less radiation to make them combat ineffective than those who were not previously exposed. The human body can repair some of the radiation injury but not all of it.

Generally, a given dose received in a short period of time will be more harmful than the same dose received over a longer period of time. For practical purposes, the types of radiation exposures are as follows:

- Acute. Those in which doses are received in a short time, normally less than 24 hours, as a result of exposure to initial radiation, base surge, or fallout, or combinations thereof.

- Protracted. Those in which doses are received over a longer period of time, normally greater than 24 hours, as a result of exposure to fallout.

CHARACTERISTICS OF RADIATION SICKNESS.—Radiation sickness is the complex of symptoms characterizing an excessive exposure of the entire body or a large part of it to nuclear radiation. The onset of radiation sickness depends primarily on the dose received. Early symptoms are nausea, vomiting, and diarrhea, which may be followed by hemorrhage, inflammation of the mouth and throat, and general loss of energy. At lower dose levels that will cause sickness, several hours might elapse before the severity of the symptoms will make anyone a CI. After the initial period of sickness, a variable latent period is likely during which the individual shows few outward symptoms other than a general lack of well being. During this middle period, personnel should be able to perform most light tasks. After a week or so, the second and more serious phase of their sickness occurs and lasts several weeks until the person either recovers or dies. As dose levels increase, the pace of illness quickens—the onset occurs sooner and the latent period becomes shorter. Also, the probability of death increases, and the time between exposure and death shortens.

REVIEW QUESTIONS

Q12. Burn injuries to personnel can result when their skin directly absorbs radiant energy from thermal radiation.

1. True
2. False

Q13. What type of nuclear blast causes bodily displacement casualties for personnel caught in the open?

1. Undewater
2. Airblast
3. Underground
4. Stratospheric

Q14. Underwater shock produces injury among topside and below-deck personnel by the rapid upward movement of the deck.

1. True
2. False

SUMMARY

In this chapter you have been introduced to nuclear bursts and their effects. Your knowledge of these effects and bursts will better prepare you to train personnel to protect themselves from the effects of nuclear bursts. In the following chapter you will be introduced to personnel defense, shipboard defense, and recovery.

REVIEW ANSWERS

A1. Electrons, protons, and neutrons are the three subatomic particles that make up an atom. **(1) True**

A2. The electron has what type of electrical charge? **(4) Negative**

A3. The nucleus of an atom is composed of what two particles of matter? **(3) Neutrons and protons**

A4. The proton has what type of an electrical charge? **(2) Positive**

A5. An airburst is a nuclear burst where the point of detonation is below what altitude? **(4) 100,000 feet**

A6. A nuclear surface burst is a burst where the point of detonation is on or above the surface of the earth and the fireball touches the surface of the earth. **(1) True**

A7. An underwater burst produces underwater shock and a water plume that then causes a base surge. **(1) True**

A8. Four basic types of nuclear radiation are given off during a nuclear explosion: alpha particles, beta particles, gamma rays, and neutrons. **(1) True**

A9. Which of the following factors is not considered in determining if greater damage to a ship will be caused by the direct wave or the reflected wave from an underwater nuclear burst? **(4) Height of wave action at time of burst**

A10. "Initial nuclear radiation" is defined as the radiation that is emitted by the fireball and the cloud during the first minute after detonation. **(1) True**

A11. A nuclear burst can produce an MMP that contains frequency components in the range from a few to several hundred kilocycles per second. **(2) False. A nuclear burst produces an electromagnetic pulse (EMP) that contains frequency components in the range from a few to several hundred kilocycles per second**

A12. Thermal radiation can cause burn injuries when the skin directly absorbs radiant energy. **(1) True**

A13. What type of blast causes bodily displacement casualties for personnel in the open? **(2) Airblast**

A14. Underwater shock produces injury among topside and below-deck personnel by the rapid upward movement of the deck. **(1) True**

CHAPTER 11

RADIOLOGICAL DEFENSE AND RECOVERY

Learning Objectives: Recall the different types of radioactivity, detection, indication, and computation (RADIAC) and dosimeter instruments and their design limitations, the different types of radiological surveys, and the different types of exposure control.

Radiological defense is a very important part of the ship's recovery phase. Radiological defense is the area of nuclear survivability that is most subject to management by the ship. Even if the ship is physically unaffected, the overall mission capability will be reduced by the effects of radiation on the crew. The radiological hazard can endanger ships in areas hundreds of miles from surface zero and it lasts the longest of any of the nuclear weapon effects. That is why it is important to minimize the radiological hazard to personnel through the proper use of radiological defense and recovery procedures.

RADIAC INSTRUMENTS USED FOR RADIOLOGICAL DEFENSE

Learning Objective: Recall the different types of RADIAC and dosimeter instruments and their design limitations.

Nuclear radiation once present cannot be detected by any of the five senses. Therefore, special instruments and devices have been developed to do this job. From the military standpoint, we not only need to detect radioactivity but we also need to know where the radiation is and what the intensity is. RADIAC instruments serve both of these needs and are designed to perform the following functions:

- Detect beta and gamma radiation.
- Measure the intensity of radiation.
- Measure radiation dose.
- Determine the extent of contamination.
- Provide information for calculating the length of time that contamination will exist in the area.
- Determine the effectiveness of decontamination measures.

NOTE

This chapter presents a brief introduction to specific radiac instruments you may use. Detailed information on this subject is found in the *Naval Ships' Technical Manual* (*NSTM*), chapter 070.

TYPES OF RADIAC INSTRUMENTS

The detection of nuclear radiation is of vital importance to personnel. Serious injury or death can result from exposure to sufficient quantities of these invisible rays and particles. In considering the effects on personnel exposed to radiation, we need two kinds of information:

1. The intensity of the radiation field
2. The total dose or quantity of radiation received per exposure or time interval

"INTENSITY" may be defined as the strength of the radiation. It is expressed as a quantity of radiation per unit of time. The quantity unit used is the roentgen or the rad, and the time unit is usually the hour. Therefore, you need to remember the following:

- INTENSITY is expressed as roentgens per hour (R/hr) or as rads per hour (rad/hr).
- DOSAGE is expressed in two values: the EXPOSURE DOSE, measured in roentgens, and the ABSORBED DOSE, measured in rads.

NOTE

A **roentgen** is a unit of radiation dosage equal to the quantity of ionizing radiation that will produce one electrostatic unit of electricity in one cubic centimeter of dry air at 0° Centigrade and standard atmospheric pressure.

A **rad** is a unit of energy absorbed from ionizing radiation, equal to 100 ergs per gram of irradiated material. An added factor in the use of a rad is that it expresses the dose from any type of radiation, whereas the roentgen relates only to gamma radiation or X rays.

Information on intensity and dosage is essential in measuring the extent and degree of radiological contamination. It permits the calculation of safe entry time and stay time for personnel in contaminated areas. Also, it provides an objective means for withdrawing personnel when they are nearing the critical point of radiation exposure. Finally, it is useful in anticipating the severity of radiation sickness. Data needed for these and other calculations can be gathered by various radiac instruments.

No hand-held RADIAC available for military use can measure both radiation intensity and dose. Therefore, separate instruments must be used to make the different types of measurements. These devices are as follows:

- DOSE RATE, or SURVEY METER—The device that measures radiation intensity is called a dose rate, or survey, meter. This device provides the information needed to calculate the radiological hazards of occupying a contaminated area or handling contaminated equipment. It also provides the information necessary to calculate the approximate length of time personnel can safely remain in a radiological contaminated area.

- DOSIMETER—The device that measures the total radiation received by an individual is called a dosimeter. Medical officers must have dose information to predict the severity of radiation sickness, to make the prognosis, and to provide appropriate medical treatment.

The two types of radiation detection and measuring instruments may be compared to automobile speedometers and odometers (mileage indicators). The dose rate, or survey, meter measures the intensity of radiation in R/hr or rad/hr like the speedometer indicates the speed of an automobile in miles per hour. The dosimeter measures the total exposure in R or in rad, without regard to time. Therefore, it is like the odometer that records the total distance traveled in miles without regard to time.

Fixed RADIAC systems are installed on most Navy combatants. The instruments provide information on gamma dose rates at the location of the detector and at the main readout installations, usually the bridge area and DCC (Damage Control Central). The information from these instruments may be used to estimate the dose rates at locations on the ship other than the bridge.

SURVEY METERS

The Navy has radiac instruments that can be used to detect or measure certain types of radiation. The following sections discuss the survey meters currently used by the Navy.

AN/PDR-27

The AN/PDR-27 (series J through S) shown in figure 11-1 is a portable, watertight, battery-powered, low-range survey radiac. Two Geiger-Mueller (GM) tubes are mounted in an extendable probe. A spare GM tube set is included in the carrying case. The probe is fitted with a beta shield. Six alkaline D-cell batteries (BA-3030/u) power the unit. If the alkaline batteries are unavailable, you may use carbon-zinc, D-cell batteries (BA-30). The AN/PDR-27 provides both visual and audible indications of gamma and beta radiation levels. The visual indication is shown on a meter. The audible indication is heard through a headset. The radiation measurement is in milliroentgens per hour (mR/hr). The unit is capable of detecting and measuring gamma radiation when the beta shield is in place. It is also capable of detecting beta and gamma radiation simultaneously when the beta shield is removed. There are four linear scales on the AN/PDR-27. The scales are 0 to 0.5 mR/hr, 0 to 5 mR/hr, 0 to 50 mR/hr, and 0 to 500 mR/hr. Beta radiation can be detected on the lower two scales only. The -27 can detect and measure gamma, but it can only detect beta.

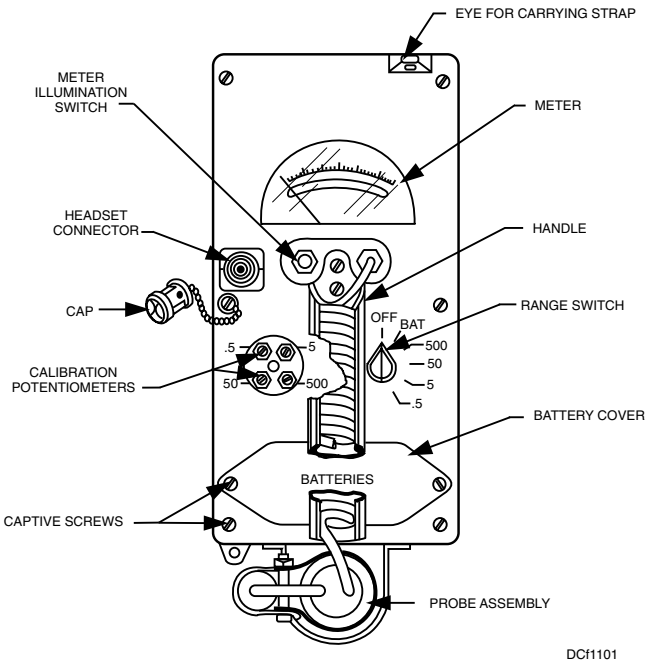

Figure 11-1. AN/PDR-27S radiac meter.

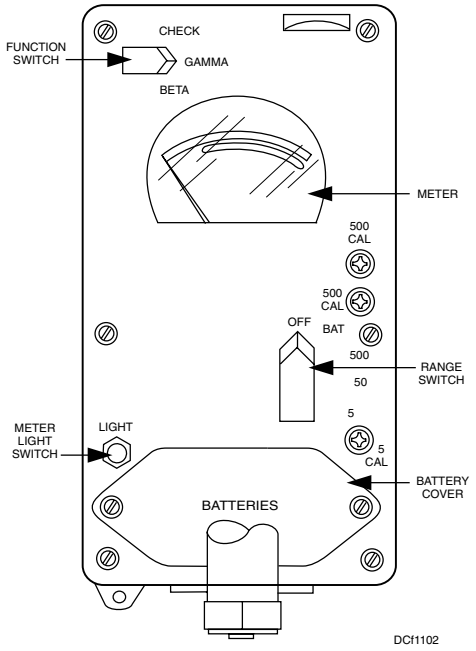

Figure 11-2. AN/PDR-43F radiac meter.

AN/PDR-43

The AN/PDR-43 shown in figure 11-2 is a battery-powered, high-range, beta-gamma RADIAC set used for low- and high-level surveys and, in some cases, personnel monitoring. It uses a GM detector and has a built-in Krypton-85 source to check for proper operation on all three operating ranges: 0-5 R/hr (gamma), 0-50 R/hr (gamma), and 0-500 R/hr (gamma). GM detectors, such as the AN/PDR-43 adjust quickly to changes in the level of radiation intensity. Even when shifting to a different range scale, only 1 second is required for meter adjustment. At intensities above 500 R/hr, the meter pegs but does not become saturated. It is calibrated to an accuracy of ±20 percent.

AN/PDR-65

The AN/PDR-65 shown in figure 11-3 is designed to detect and measure gamma radiation. The set consists of two primary elements as follows:

1. The DETECTOR UNIT. The detector unit must be located at or near a masthead. The field of view for the detector of an enveloping base surge cloud and resultant fallout must be relatively unobscured. As a result, if suitable scaling factors are available, gamma dose rates at any location inside the ship can be estimated from the masthead radiation intensity data.

2. The RADIAC METER. The radiac meter is installed on the bridge. One or more auxiliary readouts are located in DCC and other prime locations. The radiac meter has two types of displays—one is for dose rate and the other is for accumulated dose. The primary meter displays the dose rate. The small counter registers the accumulated dose in rads by counting the rad pulses from the detector. Each time a dose of 1 rad is accumulated, the radiac meter sounds a loud beep. The range of the small counter is 0 to 9,999 rad. Gamma intensity is indicated on one of the following four ranges: 0 to 10 rad/hr, 0 to 100 rad/hr, 0 to 1,000 rad/hr, and 0 to 10,000 rad/hr.

For normal operation, the AN/PDR-65 is powered by the 115-volt alternating current (vac) ship's power. In an emergency, the radiac operates on four internal, rechargeable, nickel-cadmium, C-cell batteries, which are on floating charge. The batteries can power the radiac for approximately 20 hours.

Dosimeters

A number of types of radiation dose-indicating devices (dosimeters) are in the Navy radiac system. Dosimeters of interest to the Damage Controlmen are the DT-60/PD, the CP-95A/PD, the IM-9/ PD, and the IM-143/PD.

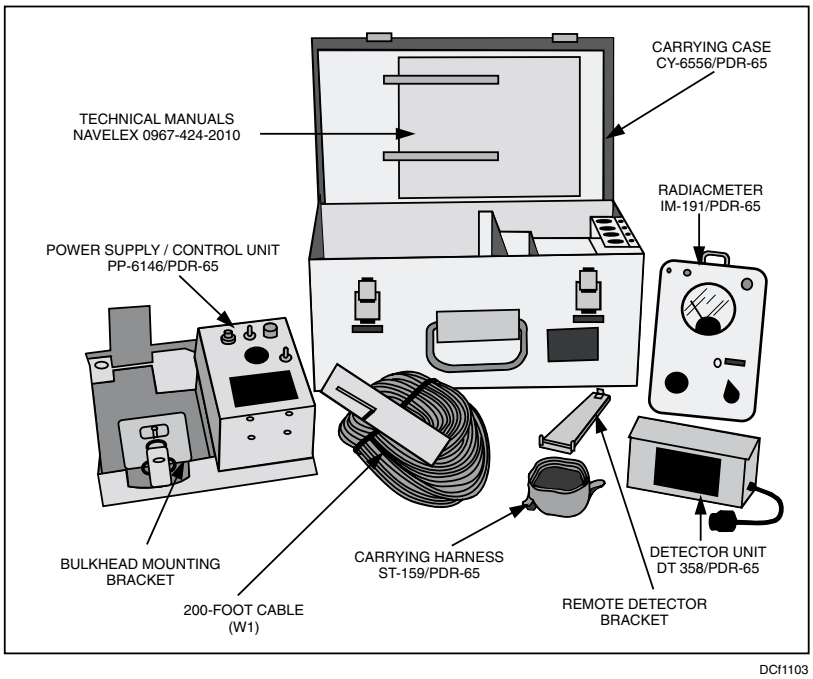

Figure 11-3. AN/PDR-65 radiac set.

DT-60/PD.—The DT-60/PD (fig. 11-4) is a gamma radiation dosimeter with a usable range of 10 to 600 R. The DT-60/PD is a solid-state package in the form of a locket designed to be worn on a chain around the neck. Inside the black plastic casing of the DT-60/PD is a phosphate glass. When the phosphate glass is exposed to ultraviolet light, it emits an orange light. The intensity of the orange light is proportional to the amount of radiation the glass has received. The DT-60/PD stores the dose information indefinitely and is a permanent record of the amount of exposure to radiation.

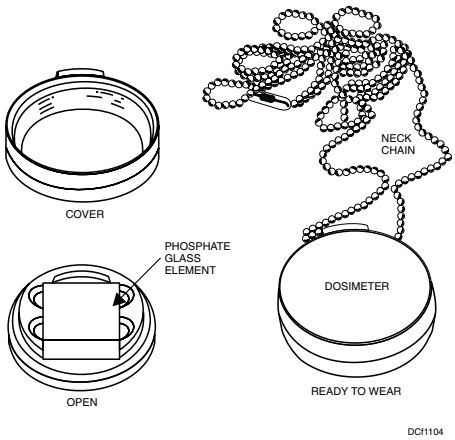

Figure 11-4. High range or casualty dosimeter (non-self-reading) DT-60/PD.

CP-95A/PD.—The CP-95A/PD (fig. 11-5) is a radiac computer-indicator that is used to read the amount of radiation a DT-60/PD has been exposed to. The cover on the DT-60/PD must be removed before the DT-60/PD is inserted into the radiac computer-indicator. Each of these radiac computer-indicators has two scales: 0 to 200 R and 0 to 600 R. However, 10 R is the minimum detectable exposure. These units have an accuracy rate of ±20 percent. The radiac computer-indicators operate off the ship's 115 vac power source.

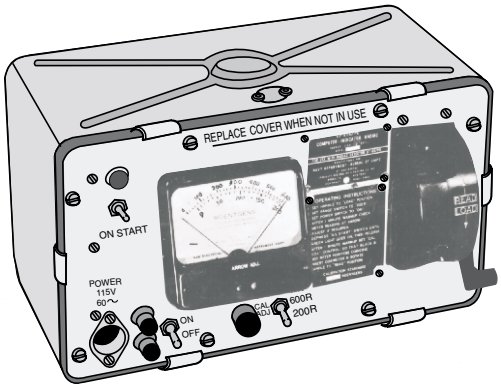

Figure 11-5. Radiac computer-indicator CP-95A/PD.

IM-9/PD.—The IM-9/PD (series E through H) is a self-reading pocket dosimeter of the quartz-fiber type. This unit indicates the gamma radiation dose in the range of 0 to 200 mR. By holding the dosimeter up to the light and looking through the lens (fig. 11-6), you can read the radiation dose received. The reading is obtained by observing the position of the quartz fiber

on the scale of the built-in optical system. The IM-9/PD is primarily a health-physics device that is particularly useful in areas of low dose rates.

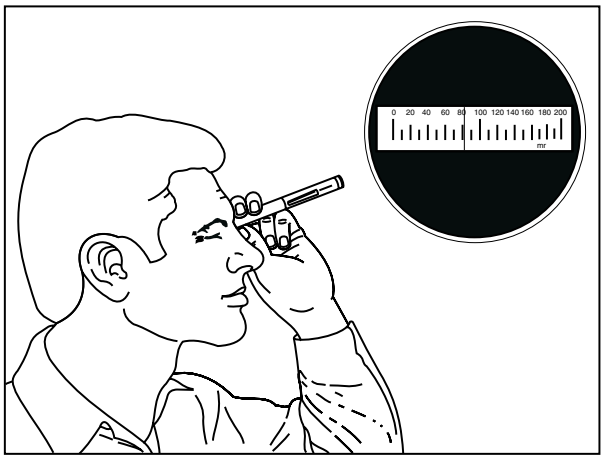

DCf1106

Figure 11-6. Method of reading IM-9/PD dosimeter by looking through it at the light. Inset shows a dose reading of 82 mR.

M-143/PD.—The IM-143/PD is identical to the IM-9/PD except in range. The IM-143/PD indicates gamma radiation dose in the range of 0 to 600 R. It is used by repair locker personnel that are involved with the survey, monitoring, and decontamination details during CBR evolutions. It keeps track of the dose they have received up to the time they read the dosimeter.

The PP-4276A/PD dosimeter charger (fig. 11-7) is used to reset the self-reading dosimeters to zero. This action is accomplished by placing the dosimeter into the charger. The charger provides an adjustable voltage source that is applied between the central wire and shell. Because the quartz fiber and the fixed central wire of the ion chamber are attached, each will receive the same charge. As a result, when the dosimeter is charged, the movable fiber is repelled from the fixed wire. By proper adjustment of the voltage applied by the charger, the fiber can be set exactly on the zero line of the scale. The power source for the PP-4276A/PD is one alkaline D-cell battery. When you charge a dosimeter with the PP-4276A/ PD, use the following procedures:

- Remove the dust cover from the charger receptacle.
- Place the electrode end of the dosimeter into the charging receptacle and depress it firmly. This illuminates the dosimeter scale and operates the charger.
- Rotate the charging knob until the hairline on the meter scale is located on the zero mark.
- Remove the dosimeter from the charger and check to ensure that it is still on zero.
- Replace the dust cover on the charger.

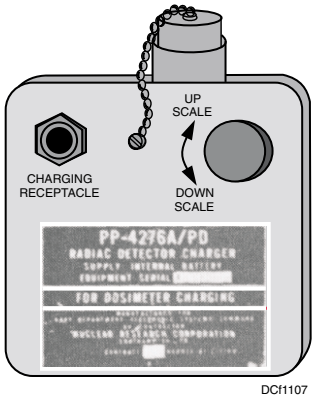

DCf1107

Figure 11-7. Dosimeter charger PP-4276A/PD.

LIMITATIONS OF RADIAC INSTRUMENTS

RADIAC equipment can detect and measure nuclear radiation; however, these instruments do have some limitations. None of the instruments are capable of detecting and measuring beta and gamma radiation at the same time. Even those that can detect both beta and gamma radiation do not automatically separate these two types of radiation. Instead, the operator keeps beta particles from entering the chamber by manually pulling a *beta shield* over the thin window in order to get a *gamma* reading only. Otherwise, you would get a combined reading.

CALIBRATION AND REPAIR OF RADIAC EQUIPMENT

RADIAC equipment aboard ship is checked as required by the *Ships' Maintenance and Material Management (3-M) Manual*. Ashore, radiac equipment is checked at least once each month or at intervals specified by the applicable technical manual. This check is accomplished according to instructions contained in the operator's section of the technical manual. RADIAC equipment must be temporarily transferred at regular intervals by shore activities to a radiac repair facility for maintenance and calibration. Ships, as far as practical within their operating schedules, also must transfer their radiac instruments to repair facilities for maintenance and calibration. When equipment requiring outside maintenance is found to be inoperative or is suspected of malfunctioning, it should be sent to the radiac repair facility immediately.

WARNING

Extreme care must be taken when performing routine maintenance on radiac instruments. Some of the instruments have complicated electronic circuits that can carry high voltages, which can present a hazardous condition for personnel. Other instruments contain radioactive material inside that presents a potential hazard if untrained personnel disassemble them. Remember that all radiac equipment that operates on direct current is designed so you can replace the batteries without exposing the internal circuitry or making the radiation hazard more dangerous.

The following checks should be made at least monthly:

- Battery check.
- Function check.
- Ensure instrument is turned off.
- Ensure instrument is stored in a cool, dry place. You may change the batteries for the radiac if they are weak. However, changing batteries does not eliminate the need for routine maintenance.

REVIEW QUESTIONS

Q1. Nuclear radiation cannot be detected by any of the five senses.

1. True
2. False

Q2. Which of the following is NOT a performance function of a radiac device?

1. Detect beta and gamma radiation
2. Measure the intensity of radiation
3. Measure radiation dose
4. Detect neutron and X-ray radiation

Q3. The AN/PDR-43 unit has three-meter scales.

1. True
2. False

Q4. What is the maximum amount of time the AN/PDR-65 will operate on fully charged batteries?

1. 10 hours
2. 20 hours
3. 30 hours
4. 40 hours

Q5. The DT-60/PD is a gamma radiation dosimeter with a usable range of 10 to 600R.

1. True
2. False

Q6. No hand-held radiac available for military use will measure both radiation intensity and dose.

1. True
2. False

RADIOLOGICAL SURVEYS

Learning Objective: Recall the different types of radiological surveys.

Radiological surveys are one of the key elements that provide the ship's personnel information needed for the recovery phase of operations. Radiological surveys are taken to determine radiation levels and deposition patterns after the ship has been contaminated by nuclear fallout.

There are several different types of surveys. It is essential that the exact time and location of each measurement is recorded and that the serial number of the RADIAC instrument used is indicated. The Radiological Survey Form shown in table 11-1 provides a format that can be used to record measurements from any type of survey.

Survey data is used to accomplish some critical tasks. These tasks include the following:

1. Detection of intrusion of radiological contamination into the interior of the ship.
2. Calculation of safe stay times for personnel at vital stations and on decontamination or monitoring teams.
3. Identification of topside locations that may require decontamination.

Table 11-1. Radiological Survey Form

SHIP: TYPE SURVEY: ROUTE NUMBER: SHEET NUMBER: EXIT:	DATE: MONITOR: INSTRUMENT TYPE: INSTRUMENT SERIAL: REENTRY:

NUMBER	AREA/OBJECT	TIME	METER READING/INDICATION		
			POSITION	SHIELD OPEN	SHIELD CLOSED

INSTRUCTIONS:

1. Routes to be established in advance.
2. Do not record RADIAC measurements in SHIELD OPEN column. Enter either BETA or NO BETA.
3. Time of wipe test is the time measurement is made, not time sample was taken.
4. Do not record a gamma (SHIELD CLOSED) measurement on an uncontrolled wipe test. If there is removable contamination (RC), enter RC. If there is none, enter NO RC. Do not record a beta (SHIELD OPEN) measurement on either type of wipe test, only RC or NO RC.
5. POSITION column notations indicate location at which measurement is taken: 3' ABOVE DECK to indicate waist height area monitoring; OPERATOR to indicate normal watchstander position at waist height; CONTROLLED WIPE TEST and UNCONTROLLED WIPE TEST to indicate wipe samples.
6. Readings may fluctuate as RADIAC instrument is rotated through various orientations at the same position. Always record highest measurement obtained.
7. Leave at least two blank rows to record hot spots along survey route.

ON-STATION MONITORING

Before the cessation of fallout, all stations that have portable radiac instruments shall monitor and report gamma intensities at time intervals directed by the damage control assistant. This information is used in determining when fallout ceases and in estimating accumulated doses at these locations. The same instrument shall be used for all measurements at a given location during on-station monitoring. The instrument shall be held at the same place and in the same position for each measurement. Beta checks shall also be conducted during on-station monitoring to determine if any contamination has infiltrated into the ship.

NOTE

Safe stay-time calculations are not valid if they are based on intensity levels measured before the fallout stops. The changes in intensity from that time on are due to radioactive decay and are therefore predictable.

RAPID INTERNAL SURVEY

The rapid internal survey shown in table 11-2 is performed immediately after the cessation of fallout to get an indication of the severity of the radiation hazard at specific locations, primarily action stations. Safe stay times for interior vital stations can be calculated based on the rapid internal survey. These locations include vital stations inside the ship and the closest interior points to topside vital stations. The locations to be surveyed shall be designated in the ship's chemical, biological, and radiological (CBR) defense bill. They should be precisely identified and marked to ensure uniformity among measurements taken at different times. Survey routes can be preprinted using the format provided in and as enclosures to the CBR defense bill.

RAPID EXTERNAL SURVEY

The rapid external survey (table 11-3), sometimes referred to as the gross external survey, is conducted after the rapid internal survey to obtain more precise radiation levels at topside vital stations and at contaminated areas that are irradiating internal vital stations. As in the rapid internal survey, the focus is on getting an accurate measurement quickly at action stations and expeditiously reporting the results. Monitors do not take time to localize or mark hot spots. The team leader shall wear a self-reading pocket dosimeter on his outer clothing. Each monitoring team shall be given a predetermined route and a safe stay time based on the highest estimated topside intensity. Large masses of material, such as superstructure, boats, and aircraft, act as shields for gamma radiation from hot spots and should be used when planning routes for protection from hot spots.

SUPPLEMENTARY SURVEYS

Supplementary surveys (survey sheet shown in table 11-4) are conducted to confirm or revise stay time calculations. They may also be ordered to localize hot spots for decontamination. Supplementary surveys of interior spaces shall include beta monitoring to detect intrusion of contamination. These checks shall be scheduled as needed for individual vital stations or other locations based on the following:

1. Completion of decontamination or air purge.
2. Dosimeter measurements that are at a variance with predicted doses.
3. Watch section rotation.

DETAILED SURVEYS

In a detailed survey, accuracy is more important than speed. Monitors shall proceed slowly and carefully. A detailed survey of the entire exterior is required before arrival at a repair facility if industrial decontamination has been ordered. The commanding officer may order a detailed survey at any time if the tactical situation permits. He can order a ship-wide detailed survey or limit it to specific areas in which relatively high radiation levels have been found. A detailed survey is recommended for any area in which measured dosages exceed predicted levels by more than 25 percent.

An example of a detailed survey form is provided in table 11-5. The grid map method is used to record results of this survey. The grid map is formed by dividing the ship into grid squares measuring 1 square yard. Each square is surveyed in the center at waist height. The preparation of detailed survey forms is not required unless the ship is ordered to an industrial facility and a detailed survey is directed.

Table 11-2. Sample Rapid Internal Survey Form

SHIP:	USS JEFFERSON	DATE:	
TYPE SURVEY:	Rapid Internal	MONITOR:	
ROUTE NUMBER:	2	INSTRUMENT TYPE:	
SHEET NUMBER:	1 of 1	INSTRUMENT SERIAL:	
EXIT:	N/A	REENTRY:	N/A

NUMBER	AREA/OBJECT	TIME	METER READING/INDICATION		
			POSITION	SHIELD OPEN	SHIELD CLOSED
1	CCA #1		3' above deck, 3' inboard of entrance		
2	DECON STATION #1		3' above deck, 3' aft of entrance		
3	MOUNT 52		3' below red circle on overhead		
4	CIC SUPERVISOR CONSOLE		OPERATOR		
5	BRIDGE RADAR REPEATER		OPERATOR		
6	CAPTAIN'S CHAIR		OPERATOR		
7	HELM		OPERATOR		

INSTRUCTIONS:

1. Routes to be established in advance.
2. Do not record RADIAC measurements in SHIELD OPEN column. Enter either BETA or NO BETA.
3. Time of wipe test is the time measurement is made, not time sample was taken.
4. Do not record a gamma (SHIELD CLOSED) measurement on an uncontrolled wipe test. If there is removable contamination (RC), enter RC. If there is none, enter NO RC. Do not record a beta (SHIELD OPEN) measurement on either type of wipe test, only RC or NO RC.
5. POSITION column notations indicate location at which measurement is taken: 3' ABOVE DECK to indicate waist height area monitoring; OPERATOR to indicate normal watchstander position at waist height; CONTROLLED WIPE TEST and UNCONTROLLED WIPE TEST to indicate wipe samples.
6. Readings may fluctuate as RADIAC instrument is rotated through various orientations at the same position. Always record highest measurement obtained.
7. Leave at least two blank rows to record hot spots along survey route.

Table 11-3. Sample Rapid External Survey Form

SHIP: USS JEFFERSON COUNTY TYPE SURVEY: Rapid External ROUTE NUMBER: 3 SHEET NUMBER: 1 of 1 EXIT: Door 02-60-4, Port Side 02 Level Aft of Bridge	DATE: MONITOR: INSTRUMENT TYPE: INSTRUMENT SERIAL: REENTRY: Door 1-110-5, Main Deck Stbd Side Entrance to Decon #2

NUMBER	AREA/OBJECT	TIME	METER READING/INDICATION		
			POSITION	SHIELD OPEN	SHIELD CLOSED
1	Port Bridge Wing		3' above deck, 3' outboard of door		
2	Port Gyro Repeater		Uncontrolled Wipe Test		
3	Flying Bridge		3' above deck, centerline		
4	Gyro Repeater on Flying Bridge		Uncontrolled Wipe Test		
5	Machine Gun		Operator		
			Uncontrolled Wipe Test		
6	Stbd Bridge Wing		3' above deck, 3' outboard of door		

INSTRUCTIONS:

1. Routes to be established in advance.
2. Do not record RADIAC measurements in SHIELD OPEN column. Enter either BETA or NO BETA.
3. Time of wipe test is the time measurement is made, not time sample was taken.
4. Do not record a gamma (SHIELD CLOSED) measurement on an uncontrolled wipe test. If there is removable contamination (RC), enter RC. If there is none, enter NO RC. Do not record a beta (SHIELD OPEN) measurement on either type of wipe test, only RC or NO RC.
5. POSITION column notations indicate location at which measurement is taken: 3' ABOVE DECK to indicate waist height area monitoring; OPERATOR to indicate normal watchstander position at waist height; CONTROLLED WIPE TEST and UNCONTROLLED WIPE TEST to indicate wipe samples.
6. Readings may fluctuate as RADIAC instrument is rotated through various orientations at the same position. Always record highest measurement obtained.
7. Leave at least two blank rows to record hot spots along survey route.

Table 11-4. Sample Supplementary Survey Form

SHIP: USS THOMAS TYPE SURVEY: Supplementary Survey ROUTE NUMBER: 1 SHEET NUMBER: 1 of 2 EXIT:	DATE: MONITOR: INSTRUMENT TYPE: INSTRUMENT SERIAL: REENTRY:

NUMBER	AREA/OBJECT	TIME	METER READING/INDICATION		
			POSITION	SHIELD OPEN	SHIELD CLOSED
1	Crew's Mess Galley Compt. 2-90-2		3' above deck, highest reading in compt.		
2	Crew's Mess Scullery Compt. 2-90-2		3' above deck, highest reading in compt.		
3	Crew's Mess Dining Area Compt. 2-70-2		3' above deck, highest reading in compt.		
4	Crew's Berthing Compt. 3-110-0		3' above deck, highest reading in compt.		
5	Crew's Head Compt. 3-110-1		3' above deck, highest reading in compt.		
6	Crew's Head (Decon 2) Compt. 1-120-2		3' above deck, highest reading in compt.		
7	Crew's Head (Decon 2) Compt. 1-120-2		Controlled Wipe Test, shower controls		

INSTRUCTIONS:
1. Routes to be established in advance.
2. Do not record RADIAC measurements in SHIELD OPEN column. Enter either BETA or NO BETA.
3. Time of wipe test is the time measurement is made, not time sample was taken.
4. Do not record a gamma (SHIELD CLOSED) measurement on an uncontrolled wipe test. If there is removable contamination (RC), enter RC. If there is none, enter NO RC. Do not record a beta (SHIELD OPEN) measurement on either type of wipe test, only RC or NO RC.
5. POSITION column notations indicate location at which measurement is taken: 3' ABOVE DECK to indicate waist height area monitoring; OPERATOR to indicate normal watchstander position at waist height; CONTROLLED WIPE TEST and UNCONTROLLED WIPE TEST to indicate wipe samples.
6. Readings may fluctuate as RADIAC instrument is rotated through various orientations at the same position. Always record highest measurement obtained.
7. Leave at least two blank rows to record hot spots along survey route.

Table 11-5. Sample Detailed Survey Form

SHIP: USS BROWN TYPE SURVEY: Detailed Survey ROUTE NUMBER: 1 SHEET NUMBER: 1 of 10 EXIT: Entrance to Decon #1 Door 1-40-4	DATE: MONITOR: INSTRUMENT TYPE: INSTRUMENT SERIAL: REENTRY: Entrance to Decon #1 Door 1-40-4

NUMBER	AREA/OBJECT	TIME	METER READING/INDICATION		
			POSITION	SHIELD OPEN	SHIELD CLOSED
1	Foc'sle		Frame 1 Centerline		
2	Foc'sle		Frame 2 Port Side		
3	Foc'sle		Frame 2 Stbd Side		
4	Foc'sle		Frame 3 Port Side		
5	Foc'sle		Frame 3 Centerline		
6	Foc'sle		Frame 3 Stbd Side		
7	Anchor Windlass		Controlled Wipe Test		

INSTRUCTIONS:

1. Routes to be established in advance.
2. Do not record RADIAC measurements in SHIELD OPEN column. Enter either BETA or NO BETA.
3. Time of wipe test is the time measurement is made, not time sample was taken.
4. Do not record a gamma (SHIELD CLOSED) measurement on an uncontrolled wipe test. If there is removable contamination (RC), enter RC. If there is none, enter NO RC. Do not record a beta (SHIELD OPEN) measurement on either type of wipe test, only RC or NO RC.
5. POSITION column notations indicate location at which measurement is taken: 3' ABOVE DECK to indicate waist height area monitoring; OPERATOR to indicate normal watchstander position at waist height; CONTROLLED WIPE TEST and UNCONTROLLED WIPE TEST to indicate wipe samples.
6. Readings may fluctuate as RADIAC instrument is rotated through various orientations at the same position. Always record highest measurement obtained.
7. Leave at least two blank rows to record hot spots along survey route.

REVIEW QUESTIONS

Q7. When is on-station monitoring conducted?

1. After cessation of fallout to report gamma intensities
2. Before cessation of fallout to report gamma intensities
3. After cessation of fallout to report alpha contamination
4. Before cessation of fallout to report alpha contamination

Q8. Which survey is sometimes referred to as the gross external survey?

1. Rapid external survey
2. Extensive external survey
3. Basic external survey
4. Precise external survey

Q9. Which of the following terms best describes a type of survey that is recommended for any area in which measured radiation dosages exceed predicted levels by more than 25 percent?

1. *Simple survey*
2. *Intensive survey*
3. *Detailed survey*
4. *Advanced survey*

RADIOLOGICAL EXPOSURE CONTROL

Learning Objective: Recall the different types of exposure control.

Exposure control is the actions required to minimize the spread of contamination to personnel and the shipboard environment. The objective is to limit the total dose received by individuals from both internal and external sources and to minimize the transfer of contamination into the interior of the ship. Onboard your ship you will have a chemical, biological, and radiological (CBR) defense bill, which will have routes, used to minimize and control exposure. Other means of exposure control are protective shielding, ready shelter and deep shelter, which will be described in the following paragraphs.

PROTECTIVE SHIELDING

Protective shielding is one method of defense against nuclear radiation. The tremendous penetrating power of gamma rays makes it difficult to provide enough shielding to protect personnel from gamma rays. However, the structure of the ship provides some protection. The main materials likely to provide shielding aboard ship are steel plating, piping, machinery, water, fuel oil, and perhaps wood. Shielding materials at shore facilities also include concrete and earth.

The amount of shielding required to stop gamma rays is measured in half-value layer thicknesses or "half-thicknesses," for short. A "half-thickness" is defined as the amount of material necessary to cut down the amount of radiation to one-half of its original value. The half-thickness for each material is different. For example, a concrete shield about 6 inches thick or an earth shield about 7 1/2 inches thick will cut the gamma radiation in half. Suppose that you are in a place where the gamma radiation exposure is 400 roentgens. If you are behind a half-value layer thickness at the time, you will receive a dose of 200 roentgens. Now suppose you are standing behind two shields, each of which is a half-thickness. The 400 roentgens of gamma radiation is reduced to 200 roentgens by the first half-thickness and then to 100 roentgens by the second half-thickness. With each additional half-thickness shield, you reduce the remaining gamma radiation by half. Remember that these thicknesses do not stop gamma radiation completely; instead, each cuts it in half. In a nuclear attack, one half-thickness of steel or concrete might be enough shield to keep you from getting a lethal dose of gamma radiation.

The estimated half-thicknesses of some materials are shown below. Note that initial radiation is more penetrating than residual radiation and requires a larger thickness to reduce the radiation to one-half of its original value. These materials are listed in the order of their effectiveness as shields against gamma radiation.

MATERIAL	INITIAL	RESIDUAL
Steel	1.5 inches	0.7 inch
Concrete	6.0 inches	2.2 inches
Earth	7.5 inches	3.3 inches
Water	13.0 inches	4.8 inches
Wood	23.0 inches	8.8 inches

READY SHELTER

If the ship is warned enough in advance, personnel topside shall be ordered to ready shelter before the arrival of the base surge or fallout. Taking ready shelter is both a contamination avoidance measure and a radiation mitigation technique. The locations are generally not deep enough within the ship's structure to result in much reduction of gamma radiation. However, alpha and beta radiation cannot penetrate into the ship.

DEEP SHELTER

Deep shelter locations are compartments in the innermost parts of the ship. Because of distances and the structural material between these compartments, the gamma exposure rate is significantly lower. All except essential personnel at the most vital stations are sent to deep shelter to minimize exposure to initial radiation. Each ship shall designate deep shelter for each battle station in the ship's CBR defense bill.

REVIEW QUESTIONS

Q10. A "half-thickness" is defined as the amount of material necessary to cut down the amount of radiation to one-half of its original value.

1. True
2. False

Q11. The objective of exposure control is to limit the total dose received by individuals from both internal and external sources and to minimize the transfer of contamination into the interior of the ship.

1. True
2. False

Q12. Exposure rate to gamma radiation is significantly lower in deep shelter locations because of distances and the structural material between compartments.

1. True
2. False

DECONTAMINATION

Learning Objective: Recall requirements for personnel in execution of the decontamination process and the basic design of the two types of decontamination stations.

Decontamination of a ship's environment and personnel is essential to the recovery of the ship. Radiological decontamination is the physical removal of the contamination that results from a nuclear weapon detonation. Much of it can be removed easily with soap and water or by brushing or using a sticky surface such as masking tape. The contaminant that remains must be removed either by abrasion (vigorous scrubbing) or by chemical means. The latter method includes using solvents other than water, such as a degreasing hand cleaner. This section establishes a technical basis and describes procedures for shipboard decontamination of personnel, clothing, and tools that have been exposed to radiological fallout. Every possible situation cannot be covered in this text. General guidance is provided that can be applied to a variety of ship arrangements. Detailed information on this subject can be found in chapter 5 of *Naval Ships' Technical Manual* (*NSTM*), chapter 070.

GOOD HYGIENE AND HOUSEKEEPING

Personal sanitation and general housekeeping are very important after a ship has been exposed to fallout. It is extremely difficult to keep all contamination out of the interior of the ship. The ship is not airtight and, unless it has a collective protection system, some airborne particles will enter either through the ventilation system, through accesses, or through leaks. Monitoring and decontamination techniques are not perfect and some contamination will be allowed in on personnel who have been topside. However, the hazard can be minimized simply by preventing it from building up. Maintaining clean conditions in living and working spaces is one part of the solution. The other is personal cleanliness. A simple practice such as washing one's hands before eating will reduce the ingestion of contamination.

DECONTAMINATION PROCESS

All personnel exposed to the weather while a ship is receiving fallout from a nuclear detonation shall reenter through a decontamination station or a contamination control area (CCA). Those who must perform duties topside after the deposition of fallout has ceased are considered to be potentially contaminated. They may be required to reenter through a decontamination station or CCA, depending on the

intensity of the radiation from the fallout remaining and its location on the ship. The basic procedures in the decontamination process are the same for all ships. Variations from ship to ship are due to differences in the design and location of decontamination stations.

The basic functions are as follows:

1. Gross decontamination of portable equipment and outer garments
2. Monitoring, removal, and disposal of outer garments
3. Monitoring, removal, and disposal of inner clothing
4. Decontamination of inner clothing
5. Body cleansing
6. Recording accumulated exposure

For detailed information on this subject, refer to *NSTM*, chapter 070.

SHIPBOARD DECONTAMINATION INSTALLATIONS

The two types of decontamination stations are as follows:

1. CONVENTIONAL DECON STATIONS. Stations that are not associated with a Collective Protection System (CPS) are referred to as conventional decontamination (decon) stations. Specific washrooms and showers designated in the ship's plans are set up for this purpose when needed.

2. CPS DECONTAMINATION STATION. Ships that have a Collective Protection System (CPS) (fig. 11-8) with Total Protection (TP) zones have a dedicated four-compartment decon station with access to the weatherdeck in each TP zone. This type of facility is referred to as a CPS decontamination station. There are differences in the extent of CPS coverage on different classes or flights of ships and even among ships of the same class or flight. It is possible for a ship with partial CPS coverage to have both CPS and conventional decon stations. For further information refer to *NSTM*, chapter 070.

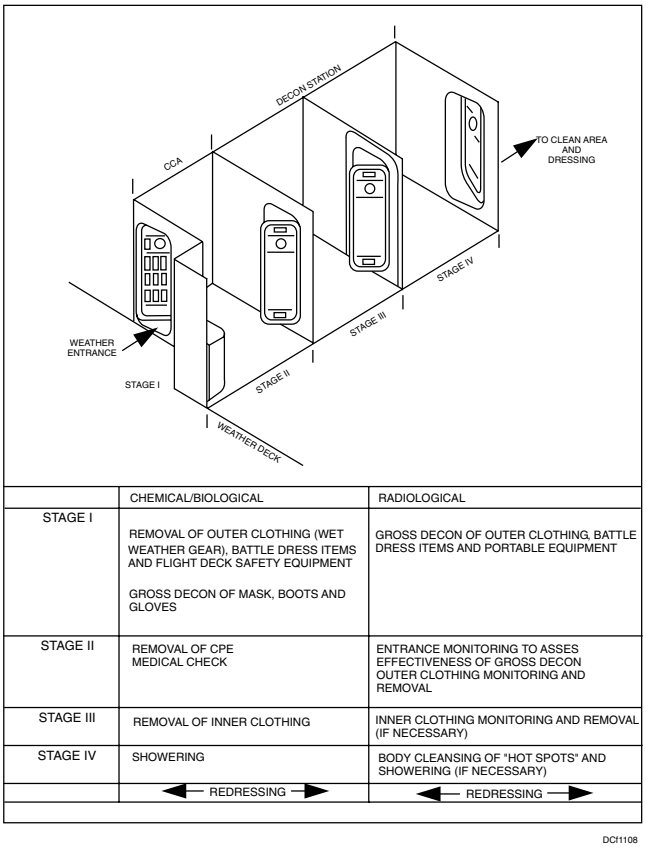

Figure 11-8. CCA/decontamination station for CPS-equipped ships.

REVIEW QUESTIONS

Q13. Radiological decontamination is the physical removal of the contamination that results from a nuclear weapon detonation.

1. True
2. False

Q14. What simple hygiene practice reduces the ingestion of contamination?

1. Washing hands
2. Shower frequently
3. Brush teeth
4. Comb hair

SUMMARY

In this chapter, you have been introduced to RADIAC instruments, radiological surveys, radiological exposure control, and personnel decontamination and shipboard decontamination installations. You will need a good understanding of the radiac instruments since you will use them in the performance of your duties if you are assigned to the radiological monitoring team. When you conduct Planned Maintenance System on the radiac instruments, look them over and review the technical manuals supplied with the instruments. Discuss your repair party chemical, biological, and radiological assignments with your Leading Petty Officer so that you can relate the information presented in this chapter to your actual assignments. Review the various sections of this chapter as necessary until you are familiar with them.

REVIEW ANSWERS

A1. Nuclear radiation cannot be detected by any of the five senses. **(1) True**

A2. Which of the following is NOT a performance function of a radiac device. **(4) Detect neutron and X-ray radiation**

A3. The AN/PDR-43 unit has three-meter scales. **(1) True**

A4. What is the maximum amount of time the AN/PDR-65 will operate on fully charged batteries? **(2) 20 hours**

A5. The DT-60/PD is a gamma radiation dosimeter with a usable range of 10 to 600R. **(1) True**

A6. No hand-held radiac available for military use will measure both radiation intensity and dose. **(1) True**

A7. When is on-station monitoring conducted? **(2) Before cessation of fallout to report gamma intensities**

A8. Which survey is sometimes referred to as the gross external survey? **(1) Rapid external survey**

A9. Which of the following terms best describes a type of survey that is recommended for any area in which measured radiation dosages exceed predicted levels by more than 25 percent? **(3)** ***Detailed survey***

A10. A "half-thickness" is defined as the amount of material necessary to cut down the amount of radiation to one-half of its original value. **(1) True**

A11. The objective of exposure control is to limit the total dose received by individuals from both internal and external sources and to minimize the transfer of contamination into the interior of the ship. **(1) True**

A12. Exposure rate to gamma radiation is significantly lower in deep shelter locations because of distances and the structural material between compartments. **(1) True**

A13. Radiological decontamination is the physical removal of the contamination that results from a nuclear weapon detonation. **(1) True**

A14. What simple hygiene practice reduces the ingestion of contamination? **(1) Washing hands**

CHAPTER 12

SHIP STABILITY AND BUOYANCY

Learning Objectives: Recall the terminology used for ship stability; the laws of physics and trigonometry used to determine stability and buoyancy of a ship; and the effects of buoyancy, gravity, and weight shifts on ship stability.

Under the guidance of the damage control assistant, damage control personnel provide the first line of defense to ensure your ship is as seaworthy as possible. Your responsibilities may include preparing daily draft reports, taking soundings, or perhaps you may stand watch operating a ballasting console.

In this chapter, you will be introduced to the laws of mathematics and physics used to determine the buoyancy and stability of a ship. Also, there are various engineering and mathematical principles that you will become familiar with as you study this chapter. Detailed information on these subjects is provided in the *Naval Ships' Technical Manual* (*NSTM*), chapter 079, volume 1, and in *NSTM*, chapter 096. You can find additional information on these subjects in publications you will find listed in the *Damage Controlman Advancement Handbook.*

PRINCIPLES OF STABILITY

Learning Objectives: Recall the basic functions of trigonometry, the terminology used for ship stability, the effects of buoyancy and gravity on ship stability, and the effects of weight shifts on ship stability.

To comprehend the principles of ship stability fully, you must have a basic understanding of trigonometry and the functions of right triangles. Generally speaking, the weight of a ship in the water is "pushing" straight down, and the seawater that it displaces is "pushing" straight back up. When no other forces are acting on the ship, all these forces cancel each other out and equilibrium exists. However, when the center of gravity moves from directly above the center of buoyancy, there is an "inclining moment." When this occurs, this force is considered to be at right angles to the forces of gravity and buoyancy. An understanding of trigonometry is required to understand the effects and results of these actions.

TRIGONOMETRY

Trigonometry is the study of triangles and the interrelationship of the sides and the angles of a triangle. In determining ship stability, only that part of trigonometry pertaining to right triangles is used. There is a fixed relationship between the angles of a right triangle and the ratios of the lengths of the sides of the triangle. These ratios are known as trigonometric functions and have been given the following names: sine, cosine, tangent, cotangent, secant, and cosecant. The three trigonometric functions required for ship stability work are the **sine**, **cosine**, and **tangent**. Figure 12-1 shows these trigonometric relations.

Sine

In trigonometry, angles are represented by the Greek letter theta (θ). The sine of an angle θ, abbreviated as $\sin \theta$, is the ratio expressed when the side of a right triangle opposite the angle θ is divided by the hypotenuse. Figure 12-1 shows these trigonometric relations.

Therefore, referring to figure 12-1:

$\sin \theta = y/r$, or the altitude (y) divided by the hypotenuse (r)

If the hypotenuse (r) is also the radius of a circle, point P moves along the circumference as the angle changes in size. As angle θ increases, side y increases in length while the length of the hypotenuse (or radius) remains the same. Therefore, the value of the sine increases as the angle increases. Changes in the value of the sine corresponding to changes in the size of the angle are shown on the sine curve shown in figure 12-2. On the sine curve, the size of the angle is plotted horizontally and the value of the sine vertically.

At any angle, the vertical height between the baseline and the curve is the value of the sine of the angle. This curve shows that the value of the sine at 30° is half of the value of the sine at 90°. At 0°, $\sin \theta$ equals zero. At 90°, $\sin \theta$ equals one.

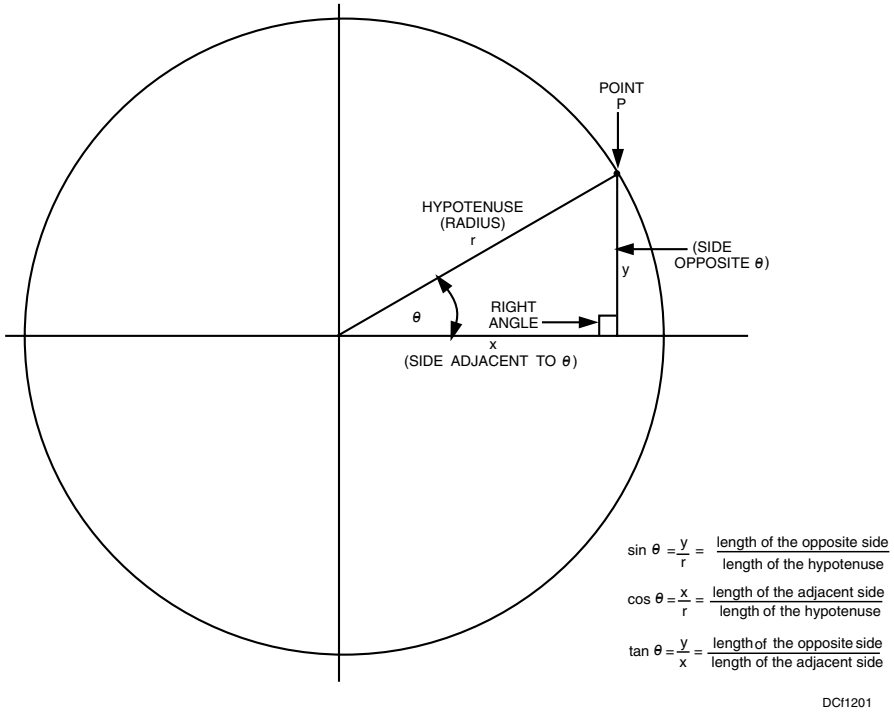

Figure 12-1. Trigonometric relationships.

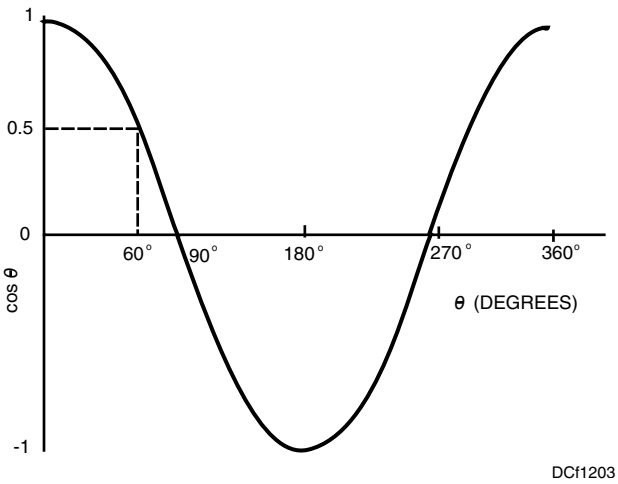

Figure 12-2. Sine curve.

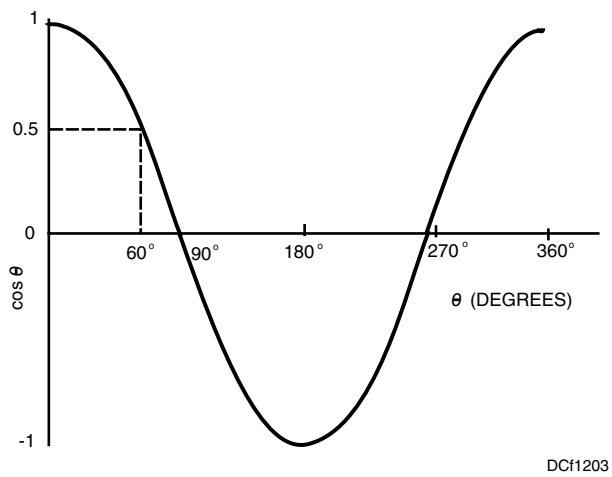

Figure 12-3. Cosine curve.

Cosine

The cosine is the ratio expressed by dividing the side adjacent to the angle θ by the hypotenuse. Therefore, referring to figure 12-1:

cos θ = x divided by r (the adjacent divided by the hypotenuse)

In contrast to the sine, the cosine decreases as the angle θ becomes larger. This relationship between the value of the cosine and the size of the angle is shown by the cosine curve shown in figure 12-3. At 0° the cosine equals one; at 90° the cosine equals zero; and at 60° the cosine is half the value of the cosine at 0°.

Tangent

The tangent of the angle θ is the ratio of the side opposite the angle θ to the side adjacent. Again, referring to figure 12-1:

Tan θ = y divided by x (the side opposite θ divided by the side adjacent θ)

PRINCIPLES OF PHYSICS

There are certain principles of physics that you need to know in order to have an adequate understanding of stability. You should be familiar with

such terms as *volume*, *density*, *weight*, *center of gravity*, *force*, and *moments*.

Volume

The volume of any object is determined by the number of cubic feet or cubic units contained in the object. The underwater volume of a ship is found by determining the number of cubic feet in the part of the hull below the waterline.

Density

The density of any material, solid or liquid, is obtained by weighing a unit volume of the material. For example, if you take 1 cubic foot of seawater and weigh it, the weight is 64 pounds or 1/35 of a ton (1 long ton equals 2,240 pounds). Since seawater has a density of 1/35 ton per cubic foot, 35 cubic feet of seawater weighs 1 long ton.

Weight

If you know the volume of an object and the density of the material, the weight of the object is found by multiplying the volume by the density. The formula for this is as follows:

W = V x D (weight = volume times density)

When an object floats in a liquid, the weight of the volume of liquid displaced by the object is equal to the weight of the object. Thus, if you know the volume of the displaced liquid, the weight of the object is found by multiplying the volume by the density of the liquid.

Example:

If a ship displaces 35,000 cubic feet of salt water, the ship weighs 1,000 tons.

W = V x D (weight = volume times density)

W = 35,000 cubic feet x 1/35 ton per cubic foot

W = 1,000 tons

Center of Gravity

The center of gravity (G) is the point at which all the weights of the unit or system are considered to be concentrated and have the same effect as that of all the component parts.

Force

A force is a push or pull. It tends to produce motion or a change in motion. Force is what makes something start to move, speed up, slow down, or keep moving against resistance (such as friction). A force may act on an object without being in direct contact with it. The most common example of this is the pull of gravity. Forces are usually expressed in terms of *weight units*, such as *pounds*, *tons*. or *ounces*.

Figure 12-4 shows the action of a force on a body. An arrow pointing in the direction of the force is drawn to represent the force. The location and direction of the force being applied is known as the line of action. If a number of forces act together on a body, they may be considered as a single combined force acting in the same direction to produce the same overall effect. In this manner you can understand that F4 in figure 12-4 is the resultant or the sum of the individual forces F_1, F_2, and F_3.

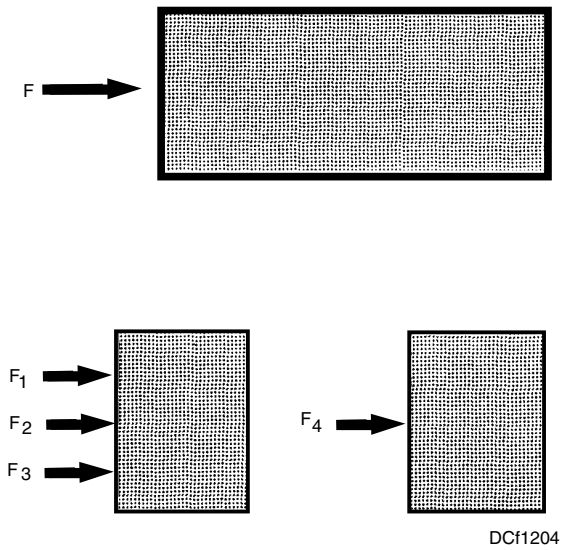

Figure 12-4. Lines indicating direction of force.

Whether you consider the individual forces F_1, F_2, and F_3, or just F_4 alone, the action of these forces on the object will move the body in the direction of the force.

To prevent motion or to keep the body at rest, you must apply an equal force in the same line of action but in the opposite direction to F_4. This new force and F_4 will cancel each other and there will be no movement; the resultant force is zero. An example of this is a Sailor attempting to push a truck that is too heavy for him to move. Although the truck does not move, force is still being exerted.

Moments

In addition to the size of a force and its direction of action, the location of the force is important. For example, if two persons of the same weight sit on opposite ends of a seesaw, equally distant from the support (fig. 12-5), the seesaw will balance. However, if one person moves, the seesaw will no longer remain balanced. The person farthest away from the support will move down because the effect of the force of his/her weight is greater.

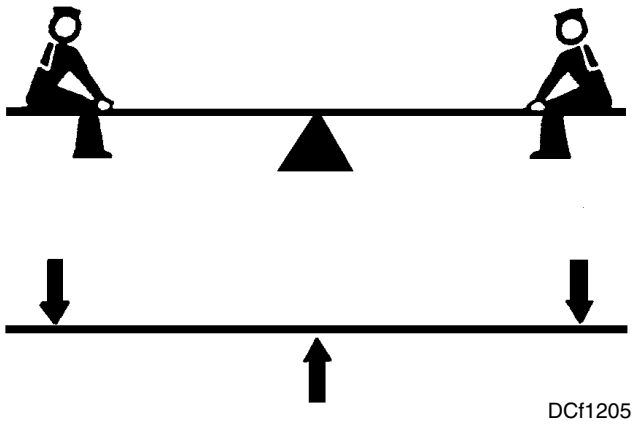

Figure 12-5. The balanced seesaw.

The effect of the location of a force is known as the MOMENT OF FORCE. It is equal to the force multiplied by the distance from an axis about which you want to find its effect. The moment of a force is the tendency of the force to produce rotation or to move the object around an axis. Since the force is expressed in terms of weight units, such as tons or pounds, and the moment is force times distance, the units for moment are expressed as foot-tons, foot-pounds, or inch-ounces.

In figure 12-6 the moment of force (F) about the axis at point a is F times d; d being called the moment arm. The moment of a force can be measured about any point or axis; however, the moment differs according to the length of the moment arm. It should be noted that the moment of a force tends to produce rotary motion. In figure 12-6, for example, the force F produces a clockwise rotation. If, at the same time, an equal and opposite force produces a counterclockwise rotation, there will be no rotation; and the body is in equilibrium.

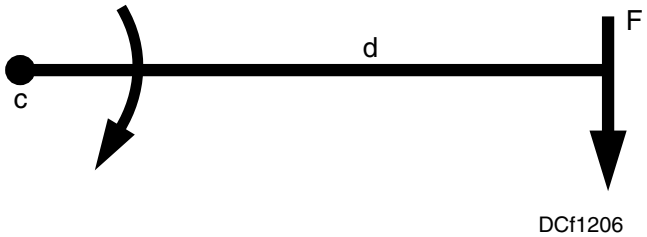

Figure 12-6. Diagram to illustrate the moment of force.

A special case of moments occurs when two equal and opposite forces not in the same line rotate a body. This system of two forces, as shown in figure 12-7, is termed a *COUPLE*. The moment of the couple is the product of one of the forces times the distance between them (fig. 12-8).

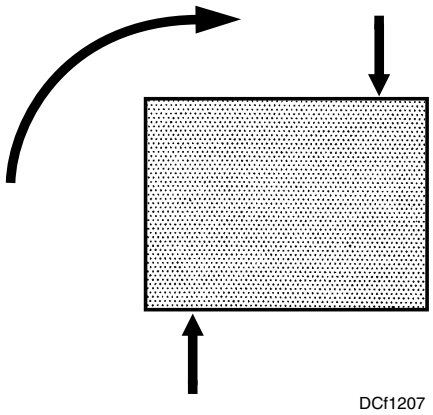

Figure 12-7. Equal and opposite forces acting on a body (not in the same line).

Calculation of the moment of the couple, as shown in figure 12-8, is as follows:

The moment of the couple = F x d

Therefore, the moment of the couple is 50 feet times 12 pounds that equals 600 foot-pounds.

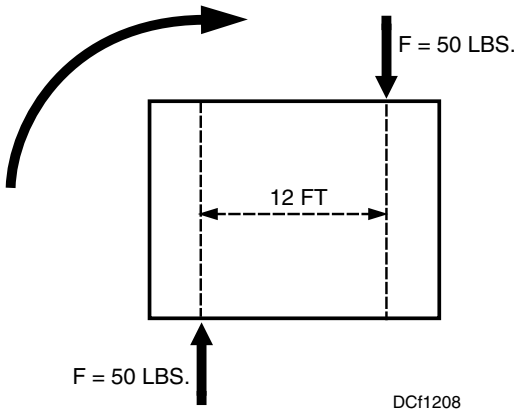

Figure 12-8. Diagram to show calculation of the moment of a couple.

In one sense, a ship may be considered as a system of weights. If the ship is undamaged and floating in calm water, the weights are balanced and the ship is stable. However, the movement of weight on the ship causes a change in the location of the ship's center of gravity, and thereby affects the stability of the ship.

Figure 12-9 shows how an INCLINING MOMENT is produced when a weight is moved outboard from the centerline of the ship. If the object weighing 20 tons is moved 20 feet outboard from the centerline, the inclining moment will be equal to 400 foot-tons (F x d, or 20 x 20).

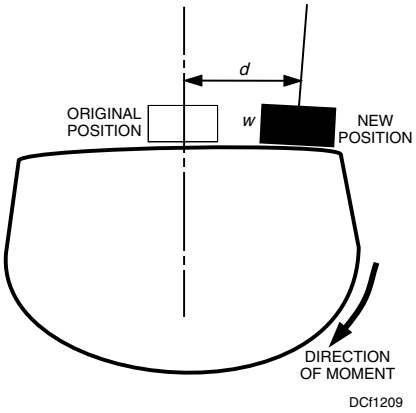

Figure 12-9. Inclining moment produced by moving a weight outboard.

Figure 12-10 shows how a forward (or aft) movement of weight produces a TRIMMING MOMENT. Let's assume that a 20-ton weight is moved 50 feet forward; the trimming moment produced is 20 x 50, or 1,000 foot-tons.

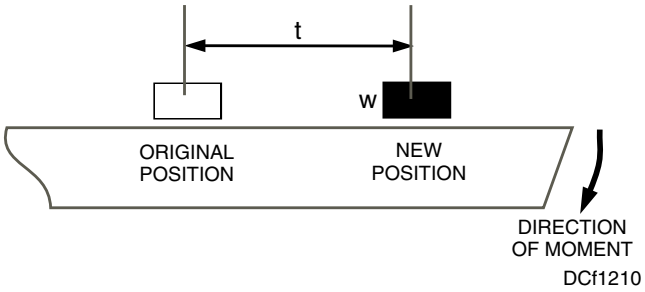

Figure 12-10. Trimming moment.

It is also possible to calculate the VERTICAL MOMENT of any part of the ship's structure or of any weight carried on board. In calculating a vertical moment, use the ship's baseline, or keel, as the axis. Figure 12-11 shows the calculation of the vertical moment of a 5-inch gun on the main deck of a ship. The gun weighs 15 tons and is located 40 feet above the keel. The vertical moment is thus 15 x 40, or 600 foot-tons.

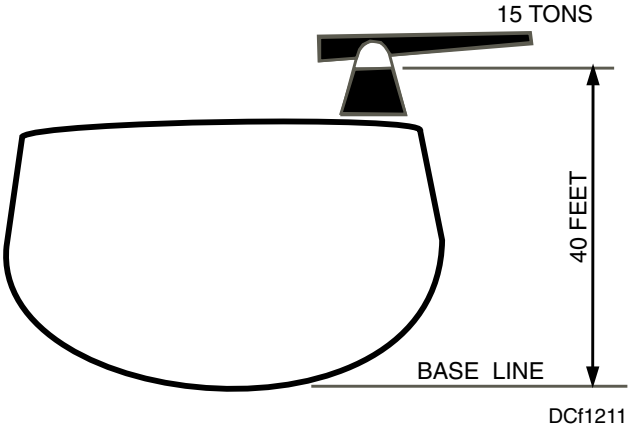

Figure 12-11. Vertical moment.

BUOYANCY VERSUS GRAVITY

"Buoyancy" may be defined as the ability of an object to float. If an object of a given volume is placed under water and the weight of this object is GREATER than the weight of an equal volume of water, the object will sink. It sinks because the FORCE that buoys it up is less than the weight of the object. However, if the weight of the object is LESS than the weight of an equal volume of water, the object will rise. The object rises because the FORCE that buoys it up is greater than the weight of the object; it will continue to rise until it is partly above the surface of the water. In this position the object will float at such a depth that the submerged part of the object displaces a volume of water EQUAL to the weight of the object.

As an example, take the cube of steel shown in figure 12-12. It is solid and measures 1 foot by 1 foot by 1 foot. If you drop the steel cube into a body of water, the steel cube will sink because it weighs more than a cubic foot of water. But if you hammer this cube of steel into a flat plate 8 feet by 8 feet, bend the edges up 1 foot all-around, and make the corner seams watertight, this 6-foot by 6-foot by 1-foot box, as shown in figure 12-12, will float. In fact, it will not only float but will, in calm water, support an additional 1,800 pounds.

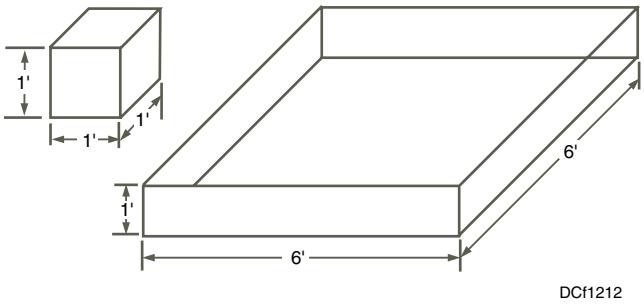

Figure 12-12. A steel cube, and a box made from the same volume of steel.

It is obvious, then, that the volume of the submerged part of a floating ship provides the buoyancy to keep the ship afloat. If the ship is at rest, the buoyancy (which is the weight of the displaced water) must be equal to the weight of the ship. For this reason, the weight of a ship is generally referred to as DISPLACEMENT, meaning the weight of the volume of water displaced by the hull.

Since weight (W) is equal to the displacement, it is possible to measure the volume of the underwater body (V) in cubic feet and multiply this volume by the weight of a cubic foot of seawater to determine what the ship weighs. This relationship may be written as the following:

(1) $W = V \times \frac{1}{35}$

(2) $V = 35W$

V = Volume of displaced seawater (in cubic feet)

W = Weight in tons

35 = Cubic feet of seawater per ton (For ships, the long ton of 2,240 pounds is used.)

It is obvious that displacement will vary with the depth of a ship's keel below the water line that is known as draft. As the draft increases, the displacement increases. This is indicated in figure 12-13 by a series of displacements shown for successive draft lines on the midship section of a ship. The volume of an underwater body for a given draft line can be measured in the drafting room by using graphic or mathematical means. This is done for a series of drafts throughout the probable range of displacements in which a ship is likely to operate. The values obtained are plotted on a grid on which feet of draft are measured vertically and tons of displacement horizontally. A smooth line is faired through the points plotted, providing a curve of displacement versus draft, or a DISPLACEMENT CURVE as it is generally called. An example of this for a typical warship is shown in figure 12-14.

To use the sample curve shown in figure 12-14 for finding the displacement when the draft is given, locate the value of the mean draft on the draft scale at the left. Then proceed horizontally across the diagram to the displacement curve. From this point proceed vertically downward and read the displacement from the scale. For example, if you have a mean draft of 26 feet, the displacement found from the curve is approximately 16,300 tons.

Reserve Buoyancy

The volume of the watertight portion of the ship above the waterline is known as the ship's reserve buoyancy. Expressed as a percentage, reserve buoyancy is the ratio of the volume of the above-water body to the volume of the underwater body. Thus reserve buoyancy may be stated as a volume in cubic feet, as a ratio or percentage, or as an equivalent weight of seawater in tons. (In tons it is 1/35 of the volume in cubic feet of the above-water body.)

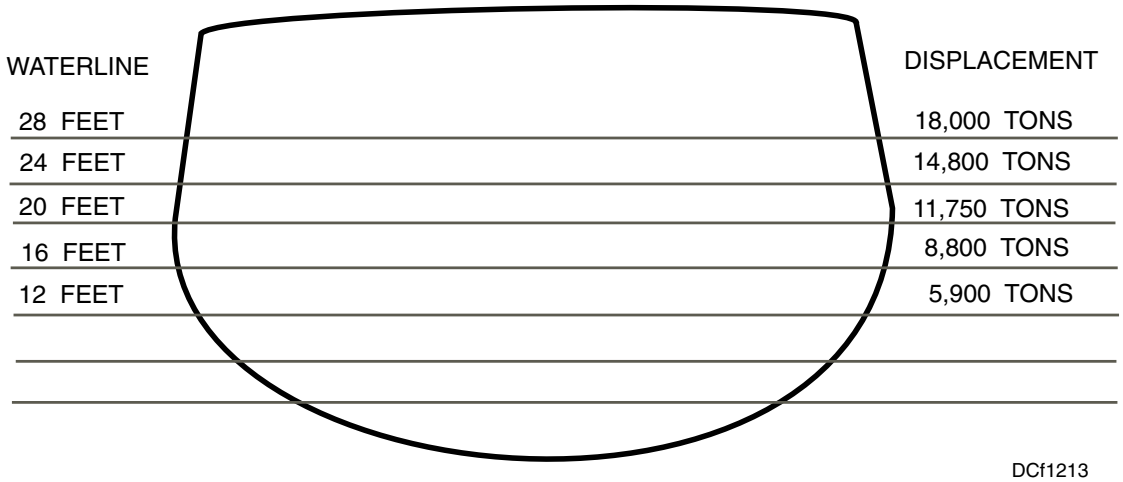

Figure 12-13. Example of displacement data.

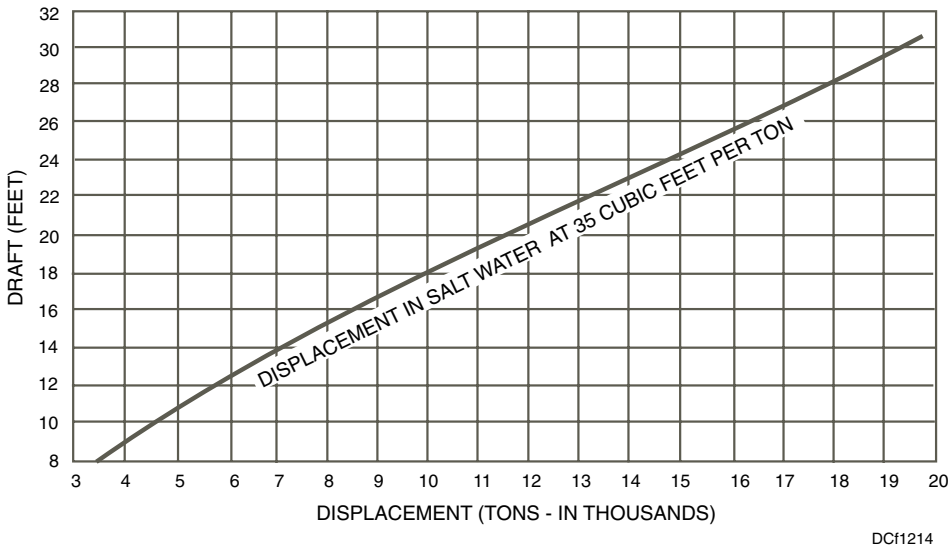

Figure 12-14. Example of a displacement curve.

Freeboard, a rough measure of reserve buoyancy, is the distance in feet from the waterline to the weather deck edge. Freeboard is calculated at the midship section. As indicated in figure 12-15, freeboard plus draft always equals the depth of the hull in feet.

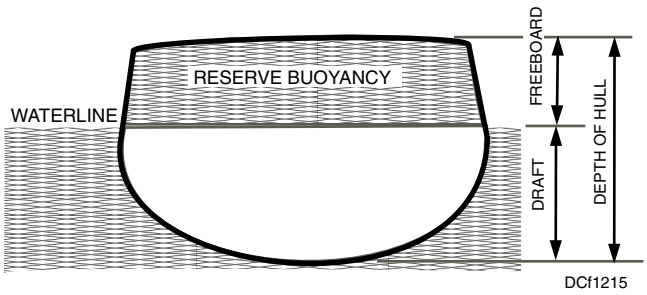

Figure 12-15. Reserve buoyancy, freeboard, draft, and depth of hull.

When weight is added to a ship, draft and displacement increase in the same amount freeboard and reserve buoyancy decrease. It is essential to the seaworthiness of a ship to retain a substantial amount of reserve buoyancy. Some ships can take more than their own weight in flooding water aboard without sinking due to reserve buoyancy.

Center of Buoyancy

When a ship is floating at rest in calm water, it is acted upon by two sets of forces: (1) the downward force of gravity and (2) the upward force of buoyancy. The force of gravity is a resultant or composite force, including the weights of all portions of the ship's structure, equipment, cargo, and personnel. The force of gravity may be considered as a single force, which acts downward through the ship's center of gravity (G).

The force of buoyancy is also a composite force, which results from the pressure of the water on the ship's hull. A good example of this is immersing a container in a tank of water as shown in view A of figure 12-16. The container must be held under the water to keep it from rising. View B of figure 12-16 shows the position of the container when it is released.

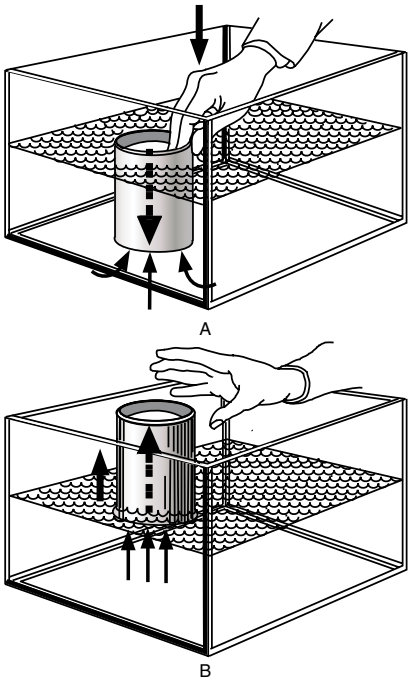

Figure 12-16. A. An immersed container; B. The container forced upward.

Horizontal pressures on the sides of a ship cancel each other under normal conditions, as they are equal forces acting in opposite directions (fig. 12-17). The vertical pressure may be regarded as a single force—the force of buoyancy acting vertically upward through the CENTER OF BUOYANCY (B).

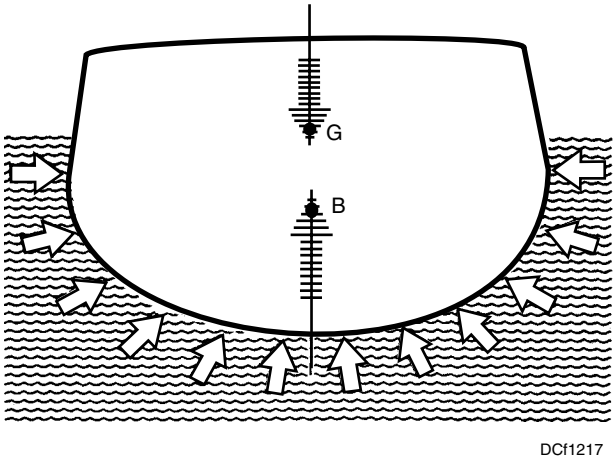

Figure 12-17. Relationship of the forces of buoyancy and gravity.

When a ship is at rest in calm water, the forces of buoyancy (B) and gravity (G) are equal and lie in the same vertical line, as shown in figure 12-17. The center of buoyancy, being the geometric center of the ship's underwater body, lies on the centerline and usually near the midship section, and its vertical height is usually a little more than half the draft. As the draft INCREASES, B rises with respect to the keel. Figure 12-18 shows how different drafts will create different values of the HEIGHT OF THE CENTER OF BUOYANCY FROM THE KEEL (KB). A series of values for KB (the center of buoyancy from the keel) is obtained and these values are plotted on a curve to show KB versus draft. Figure 12-19 shows an example of a KB curve for a warship.

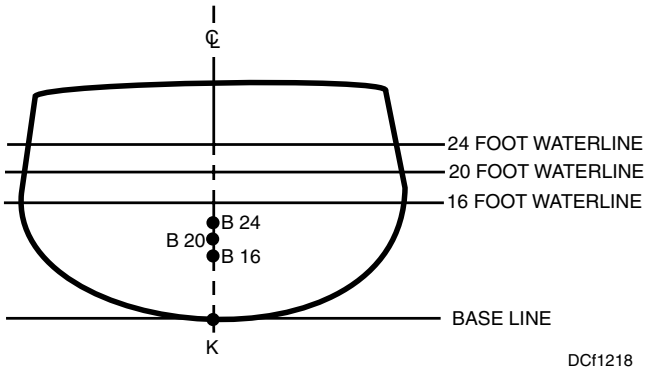

Figure 12-18. Successive centers of buoyancy (B) for different drafts.

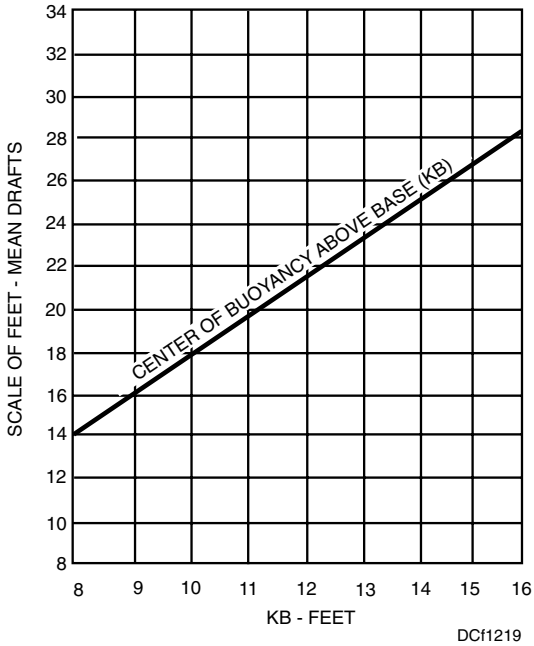

Figure 12-19. Curve of center of buoyancy above base.

To read KB when the draft is known, start at the proper value of the draft on the scale at the left (fig. 12-19) and proceed horizontally to the curve. Then drop vertically downward to the baseline (KB). Thus, if our ship were floating at a mean draft of 19 feet, the KB found from the chart would be approximately 11 feet.

Inclining Moments

A ship may be disturbed from rest by conditions which tend to make it heel over to an angle. These conditions include such things as wave action, wind pressures, turning forces when the rudder is put over, recoil of gunfire, impact of a collision or enemy hit, shifting of weights on board, and addition of off-center weights. These conditions exert heeling moments on the ship that may be temporary or continuous.

When a disturbing force exerts an inclining moment on a ship, there is a change in the shape of the ship's underwater body. The underwater volume is relocated, its bulk being shifted in the direction of the heel. This condition causes the center of buoyancy (B) to leave the ship's centerline and shift in the direction of the heel. (The center of buoyancy moves to the geometric center of the new underwater body.) As a result, the lines of action of the forces of buoyancy and gravity separate and in doing so exert a MOMENT on the ship. This moment tends to restore the ship to an even keel.

If you study figure 12-20, you will notice that a RIGHTING or RESTORING MOMENT is present. This righting moment is caused by the two equal and opposite forces, each of W tons (displacement) magnitude, separated by a distance GZ, which constitutes the LEVER ARM OF MOMENT. Figure 12-20 shows that the ship is stable because the center of buoyancy (B) has shifted far enough to position the buoyant force where it tends to restore the ship to an even keel or an upright position.

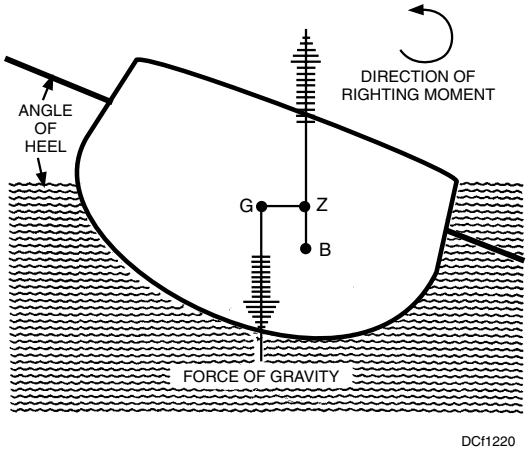

Figure 12-20. Development of righting moment when a stable ship inclines.

A moment is the product of a force tending to produce a rotation about an axis times its distance from the axis. If two equal and opposite forces are separated by a distance, the moment will become a couple which is measured by ONE of the forces times the distance that separates them. The RIGHTING MOMENT of a ship is therefore the product of the force of buoyancy times the distance GZ (fig. 12-20) that separates the forces of buoyancy and gravity. It may also be expressed as the force of gravity (weight of the ship) times GZ. The distance GZ is known as a ship's RIGHTING ARM. Putting this into mathematical terms, you have the following:

Righting moment = W x GZ (expressed in foot-tons)

Where:

W = displacement in tons

GZ = righting arm in feet

For example, if a ship displaces 10,000 tons and has a 2-foot righting arm at 40° inclination, the righting moment is 10,000 tons times 2 feet, or 20,000 foot-tons. These 20,000 foot-tons represent the force, which tends to return the ship to an upright position.

However, it is possible for conditions to exist which do not permit B to move far enough in the direction in which the ship rolls to place the buoyant force outboard of the force of gravity. The moment produced will tend to upset the ship, rendering it unstable. Figure 12-21 shows an unstable ship in which the relative positions of B and G produce an UPSETTING MOMENT. In this illustration it is obvious that the cause of the upsetting moment is the high position of G (center of gravity) and the GEOMETRIC CENTER OF THE UNDERWATER BODY (B—the center of buoyancy).

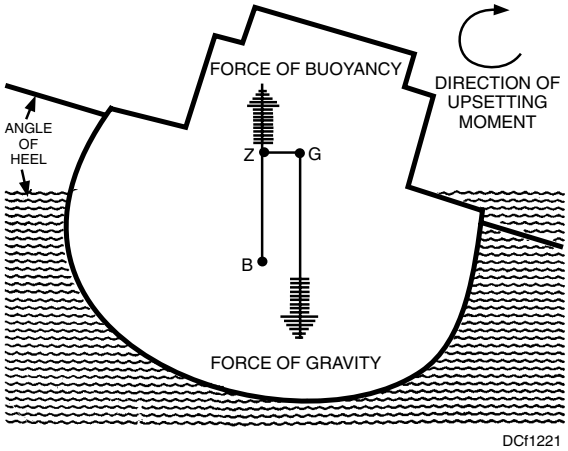

Figure 12-21. Development of an upsetting moment when an unstable ship inclines.

Metacenter

A ship's METACENTER (M) is the intersection of two successive lines of action of the force of buoyancy, as the ship heels through a very small angle. Figure 12-22 shows two lines of buoyant force. One of these represents the ship on even keel, the other at a small angle of heel. The point where they intersect is the initial position of the metacenter. When the angle of heel is greater than the angle used to compute the metacenter, M moves off the centerline and the path of movement is a curve.

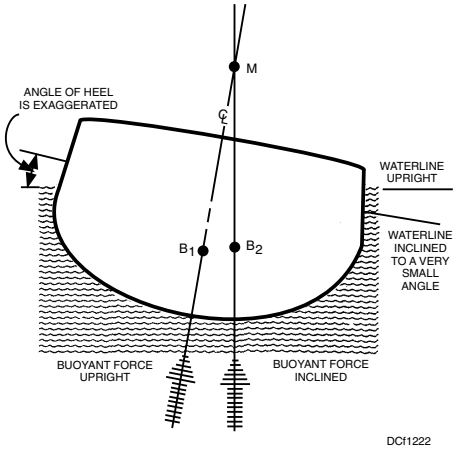

Figure 12-22. The metacenter.

The INITIAL position of the metacenter is most useful in the study of stability, because it provides a reference point when the ship is upright and most stable. In our discussion we will refer to initial position of M. The distance from the center of buoyancy (B) to the metacenter (M) when the ship is on even keel is the METACENTRIC RADIUS.

Metacentric Height

The distance from the center of gravity (G) to the metacenter is known as the ship's METACENTRIC HEIGHT (GM). Figure 12-23, view A, shows a ship heeled through a small angle (the angle is exaggerated in the drawing), establishing a metacenter at M. The ship's righting arm is GZ, which is one side of the triangle GZM. In this triangle GZM, the angle of heel is at M. The side GM is perpendicular to the waterline at even keel, and ZM is perpendicular to the waterline when the ship is inclined.

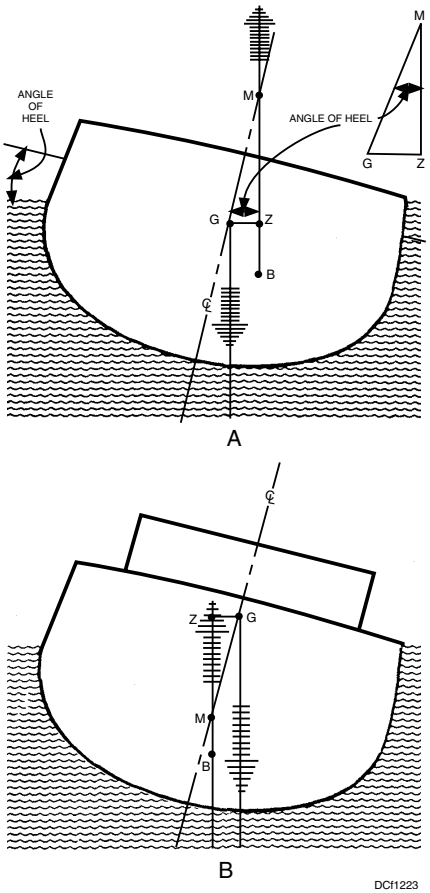

Figure 12-23. A. Stable condition, G is below M; B. Unstable condition, G is above M.

It is evident that for any given angle of heel, there will be a definite relationship between GM and GZ because $GZ = GM \sin \theta$. Thus GM acts as a measure of GZ, the righting arm.

The ship's METACENTRIC HEIGHT (GM) is not only a measure of the ship's RIGHTING ARM (GZ) but is also an indication of whether the ship is stable or unstable. If M is above G, the metacentric height is positive, the moments which develop when the ship is inclined are RIGHTING MOMENTS, and the ship is stable, as shown in view A of figure 12-23. But if M is below G, the metacentric height is negative, the moments that develop are UPSETTING MOMENTS, and the ship is unstable, as shown in view B of figure 12-23.

Influence of Metacentric Height

If the metacentric height (GM) of a ship is large, the righting arms that develop, at small angles of heel, will be large. Such a ship is "stiff" and will resist roll. However, if the metacentric height of a ship is small, the righting arms that develop will be small. Such a ship is tender and will roll slowly.

In ships, large GM and large righting arms are desirable for resistance to damage. However, a smaller GM is sometimes desirable for a slow, easy roll that allows for more accurate gunfire; therefore, the GM value for a naval ship is the result of compromise.

Inclining Experiment

The ship designer uses calculations to determine the vertical position of the center of gravity. From available plans and data, the various items that go to make up the ship and its load are tabulated. The ship can be considered as consisting of the various parts of the structure, machinery, and equipment. The load is comprised of fuel, oil, water, ammunition, and sundry stores aboard.

Although the position of the center of gravity as estimated by calculation is sufficient for design purposes, an accurate determination is required to establish the overall stability of the ship when it is operating. Therefore, an inclining experiment is performed to obtain accurately the vertical height of the center of gravity above the keel (KG) when the ship is completed. An inclining experiment consists of moving one or more large weights across the ship and measuring the angle of list produced. This angle of list usually does not exceed 2°. The ship should be in the best possible condition for the inclining. The naval shipyard or building yard at which the inclining experiment is to be performed issues a memorandum to

the commanding officer of the ship outlining the necessary work to be done by the ship's force and by the yard to prepare the ship for the inclining.

The results of the experiment are furnished to each ship as a "booklet of inclining experiment data." This booklet contains data on displacement, the center of gravity above the keel (KG), and overall stability for the operating conditions of load. Detailed information on the inclining experiment can be obtained from *Naval Ships' Technical Manual* (*NSTM*), chapter 096, "Weights and Stability."

REVIEW QUESTIONS

Q1. Detailed information on the laws of mathematics and physics used to determine the buoyancy and stability of a ship are provided in *Naval Ships' Technical Manual* (*NSTM*), chapter 079, volume 1, and in *NSTM*, chapter 096.

1. True
2. False

Q2. Which of the following trigonometric functions is NOT used for making calculations to determine a ship's stability?

1. Cosine
2. Sine
3. Tangent
4. Cotangent

Q3. Which of the following terms best defines force multiplied by the distance from an axis about which you want to find its effect?

1. *Moment of force*
2. *Friction*
3. *Ballast*
4. *Inclining moment*

Q4. The volume of water that is moved by the hull of a ship is known as "displacement."

1. True
2. False

Q5. What measurement is known by the term *freeboard*?

1. Distance in feet from the keel to the waterline
2. Distance from the waterline to the weather deck edge
3. Distance from the bow to the stern
4. Distance from the portside to the starboard side of the ship

Q6. Which of the following information is NOT contained in the "booklet of inclining experiment data?"

1. Data on displacement
2. The center of gravity above the keel
3. Reserve buoyancy
4. Overall stability

ANALYSIS OF STABILITY

Learning Objectives: Recall the laws of physics and trigonometry used to determine stability and buoyancy of a ship; and the effects of buoyancy, gravity, and weight shifts on ship stability.

To analyze stability principles, you must be familiar with the terms, definitions, and equations that are used to express important relationships. These are listed below.

- G, the ship's center of gravity, is the point at which all weights of the ship may be considered to be concentrated. The force of gravity is considered as acting straight downward, through the center of gravity, at right angles to the waterline.
- B, the ship's center of buoyancy, is at the geometric center of the ship's underwater hull. When a ship is at rest in calm water, the forces of B and G are equal and opposite, and the points B and G lie in the same vertical line. When the ship is inclined, B and G move apart, since B moves off the ship's centerline as a result of the change in the shape of the underwater hull.
- M, the ship's metacenter, is a point established by the intersection of two successive lines of buoyant force as the ship heels through a very small angle.

- GM, metacentric height, is the distance from G to M; it is measured in feet. Z is the point at which a line, through G, parallel to the waterline, intersects the vertical line through B.
- GZ, the distance from G to Z, is the ship's righting arm; it is measured in feet. For small angles of heel, GZ may be expressed by the equation
- $GZ = GM \sin \theta$
- W is the weight (displacement) of the ship; it is measured in long tons.
- K is a point at the bottom of the keel, at the midship section, from which all vertical measurements are made.
- KB is the vertical distance from K to the center of buoyancy when the ship is upright. KB is measured in feet.
- KG is the vertical distance from K to the ship's center of gravity when the ship is upright. KG is measured in feet.
- KM is the vertical distance from K to the metacenter when the ship is upright. KM is measured in feet.

The RIGHTING MOMENT of a ship is W times GZ, that is, the displacement times the righting arm. Righting moments are measured in foot-tons. Since the righting arm (GZ) is equal to GM times sin θ, for small values of θ, you can say that the righting moment is equal to W times GM times sin θ. Because of the relationship between righting arms and righting moments, it is obvious that stability may be expressed either in terms of GZ or in righting moments. However, you must be very careful not to confuse righting arms with righting moments; they are NOT identical.

STABILITY CURVES

When a series of values for GZ (the ship's righting arm) at successive angles of heel are plotted on a graph, the result is a STABILITY CURVE. The stability curve, as shown in figure 12-24, is called the CURVE OF STATIC STABILITY. The word *static* indicates that it is not necessary for the ship to be in motion for the curve to apply. If the ship is momentarily stopped at any angle during its roll, the value of GZ given by the curve will still apply.

NOTE

The stability curve is calculated graphically by design engineers for values indicated by angles of heel above 7°.

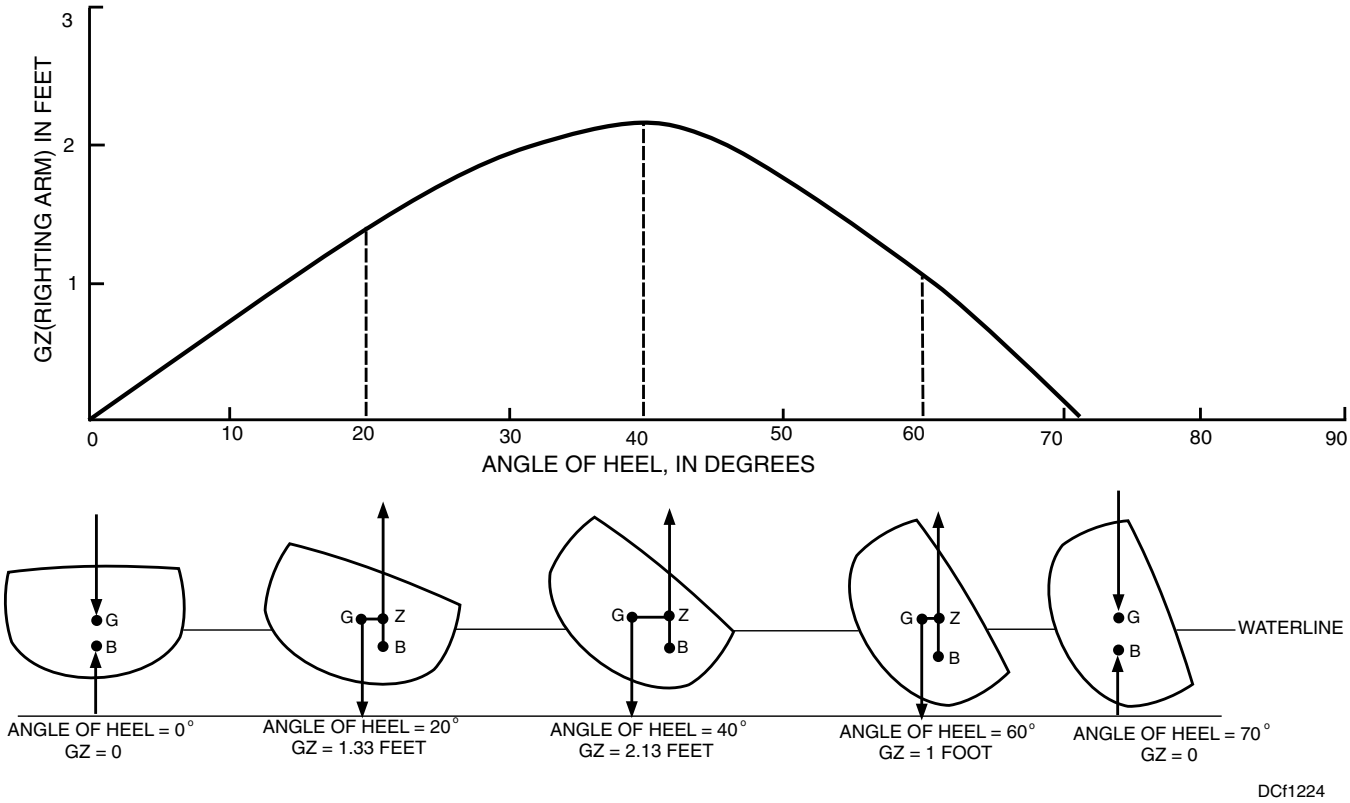

Figure 12-24. Curve of static stability.

To understand this stability curve, it is necessary to consider the following facts:

1. The ship's center of gravity does NOT change position as the angle of heel is changed.
2. The ship's center of buoyancy is always at the geometric center of the ship's underwater hull.
3. The shape of the ship's underwater hull changes as the angle of heel changes.

If these three facts are considered collectively, you will see that the position of G remains constant as the ship heels through various angles, but the position of B changes according to the angle of inclination. When the position of B has changed so that B and G are not in the same vertical line, a righting arm GZ must exist. The length of this righting arm depends upon the angle at which the ship is inclined (fig. 12-25). GZ increases as the angle of heel increases, up to a certain point. At about an angle of 40°, the rate of increase of GZ begins to level off. The value of GZ diminishes and finally reaches zero at a very large angle of heel.

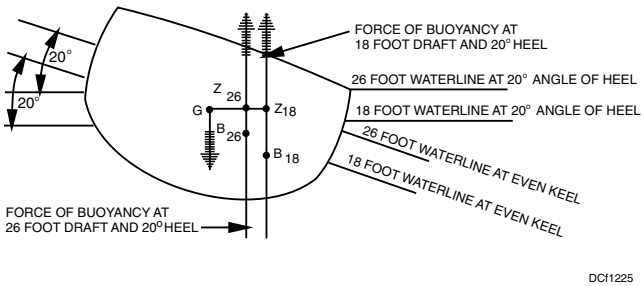

Figure 12-25. Effect of draft on righting arm.

Effect of Draft on Righting Arm

A change in displacement will result in a change of draft and freeboard; and B will shift to the geometric center of the new underwater body. At any angle of inclination, a change in draft causes B to shift both horizontally and vertically with respect to the keel. The horizontal shift in B changes the distance between B and G, and thereby changes the length of the righting arm, GZ. Thus, when draft is increased, the righting arms are reduced throughout the entire range of stability. Figure 12-25 shows how the righting arm is reduced when the draft is increased from 18 feet to 26 feet when the ship is inclined at an angle of 20°.

A reduction in the size of the righting arm usually means a decrease in stability. When the reduction in GZ is caused by increased displacement, however, the total effect on stability is more difficult to evaluate. Since the RIGHTING MOMENT is equal to W times GZ, it will be increased by the gain in W at the same time that it is decreased by the reduction in GZ. The gain in the righting moment, caused by the gain in W, does not necessarily compensate for the reduction in GZ.

In summary, there are several ways in which an increase in displacement affects the stability of a ship. Although these effects occur at the same time, it is best to consider them separately. The effects of increased displacement are the following:

1. RIGHTING ARMS (GZ) are decreased as a result of increased draft.
2. RIGHTING MOMENTS (foot-tons) are decreased as a result of decreased GZ.
3. RIGHTING MOMENTS are increased as a result of the increased displacement (W).

Cross Curves of Stability

The position of the center of buoyancy at any given angle of inclination depends upon the draft. As the draft increases, the center of buoyancy moves closer to the center of gravity, thereby reducing the length of the righting arms. To determine this effect, the design activity inclines a line drawing of the ship's lines at a given angle, and then lays off a series of waterlines on it. These waterlines are chosen at evenly spaced drafts throughout the probable range of displacements. For each waterline the value of the righting arm is calculated, using an ASSUMED center of gravity, rather than the TRUE center of gravity. A series of such calculations is made for various angles of heel—usually 10°, 20°, 30°, 40°, 50°, 60°, 70°, 80°, and 90°—and the results are plotted on a grid to form a series of curves known as the CROSS CURVES OF STABILITY.

Figure 12-26 is an example of a set of cross curves. Note that, as draft and displacement increase, the curves all slope downward, indicating increasingly smaller righting arms.

The cross curves are used in the preparation of stability curves. To take a stability curve from the cross curves, draw a vertical line (such as line MN in fig. 12-26) on the cross curve sheet at the displacement that corresponds to the mean draft of the ship. At the intersection of this vertical line with each cross curve,

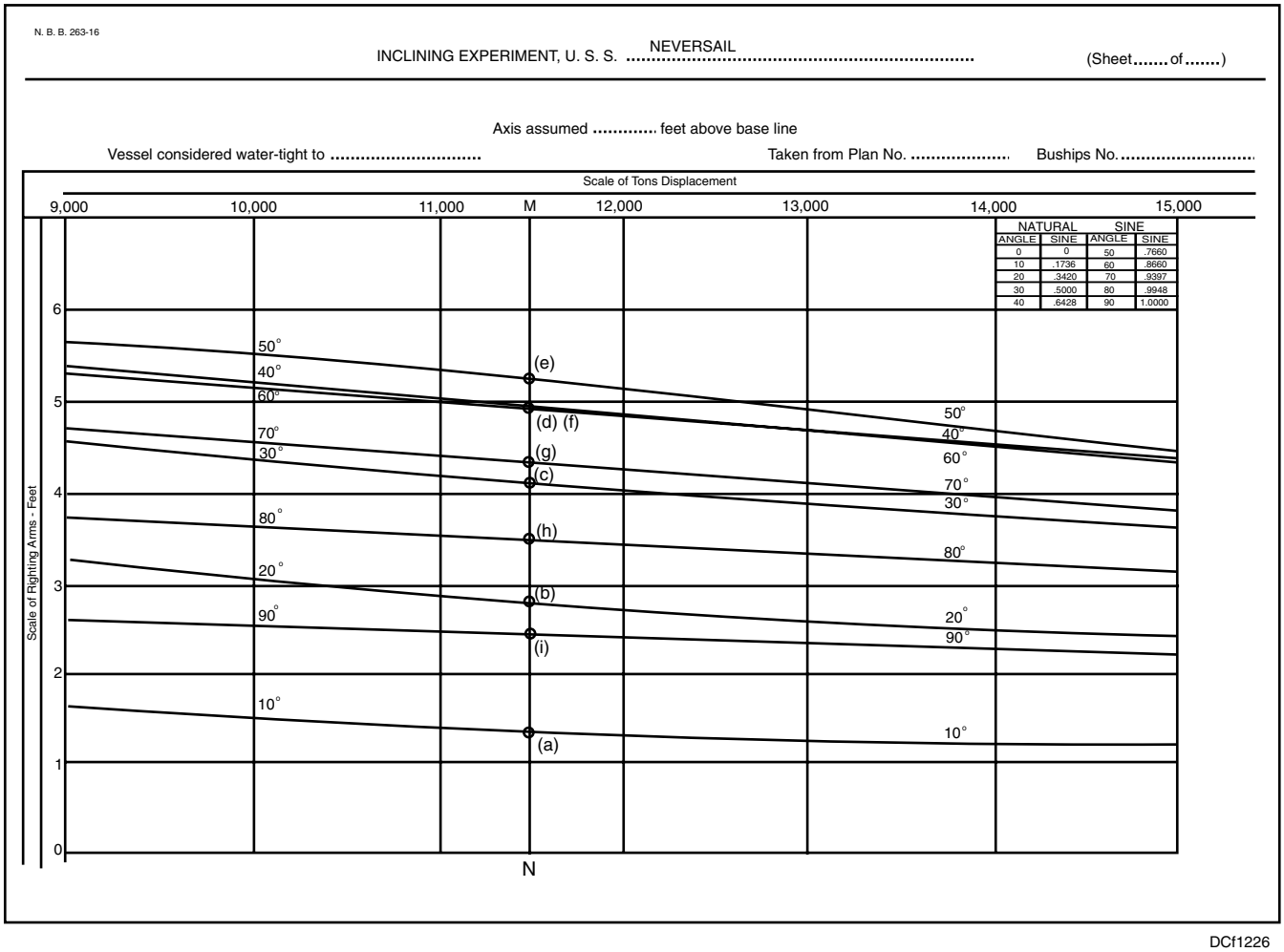

Figure 12-26. Example of cross curves of stability.

read the corresponding value of the righting arm on the vertical scale at the left. Then plot this value of the righting arm at the corresponding angle of heel on the grid for the stability curve. When you have plotted a series of such values of the righting arms from 10° to 90° of heel, draw a smooth line through them and you have the UNCORRECTED stability curve for the ship at that particular displacement.

In figure 12-27, curve A represents an uncorrected stability curve for the ship while operating at 11,500 tons displacement, taken from the cross curves shown in figure 12-26. This stability curve cannot be used in its present form, since the cross curves are made up on the basis of an assumed center of gravity. In actual operation, the ship's condition of loading will affect its displacement and therefore the location of the ship's center of gravity (G). To use a curve taken from the cross curves, therefore, it is necessary to correct the curve for the ACTUAL height of G above the keel (KG). If the distance KG is not known and a number of weights have been added to or removed from a ship, KG can be found by the use of vertical moments. A vertical moment is the product of the weight times its vertical height above the keel. As far as the new center of gravity is concerned, when a weight is added to a system of weights, the center of gravity can be found by taking moments of the old system plus that of the new weight and dividing this total moment by the total final weight. Detailed information concerning changes in the center of gravity of a ship can be obtained from *Naval Ships' Technical Manual* (*NSTM*), chapter 096.

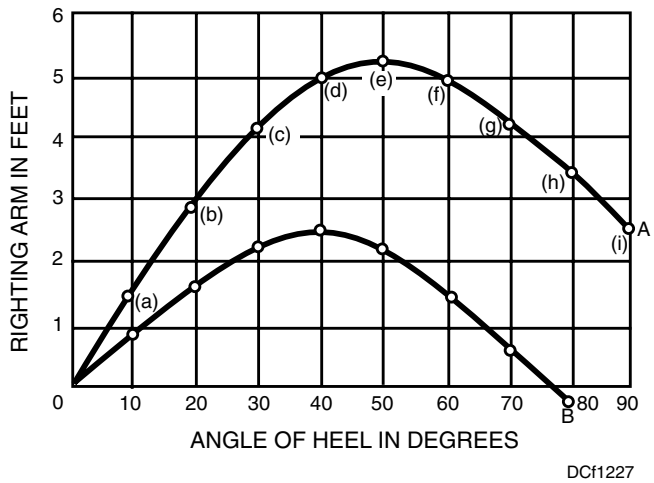

Figure 12-27. A. Uncorrected stability curve taken from cross curves; B. Corrected stability curve.

Suppose that the cross curves are made up on the basis of an assumed KG of 20 feet and that you determine that the actual KG is 24 feet for the particular condition of loading. This means that the true G is 4 feet higher than the assumed G and that the righting arm (GZ) at each angle of inclination will be SMALLER than the righting arm shown in figure 12-27 (curve A) for the same angle. To find the new value of GZ for each angle of inclination, multiply the increase in KG (4 feet) by the sine of the angle of inclination, and SUBTRACT this product from the value of GZ shown on the cross curves or on the uncorrected stability curve. In order to facilitate the correction of the stability curves, a table showing the necessary sines of the angles of inclination is included on the cross curves form.

Next, find the corrected values of GZ for the various angles of heel shown on the stability curve (A) in figure 12-27, and plot them on the same grid to make the corrected stability curve (B) shown in figure 12-27.

At 10°, the uncorrected value of GZ is 1.4; therefore, the corrected GZ at 10° is 1.4 minus (4 x 0.1736), or 0.7056.

At 20°, the uncorrected value of GZ is 2.8; therefore, the corrected GZ at 20° is 2.8 minus (4 x 0.3420), or 1.4320.

Repeating this process at 30°, 40°, 50°, 60°, 70°, and 80°, the following values are obtained:

At 30°, the corrected GZ = 2.2000

At 40°, the corrected GZ = 2.3288

At 50°, the corrected GZ = 2.2360

At 60°, the corrected GZ = 1.4360

At 70°, the corrected GZ = 0.5412

At 80°, the corrected GZ = minus 0.4392

It is not necessary to figure the corrected GZ at 90°, since the value is already negative at 80°. When the values from 10° through 80° are plotted on the grid and joined with a smooth curve, the CORRECTED stability curve (B) shown in figure 12-27 results. As you can see, the corrected curve shows maximum stability to be at 40°; it also shows that an upsetting arm, rather than a righting arm, generally exists at angles of heel in excess of 75°.

EFFECTS OF LOOSE WATER

When a tank or a compartment in a ship is partially full of liquid that is free to move as the ship heels, the surface of the liquid tends to remain level. The surface of the free liquid is referred to as FREE SURFACE. The tendency of the liquid to remain level as the ship heels is referred to as FREE SURFACE EFFECT. The term *LOOSE WATER* is used to describe liquid that has a free surface; it is NOT used to describe water or other liquid that completely fills a tank or compartment and thus has no free surface.

Free Surface Effect

Free surface in a ship causes a reduction in GM, due to a change in the center of gravity, and a consequent reduction in stability. The free surface effect is separate from and independent of any effect that may result merely from the addition of the weight of the liquid. When free surface exists, a free surface correction must be included in stability calculations. However, when a tank is completely filled so that there is no free surface, the liquid in the tank may be treated as a solid; that is, the only effect of the liquid on stability is the effect of its weight at its particular location.

To understand the actions that occur because of free surface effect, use a centerline compartment that is partially full of water, as shown in figure 12-28, as an example.

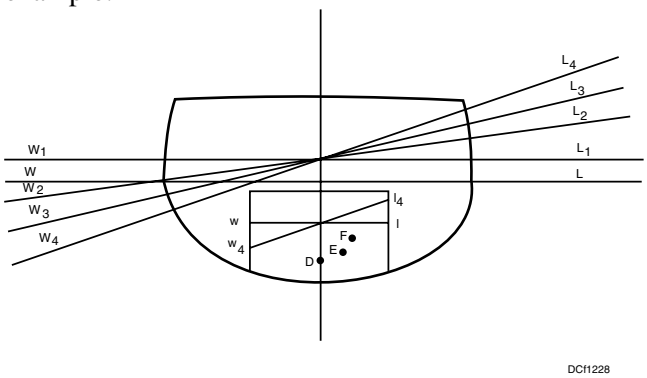

Figure 12-28. Effects of free surface.

To begin with, the ship is floating on an even keel at waterline WL. Then the compartment is flooded to waterline W_1. Assuming that the water enters the compartment instantaneously and that it is instantaneously frozen solid, the effects of this frozen body of water are the same as if a solid weight had been added. The ship undergoes parallel sinkage and comes to rest at a new waterline W_1L_1.

Now suppose that an outside force acts on the ship, causing it to heel over at a small angle of list to a new waterline W_2L_2. If at the same time the liquid is freed from its frozen state, it will run toward the low side of the compartment until the surface of the water in the compartment is parallel to the existing waterline W_2L_2. A wedge of liquid is thus shifted from one side of the compartment to the other; as a result, the center of gravity of the liquid is shifted from D to E. As the center of gravity of the liquid is shifted outboard, an additional inclining moment is created. This causes the ship to list to a new waterline W_3L_3.

The additional list, in turn, causes a further shift of the liquid in the compartment and a further shift of the center of gravity of the liquid. As the center of gravity of the liquid shifts to F, another inclining moment is created and the ship lists even more. Eventually the ship will come to rest with a waterline such as W_4L_4. This will occur when the righting moment of the ship is equal to the combined effects of (1) the original inclining moment created by the outside force and (2) the inclining moment created by the shift of liquid within the compartment.

Location of Free Surface

The free surface effect is independent of the location of the free surface within the ship. A free surface with a certain length and breadth will, at any given angle of heel, cause the same reduction in GM (and, therefore, the same loss of stability) no matter where it is in the ship—forward or aft, high or low, on the centerline or off the centerline.

Depth of Loose Water

The free surface effect of a given area of loose water at a given angle of heel does NOT depend upon the depth of the loose water in the tank or compartment, unless the loose water is shallow enough or deep enough to cause the effect known as "pocketing" of the free surface. Pocketing occurs when the free surface of the liquid comes in contact with the deck or the overhead and causes a reduction in the breadth of the free surface.

To understand how pocketing of the free surface reduces the free surface effect, study figure 12-29. View A of figure 12-29 shows a compartment in which the free surface effect is NOT influenced by the depth of the loose water. The compartment shown in view B, however, contains only a small amount of water. When the ship heels sufficiently to reduce the waterline in the compartment from w1 to W_1l_1, the breadth of the free surface is reduced and the free surface effect is thereby reduced. A similar reduction in free surface effect occurs in the almost full compartment shown in view C, again because of the reduction in the breadth of the free surface. As figure 12-29 shows, the beneficial effect of pocketing is greater at larger angles of heel.

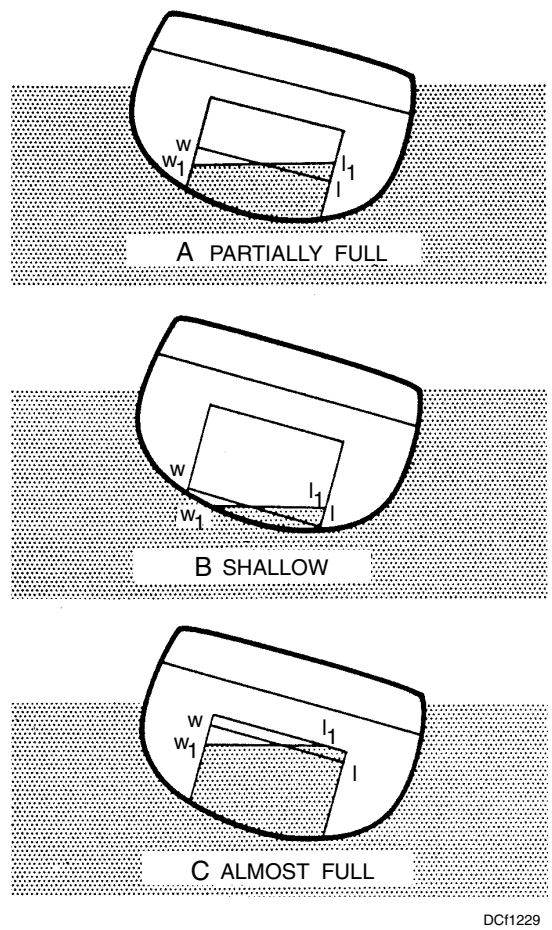

Figure 12-29. Diagram to illustrate pocketing of free surface.

The reduction in free surface effect that results from pocketing is NOT taken into consideration when evaluating stability. Since pocketing improves stability, neglecting this factor in stability calculations provides a margin of safety; however, in centerline deep tanks on

some ships in which the tank is higher than wide, the opposite may be true. The normal practice of maintaining the fuel oil tanks 95 percent full takes advantage of the fact that pocketing occurs, at very small angles of heel, when a compartment is almost full.

Length and Breadth of Free Surface

The athwartship breadth of a compartment has a great influence on the reduction in GM caused by the free surface effect. This influence is shown by the following formula:

$$\text{Rise in G} \frac{b^3 1}{12(35W)}$$

Where b = athwartship breadth of compartment

1 = fore-and-aft length of compartment

W = displacement of ship

As indicated by this formula, the free surface effect varies as the cube of the breadth (b) but only as the first power of the length (l). Because of this relationship, a single bulkhead that cuts a compartment in half in a fore-and-aft direction will quarter the free surface effect.

Chart for Calculating Free Surface Effect

To avoid having to make calculations from the formula given in the previous section, a free surface effect chart based on this formula is used to find the reduction in GM that occurs as a result of free surface. Such a chart is shown in figure 12-30.

To use this chart, draw a straight line from the appropriate point on the ATHWARTSHIP DIMENSION scale (A) to the appropriate point on the

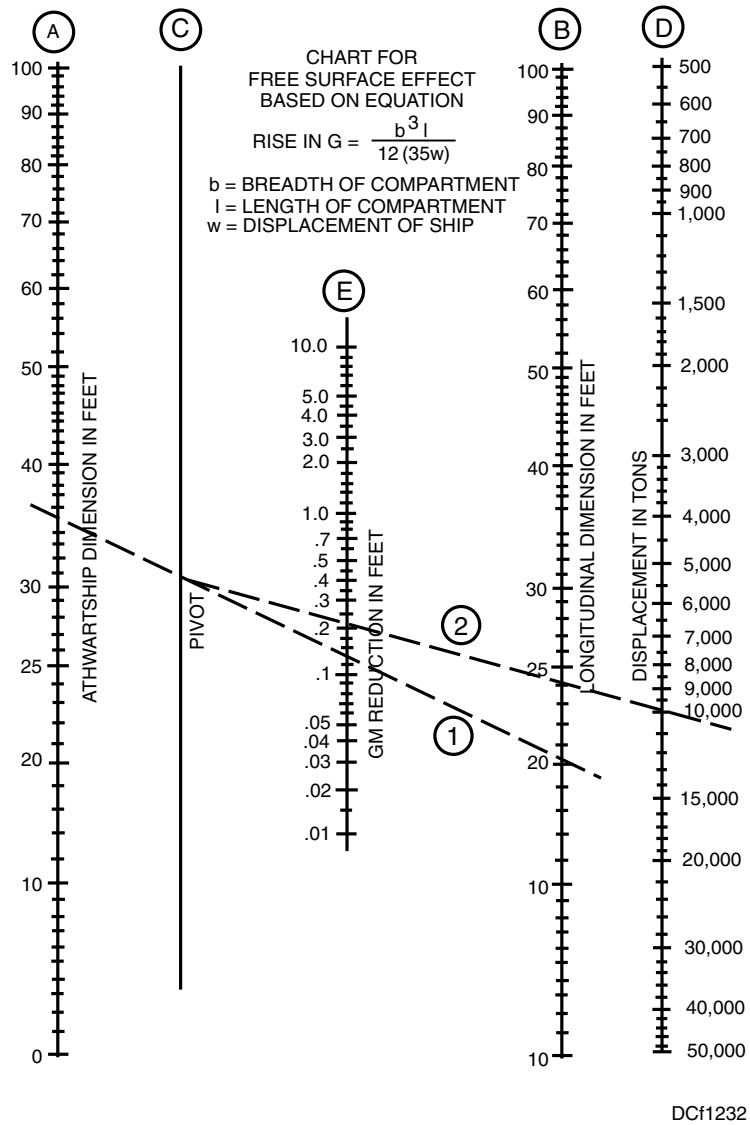

Figure 12-30. Chart for calculating free surface effect.

LONGITUDINAL DIMENSION scale (B); this line will intersect the pivot scale. Then draw a second straight line from the point of intersection on the pivot scale (C) to the appropriate point on the displacement scale (D). The point at which this second straight line intersects the GM reduction scale (E) gives you the reduction in GM (in feet) that is caused by the free surface.

For example, assume that you want to find what reduction in GM is caused by free surface effect in a partially flooded compartment that is 35 feet athwart ships and 20 feet fore-and-aft, in a ship of 10,000 tons displacement. Draw the first straight line from the 35-foot point on the athwartship dimension scale to the 20-foot point on the longitudinal dimension scale. Then draw the second straight line from the point of intersection on the pivot line to the 10,000-ton point on the displacement scale. The point at which the second straight line intersects the GM reduction scale indicates how much reduction in GM has occurred because of free surface effect in the partially flooded compartment. In this example, GM has been reduced 0.2 foot.

Free Communication Effect

Thus far, the stability changes caused by the effect of free surface and by the addition of the weight of the flooding water have been considered. In certain instances, it is also necessary to make allowance for stability changes that occur when an off-center compartment is in free communication with the sea.

If a boundary of an off-center compartment is so extensively ruptured that the sea can flow freely in and out as the ship rolls, the FREE COMMUNICATION EFFECT will cause a reduction in GM and in GZ. Note that the free communication effect on stability is IN ADDITION TO the effect of free surface and the effect of added weight. To understand the free communication effect, consider an off-center compartment partially full of water and in free communication with the sea, as shown in figure 12-31. (Note that this compartment is free to vent at the top.)

Before the hull is ruptured, the ship floats on an even keel at waterline WL. Then the compartment is partially flooded and left in free communication with the sea. Assume that the water enters the compartment instantaneously (up to the level of the ship's original waterline WL) and is instantaneously frozen solid. If the weight of the frozen water is distributed equally about the ship's centerline, the ship will undergo parallel sinkage to a new waterline such as W_1l_1. Since the weight is off center, however, the ship assumes an inclined position with a waterline similar to W_2L_2.

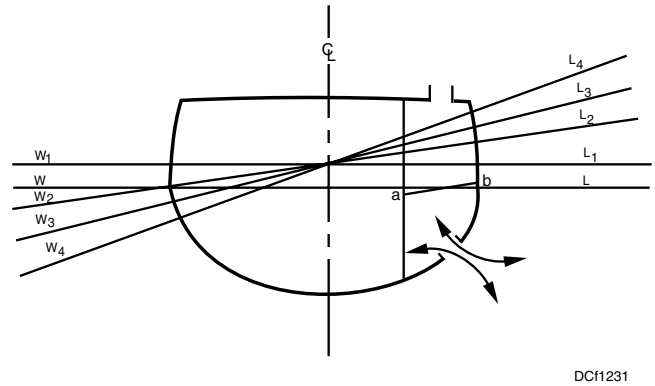

Figure 12-31. Free communication effect in off-center compartment.

If the water in the compartment is now returned to its fluid state, it will have a waterline a-b that is parallel to (but below) the ship's waterline W_2L_2. Immediately, however, additional water will flow in from the sea and flood the compartment to the actual level of the ship's waterline W_2L_2. The ship will therefore sink deeper in the water and will assume a greater list; the waterline will reach a position such as W_3L_3. Again, additional water will flow in from the sea and flood the compartment to the level of the ship's waterline W_3L_3; this will cause the ship to sink even deeper in the water and to assume an even greater list. These interactions will continue until the waterline is at the position represented by W_4L_4.

Note that stability is not usually reduced by free communication if the compartment is symmetrical about the ship's centerline. Under certain circumstances, free communication in a centerline compartment may increase the free surface effect, and thereby reduce stability. However, it is important to remember that this reduction in stability occurs from the increased free surface effect, rather than from any free communication effect.

Summary of Effects of Loose Water

The addition of loose water to a ship alters the stability characteristics by means of three effects that must be considered separately: (1) the effect of added

weight, (2) the effect of free surface, and (3) the effect of free communication.

Figure 12-32 shows the development of a stability curve with corrections for added weight, free surface, and free communication. Curve A is the ship's original stability curve before flooding. Curve B represents the situation after flooding; this curve shows the effect of added weight (increased stability) but it does NOT show the effects of free surface or of free communication. Curve C is curve B corrected for free surface effect only. Curve D is curve B corrected for both free surface effect and free communication effect. Curve D, therefore, is the final stability curve; it incorporates corrections for all three effects of loose water.

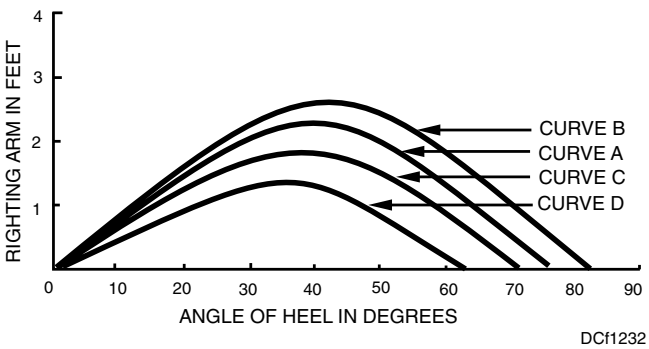

Figure 12-32. Development of stability curve corrected for effects of added weight, free surface, and free communication.

LONGITUDINAL STABILITY

Thus far in studying stability, you have been concerned only with TRANSVERSE STABILITY and with TRANSVERSE INCLINATIONS. LONGITUDINAL STABILITY and LONGITUDINAL INCLINATIONS, or TRIM, should also be considered.

Trim is measured by the difference between the forward draft and the after draft. When the after draft is greater than the forward draft, the ship is said to be TRIMMED BY THE STERN. When the forward draft is greater than the after draft, the ship is said to be TRIMMED BY THE BOW or TRIMMED BY THE HEAD. As a ship trims, it inclines about an athwartship axis that passes through a point known as the CENTER OF FLOTATION (CF).

The mean draft that is used to enter the draft scale to read a displacement curve is the draft amidships. When a ship has trim, however, neither the draft amidships nor the average of the forward and after drafts will give a true mean draft. For most types of ships, the curves of form may be used without correction for trim, PROVIDED the trim is less than about 1 percent of the length of the ship. When the trim is greater, however, the readings obtained from the curves of form must be corrected for trim.

Longitudinal stability is the tendency of a ship to resist a change in trim. The longitudinal metacentric height multiplied by the displacement is taken as a measure of INITIAL longitudinal stability when trim is very small. (It is important to note that the longitudinal metacenter (M1) is NOT the same as the transverse metacenter.) A more accurate measure of the ship's ability to resist a change of trim is made in terms of the moment required to produce a change in trim of a definite amount. The MOMENT TO CHANGE TRIM 1 INCH (MTI) is used as the standard measure of resistance to longitudinal inclination.

REVIEW QUESTIONS

Q7. The ship's center of gravity is the point at which all weights of the ship may be considered to be concentrated. The force of gravity is considered as acting straight downward, through the center of gravity, at right angles to the waterline.

1. True
2. False

Q8. Detailed information concerning changes in the center of gravity of a ship can be obtained from which of the following *NSTMs*?

1. *NSTM*, chapter 096
2. *NSTM*, chapter 040
3. *NSTM*, chapter 033
4. *NSTM*, chapter 010

Q9. Which of the following terms is used to describe water or other liquid that has a free surface?

1. *Reserve buoyancy*
2. *Reserve ballast*
3. *Draft*
4. *Loose water*

Q10. What effect does pocketing have on stability?

1. Improves stability
2. Improves righting arms
3. Improves buoyancy
4. Improves righting moments

Q11. Which of the following effects does NOT alter the stability characteristics of a ship when you have loose water?

1. Added weight
2. Free surface
3. Free communication
4. Added buoyancy

Q12. What does longitudinal stability resist?

1. Change in trim
2. Change in list
3. Draft
4. Heeling

SUMMARY

This chapter has introduced you to the terminology used for ship stability; the laws of physics and trigonometry used to determine stability and buoyancy of a ship; and the effects of buoyancy, gravity, and weight shifts on ship stability. Other aspects involved in the study of stability are taken into consideration when an inclining experiment is being conducted, when the ship is being dry docked, or when a grounding has occurred.

Aboard certain ships you may qualify as ballasting officer and be actively involved in maintaining stability. Remember that additional information on this topic may be found in the following publications: *Naval Ships' Technical Manual* (*NSTM*), chapter 079, volume 1, and chapter 096; nonresident training courses (NRTCs): *Mathematics*, volume 1; *Mathematics*, volume 2A; *Fireman*; and *Basic Machines.*

REVIEW ANSWERS

A1. Detailed information on the laws of mathematics and physics used to determine the buoyancy and stability of a ship are provided in *Naval Ships' Technical Manual* (*NSTM*), chapter 079, volume 1, and in *NSTM*, chapter 096. **(1) True**

A2. Which of the following trigonometric functions is NOT used for making calculations to determine a ship's stability? **(4) Cotangent**

A3. Which of the following terms best defines force multiplied by the distance from an axis about which you want to find its effect? **(1) *Moment of force***

A4. The volume of water that is moved by the hull of a ship is known as "displacement." **(1) True**

A5. What measurement is known by the term *freeboard*? **(2) Distance from the waterline to the weather deck edge**

A6. Which of the following information is NOT contained in the "booklet of inclining experiment data?" **(3) Reserve buoyancy**

A7. The ship's center of gravity, is the point at which all weights of the ship may be considered to be concentrated. The force of gravity is considered as acting straight downward, through the center of gravity, at right angles to the waterline. **(1) True**

A8. Detailed informationconcerning changes in the center of gravity of a ship can be obtained from which of the following *NSTMs*? **(1) *NSTM*, chapter 096**

A9. Which of the following terms is used to describe water or other liquid that has a free surface? **(4) *Loose water***

A10. What effect does pocketing have on stability? **(1) Improves stability**

A11. Which of the following effects does NOT alter the stability characteristics of a ship when you have loose water? **(4) Added Buoyancy**

A12. What does longitudinal stability resist? **(1) Change in trim**

CHAPTER 13

SHIPBOARD DAMAGE CONTROL TRAINING

Learning Objectives: Recall the organization and responsibilities of the damage control training team (DCTT) and the objectives of DCTT training.

As a general rule, it is accepted that any senior Damage Controlman should have the ability to develop and conduct damage control exercises to provide shipboard personnel training in damage control readiness. This chapter is designed to introduce you to the organization and function of the damage control training team (DCTT) and the importance of ongoing DCTT training. The information provided will enhance your ability to provide classroom lectures and develop in-port and at-sea damage control training scenarios.

TRAINING TEAM RESPONSIBILITIES

Learning Objectives: Recall the need for damage control training programs and the organization and responsibilities of the damage control training team.

The purpose for damage control training is to provide a means to increase individual or team skills in the capability to use and operate both portable and installed equipment. Training should also result in an increased knowledge of specific damage control tactics and procedures that allows personnel to complete required tasks in a more expeditious manner.

The key to a successful training program is to develop a self-sustaining training capability in each ship through the use of onboard training teams. Fleet training resources are used to build this capability by "training the trainers" who, in turn, train the shipboard watch standers and repair parties.

TRAINING TEAM FUNCTIONS

Training teams provide five general functions. They are as follows:

1. **TRAINING**. Training includes both individual and team training and encompasses prebriefing and debriefing actions as well as providing feedback during actual training scenario.
2. **EXERCISE CONTROL**. Exercise control includes initiation of the exercise and provides responses to watch stander/team actions.
3. **EXERCISE ROLE-PLAY**. For example, the training teams perform various positions in a damage control training scenario.
4. **DRILLS**. The training team develops a drill package and then conducts the drill. The team evaluates the drill results and afterward critiques the results with drill participants.
5. **MONITOR SAFETY**. Safety is ALWAYS a paramount concern. Training will be immediately stopped if any unsafe condition develops during an exercise or drill.

SHIPBOARD TRAINING TEAMS

Training teams should include a core group of the most knowledgeable and experienced personnel from the ship. These people should bring enthusiasm to the training process. The size of the crew, number of qualified personnel, complexity of the exercise, and safety requirements will influence the size of the team. In addition, some training objectives for a particular event may not require the stationing of a full training team. Ships may find it desirable to have a multi-section training team program in which a training team will be formed from one watch section to train the other and vice versa.

The training teams that should be established are as follows:

1. Integrated training team (ITT).
2. Combat systems training team (CSTT).
3. Engineering casualty control training team (ECTT).
4. Damage control training team (DCTT).
5. Seamanship training team (STT).
6. Aviation training team (ATT). ATT is required for LHA/LHD/LPH/MCS/LPD only.
7. Medical training team (MTT). MTT is required only for ships with medical departments headed by medical officers.

The training teams are responsible, under their team leaders, for identification, formulation, integration, and conduct of all phases of watch stander

and team training. These responsibilities include the following:

- Plan, brief, conduct, and debrief training using applicable instructions and publications.
- Raise watch stander level of knowledge (LOK) through a program that combines evolutions, seminars, and embedded training devices in addition to drills and exercises.
- Assess the readiness and effectiveness of watch teams in the performance of watch station specific tasks.
- Analyze problem areas or training deficiencies and initiate corrective actions to eliminate the possibility of personnel injury and damage to equipment.

DAMAGE CONTROL TRAINING TEAM (DCTT) MEMBERSHIP

The damage control training team is composed of qualified senior members of the ship's crew specifically tasked to ensure the ship's company maintains the highest level of battle readiness. This training is maintained through comprehensive training programs, which include lectures and drill scenarios.

Members of the DCTT should include the following: team leader, team coordinator, watch station evaluators, trainers, and safety observers. The responsibilities of these members of the training team are stated below.

Damage Control Training Team (DCTT) Team Leader

The executive officer serves as the chairman of the planning board for training and team leader of the DCTT. The executive officer will coordinate the planning and execution of the ship's training effort. The team leader of the DCTT is responsible for the management of the training team. This requires the team leader to conduct additional duties that include the following:

- Be a member of the planning board for training (PB4T) and the DCTT.
- Formulate a training package tailored to specific integrated or individual functional area team training objectives.
- Identify training constraints, disclosures and simulations, and annotate the training package accordingly.
- Present the proposed training package to the commanding officer for approval.
- Conduct a prebrief for each training event for training team members and the repair party being trained.
- Ensure the training team before each training event conducts a thorough safety walk- thru to ensure conditions have not changed.
- Supervise the conduct of the training event.
- Conduct the training event debriefs.
- Establish a feedback mechanism to address deficiencies identified during exercises conducted.
- Identify training shortfalls and lessons learned.

Damage Control Training Team (DCTT) Team Coordinator

The ship's senior Damage Controlman or Hull Maintenance Technician normally hold the position of DCTT team coordinator. The team coordinator is responsible to the DCTT team leader for the following:

- Organizing all team training periods, developing training event plans, and making all preparations in support of the event execution.
- Serving as overall manager of the training event briefs, performance, and debriefs.
- Training of team members in the proper conduct of their duties as drill initiators, exercise observers, and safety observers. These duties also include the operational risk management (ORM) process.
- Compiling the results of the training event and submit the event evaluation sheets along with the critique sheets to the team leader for review.
- Acting as coordinator for all recommendations and feedback concerning the training team.

Trainers, Evaluators, and Safety Observers

Trainers, evaluators, and safety observers directly observe individual and team performance of the training event and some may act as initiators. Their duties include the following:

- Conduct on on-sight observations and evaluations.
- Conduct safety walk through and pre-event checks.

- Provide training/prompting as necessary to meet the training objective during exercises conducted in the training mode.
- Normally provide prompting only as required to prevent disruption of the event timeline or for safety reasons during exercises conducted in the evaluation mode.
- Provide immediate feedback to individual watch standers upon completion of the training event.
- Provide a post-exercise debrief on observations noted, lessons learned, and recommendations for corrective actions.

REVIEW QUESTIONS

Q1. What person is responsible for the damage control training teams?

1. Team leader
2. Damage controlman chief
3. Division officer
4. Damage control assistant

Q2. One of the responsibilities of the training team is to assess the readiness and effectiveness of watchteam performance of watchstation specific tasks.

1. True
2. False

Q3. What person is designated chairman of the planning board for training and is also the team leader for the damage control training team (DCTT)?

1. Commanding officer
2. Executive officer
3. Operations officer
4. Engineer officer

Q4. What person serves as overall manager of the training event briefs, performance, and debriefs?

1. DCTT team leader
2. DCTT team coordinator
3. Evaluator
4. Safety Observer

Q5. What person is responsible to complete a safety walk-through and pre-event check prior to a drill?

1. Trainers
2. Evaluators
3. Safety observers
4. All team members

OBJECTIVES AND METHODS OF DAMAGE CONTROL TRAINING

Learning Objectives: Recall the objectives and methods of damage control training.

The goal of damage control training is to organize individual and team training to ensure shipboard readiness. An effective training program is based on a logical continuum of training, starting with basic knowledge/actions and progressing to more complex evolutions. This type of training includes classroom lectures and intensive casualty drill scenarios.

OBJECTIVES OF DAMAGE CONTROL TRAINING

Consistent training produces an optimal level of readiness that prepares members of repair party teams to react more efficiently and effectively to actual casualties. The general objectives of damage control training include the following:

- Writing and conducting various damage control exercises
- Developing the ability to meet training objectives as briefed
- Developing the ability to assess repair parties in all DC exercises
- Evaluating the ability to set and maintain material condition ZEBRA
- Developing the ability to recognize unsafe actions and conditions
- Developing the ability to recognize material deficiencies in damage control equipment and damage control fittings
- Developing the ability to brief, execute, debrief, and critique damage control exercises

Familiarization with basic damage control doctrine as directed in the following: *Naval Ships Technical Manual* (*NSTM*), chapter 555; *NSTM*,

chapter 079, volume II; *NSTM*, chapter 470; *NSTM*, chapter 070; *NSTM*, chapter 077; "Repair Party Manual," *Naval Warfare Publication* (*NWP*) 3-20.31; *Surface Force Training Manual* (*SFTM*), COMNAVSURFLANT/PACINST 3502.2E; and *Ship's Organization and Regulations Manual* (*SORM*), OPNAVINST 3120.32C

Damage Control Assistant (DCA)

The specific damage control training objectives for the damage control assistant (DCA) for damage control training are as follows:

- Training in the coordinating and monitoring of repair party's actions in multiple hit damage control problems
- Training in communicating vital information to ship control stations
- Training in evaluating damage and setting priorities for repair actions
- Providing informal material deficiency assessment
- Training in directing CBR defense postures

Damage Control Repair Parties

The specific objectives of damage control training for damage control repair parties include the following:

- Executing various damage control exercises
- Ensuring all repair party members can don and operate SCBAs, OBAs, and EEBDs
- Conducting informal inventories and inspection of repair party equipment
- Exercising pipe patching, shoring, dewatering, and plugging teams in hands-on drills
- Training CBR teams in proper monitoring, decontamination, and contamination control procedures
- Training CCA/decon personnel in setting up and processing contaminated personnel
- Developing the ability to set material conditions

In-port Damage Control Training Team

The responsibilities of the in-port damage control training team for damage control training are as follows:

- Training covering the duties of the in-port damage control training team
- Providing exercises in fire, underwater hull damage, and toxic gas drills
- Training in rescue and assistance

Damage Control Petty Officers

The responsibilities of damage control petty officers for damage control training are as follows:

- Training on responsibilities for setting and maintaining material YOKE
- Training on setting requirements for material condition YOKE
- Training on maintenance of portable damage control equipment

METHODS OF DAMAGE CONTROL TRAINING

There are many examples of effective training methods. One is lectures on various portable and installed damage control equipment. The lecture method of training discusses the basic parts, the functions of each part, and the operation of equipment with limiting parameters. Another method of training is hands-on training, sometimes called demonstration/performance; for example, having the trainee demonstrate the proper setup and operation of the P-100 fire-fighting pump. Also, training could include developing and conducting a simple scenario for in-port fire drills.

Scenarios

Experience has proven that training scenarios provide a good means for training teams to conduct efficient exercises and drills, including integrated training. The ultimate goal is for the ship's training teams to attain self-sufficiency and to maintain proficiency by conducting realistic, safe, and progressive scenarios designed to meet specific training objectives. To be effective, training must be scheduled and conducted beyond the basic training phase and continue throughout the entire operating cycle.

Effective integrated scenario-based training exercises the ship as a complete system. It affects multi-mission areas, not merely parallel/simultaneous exercises, and demonstrates the intra-dependency and interdependency of systems. Designing and conducting scenarios that demonstrate cause and effect relationships between systems are the essence of integrated training. For example, loss of firemain pressure could also cause the loss of your aqueous film-forming foam (AFFF) stations reducing a ship's fire-fighting capabilities.

Ship-wide integrated training efforts involve significant commitment of personnel and time, because this training involves more complex development and planning. Functional area training can be conducted independently by each training team as time and resources permit.

Coordination Between Training Teams

Senior Damage Controlman personnel find it necessary to coordinate, develop, and conduct intensive training, such as a main space fire or flooding drill. Development of such comprehensive shipboard damage control training programs often requires the development of drills that make coordination between training teams vitally important. These coordination efforts run from simple to complex, depending on the training objective. Some factors that must be considered to complete these coordination efforts include the following:

1. Props.
   - What props are required?
   - Has there been a review of the lists of props presented in *NWP*-3-20.31 or provided by afloat training group (ATG) publications?
   - How much of the requirement can a prop realistically simulate?
2. A logical drill progression.
3. The time allotted.
4. How will this drill impact other divisions, departments, and the ship as a whole, especially electrical drills or drills that impact ships speed or maneuverability?
5. **SAFETY**. Safety is a primary concern during all training events. If an unsafe condition exists, the training event should be STOPPED until a safe condition is established. During training, planning, and operations, the operational risk management (ORM) process must be used. The training team leaders are responsible for ensuring that proper procedures are used in planning training events. A safety walk through must always be conducted before training to ensure no conditions have changed before drills and the results reported to the team leader. Affected spaces and equipment must be checked for things like missing deck plates, damaged or missing handrails, electrical hazards, and so forth. During all training evolutions the trainer must constantly monitor for safety hazards and practices and be ready to correct any discrepancies even if it means stopping training or a drill-in process.

Damage control training effectiveness is directly related to realistic training scenarios. Too many simulations weaken drills, causing personnel to lose interest and enthusiasm, which significantly degrades training effectiveness. DCTT disclosures must be realistic and clear; manipulating indicators, staging realistic props, and generating smoke and standard disclosure techniques will reduce confusion and increase training effectiveness. Table 13-1 provides a list of recommended methods and techniques for the use of props that the DCTT can apply when developing training scenarios.

DRILL GUIDE DEVELOPMENT

Learning Objective: Recall the requirements and guidance provided for development and implementation of drill guides for damage control training.

Afloat training groups (ATGs) provide Navy ships with examples and packages of recommended damage control drills. An example of the contents of a typical drill scenario is as follows:

1. **DEFINITION:** A drill guide is a standardized procedure for conducting casualty/damage control training.

2. **NUMBERING:** Each drill guide should be identified with a two-part code. For example: DG01/SLQ-32, DG02/TSSE 7, DG03/DCMS CBR-D, and so on.

Part 1 identifies the drill guide number.

Part 2 identifies the system/scenario/event. Some examples of these are as follows:

Table 13-1. Examples of the Use of Props to Support Training Drills/Scenarios

TYPE OF SIMULATED TRAINING	EQUIPMENT AND PROPS THAT CAN BE USED	REMARKS
Presence of Fire	Red lens flashlight with red streamers above waist level Red rags Strobe light - used in cableways or on electrical panels to simulate class CHARLIE fire Red flashing beacon - rotating light to simulate flames Activate high temp alarm	**Examples of training goals:** Increase fire-fighter's proficiency Simulate flame effectiveness of smoke boundaries, etc. Desmoking procedures Smoke curtain effectiveness NFTI/Fire-finder training
Heat Source for NFTI/Fire Finder	Hot potato Heat gun Micro waved bag of rice	**DCTT DRESS** Distinguishing clothing markings include the following: Arm bands, red ball caps, red coveralls, flight deck jerseys, etc.
Fire Contained	Props at waist level	**EMERGENCY EGRESS**
Fire Out	Props out of sight, on the deck, or turned off	Use blindfolds for all personnel. Use training EEBDs if sufficient quantities are available.
Smoke	Smoke machine	**DISCLOSURES AND SIMULATIONS**
Hang Fire	White rags Place heat source prop in space	Halon/CO_2 flooding released: Operate pressure switches for ventilation shutdown and alarms
Activation	Allow plugman to open valve, then DCTT secure it	CO_2 dumped in module/enclosure: Place white paper over glass window.
CO_2	White rag or talcum powder	Fire/smoke in module/enclosure: Place red and black design/flag over observation window.
AFFF	White rag or plastic bag full of packing materials (white styrofoam popcorn)	Alarms: Place chem-lights at several locations after fire party has extinguished main fire.
PKP	Purple rag	Exothermic Cutters: Use topside on scrap metal.
Desmoking	Remove props. Actual removal of smoke using positive ventilation or portable blowers	

Table 13-1. Examples of the Use of Props to Support Training Drills/Scenarios (continued)

TYPE OF SIMULATED TRAINING	EQUIPMENT AND PROPS THAT CAN BE USED	REMARKS
Jammed WTD/WTH	Large masking tape X on the fitting; DCCT member hold fitting handle to prevent opening	Sparking: Use welder's sparking tool or strobe light Explosion: Bang on deck plates, the more noise, the better the drills. **REPAIR PARTY ACTION should include:** Charge fire hoses for all drills. Secure hose at the plug. To provide realistic hose handling training depending on drill scenario objectives. No charged fire hose should be allowed into an electronics space for training purposes. Conduct actual shoring and pipe patching. Rig P-100—fire fighting or dewatering. Light off OBAs as practical, considering allowance requirements. (Never use training canisters in a drill scenario.)
Hot Surface	Bubble wrap on fitting, deck, or bulkhead or piece of charred wood	
Bulkhead/Deck	Size of hole cut from black sheet rubber and placed in position	
Gas Free Test	Grease pencil marks on 4 gas analyzer, explosive meter or O_2 indicator and Draeger tubes.	
Electrical Isolation	Actual isolation and hang SECURED signs after watch stander places hands on correct component	
OBA Activation	Fire-fighter member takes actual canister to scene. A DCTT member takes canister and replaces it with sticker or masking tape with date written on it	
AFFF Activation	Post-ACTIVATED sign on control switch after the watch stander attempts to push it (Ensure station is in RECIRC)	
Use of AFFF (Installed systems)	Grease pencil marks on sight glass. Run magnet down sight glass	
Halon Effective	Hang white or gray streamers from overhead near view ports. Cool boundaries in surrounding spaces. White or gray streamers near main space ventilation outlets and stack	
Halon Ineffective	Hang black streamers from overhead near view ports. Hot boundaries (bubble wrap). Black streamers near main space ventilation outlets and stack	

Table 13-1. Examples of the Use of Props to Support Training Drills/Scenarios (continued)

TYPE OF SIMULATED TRAINING	EQUIPMENT AND PROPS THAT CAN BE USED	REMARKS
Heavy Smoke (to prompt active desmoking)	Black rag over scene leader's OBA facepiece	Casualty Power: Rig and energize. Rig Sub-Pump: Place pump in clean trashcan full of water.
Bilge Vapor Seal	Bucket of soapy water	
Halon/CO_S Activation/Release	Operate pressure switches for vent shutdowns and alarms/halon release pressure switch	
Halon Soak Time	IAW Main Space Fire Doctrine (MSFD)	
Loss of Firemain	Grease pencil mark on firemain gauge; False gauge face	
Hazard	Type of spill on deck or from piping: Water: Blue rags Fuel/lube oil: Yellow rags Hydraulic Fluid: Orange rags	

- DG01/USW — Drill guide #1 for the underwater weapons system.
- DG02/TSSE 7 — Drill guide #2 for the total ship survivability exercise #7.
- DG03/CS — Drill guide #3 for combat casualties that involve several systems.
- DG01/DCMS CBR-D — Drill guide #1 for conduct of CBR-D exercise.

3. **TITLE:** Defines the effect desired. Example are as follows:

- Loss of power to an equipment or system caused by "tripped circuit breakers", "engineering casualty," or "battle damage," and so forth.
- Loss of auxiliary support equipment, cooling water system, and air system, due to ruptured pipes, clogged strainers, failed pumps, power losses, and so forth.
- Class BRAVO fire in the emergency diesel generator (EDG) space.
- Chemical/biological attack.

4. **PURPOSE:** Explains the overall goal/purpose of the drill.

Examples are as follows:

- "To exercise the crew in combating damage in a CBR environment and maintain the ability of the ship to conduct its mission."
- "To exercise and evaluate the watch sections and the at-sea fire party's response to a class BRAVO fire in an EDG space."

5. **REFERENCES:** Lists the references used in the development/validation of the casualty/drill, damage control plates. Examples of references are: *Naval Warfare Publications* (*NWPs*), *Naval Ship's Technical Manuals* (*NSTMs*), *Navy Safety Precautions for Forces Afloat*, OPNAVINST 5100.19C, and fleet exercise publications (FXPs)

6. **SAFETY PRECAUTIONS:** Safety precautions should contain at least the following statement: "Forces afloat will comply with *Navy Safety Precautions for Forces Afloat*, OPNAVINST 5100.19 series." Additional precautions identified during ORM, hot/cold checks, and other means, such as *Naval Ships Technical Manuals* (*NSTMs*) should also be listed.

An example of a precaution is as follows:

- LP air will be vented in OOD Station #3; all personnel must wear hearing protection.

1. **CAUTIONS:** Identifies any special care or concern associated with insertion points, imposition methodology, and impact of the fault or casualty.

Examples of cautions are as follows:

- Drill insertion will secure firemain flow. Do not allow impacted equipment to be damaged.
- Sonar dome pressure may be affected due to isolation of the firemain system. A static FM pressure (150 psi) should effectively maintain sonar dome pressure (39.5 +2/-0 psi) throughout the scenario.
- SSGTG cooling, CIWS cooling, and VLS deluge and sprinkling system may be affected due to firemain isolation.
- Chilled water casualty will effect the following equipment: (list equipment).
- HP air will be lost to the AFT VLS launcher, no tactical impact.
- Loss of MER #2 drill execution will require emergency shutdown of the gas turbine modules. Shutdown of the gas turbine, without the normal 5 minutes of operation at idle and when T5.4 temperature during operation was 1250ºF or higher, may cause uneven cooling of the power turbine which could adversely affect operation.

8. **PREREQUISITES:** Identifies any special system setup before drill/fault/casualty insertion

Examples of prerequisites are as follows:

- Close valve ALP-V-576 in OOD Station #3 (1-366-l-Q).
- Remove quick-disconnect fitting at LP air pneumatic tool outlet outside of OOD Station #3 (1-366-l-Q).

9. **DESCRIPTION OF PROCEDURE:** The description of a procedure should identify the following:

- Crew watch condition (if applicable).
- Specific instructions for casualty/fault insertion and alternate if applicable.

Examples of procedures are as follows:

- Casualty Insertion: Damage is simulated by the use of standard disclosure methods and visual aids.
- See EOSS Firemain System Diagram DFM and Firemain and Drainage Damage Control Plates for associated piping information.
- Pipe ruptures will be simulated by isolating the port and starboard firemain pressure gauges in repair two, three, and five, and in CCS.
- At the hit, close the following globe isolation valves for damage control central (DCC) remote port and starboard pressure transducers:

Transducer	Valve	Location
Port	FM-V-343	Passage (2-370-2-L)
Starboard	FM-V-339	Passage (1-78-01-L)

- Open the cap for the transducer test/isolation connection and release the pressure. Retighten the cap and verify the test/isolation connection valve is open.
- Verbal disclosure of lost or degraded final protective lines (FPLs), sprinkler systems, CM wash down, and so forth, will be given upon activation of the system and will be done at the activation site, if remotely operated, or on site if locally operated.
- The training team member monitoring ship's force actions will determine when firemain isolation occurs as well as which equipment has been affected.

10. **EXPECTED ACTIONS:** Describes how or where the casualty/fault will manifest itself.

Examples of expected actions are as follows:

- CCS personnel will respond to low-pressure reading in DCC by sending investigators to identify break location.
- Repair party investigators will identify firemain leak and flooding, and report to the repair locker.
- The isolation team will isolate damaged firemain piping in crew living space 5 (3-310-2-L) by closing valves FM-V-319 (3-337-2) and FM-V-318 (3-339-2).

11. **EXPECTED/POSSIBLE PROBLEMS:** Describes the impact of casualty/fault during the period of the drill and actions that should be taken to restore systems after the drill is completed.

Examples of expected/possible problems are as follows:

- Loss of weapons systems capabilities during loss of cooling water drill.
- Ensure normal firemain valve alignment is restored once exercise is completed.
- Remove all ship's standard disclosures and visual aids from the assigned damage locations.

DRILL GUIDE VALIDATION

Drill guide validation is accomplished in three parts and must be conducted before its use in a drill package.

1. "Walk-Thru" is the process of verifying:

- Location
- Numbers
- Materials
- Fault/casualty does not pose a hazard to personnel or equipment

2. "Cold Checking" A cold-checked exercise is conducted on prior to starting operational equipment to validate the drill. It includes the following:

- Insertions procedures
- Symptoms
- Restoration/reconfiguration procedures
- Fault/casualty does not pose a safety hazard

3. "Hot Checking" A function of abbreviated checks conducted operating equipment to validate proper operational parameters.

- System alignment
- System parameters
- Safety devices

SAMPLE DRILL GUIDE

An example of a drill guide used on Navy ships is as follows:

DRILL GUIDE **CSCCE**

DAMAGE TO LP AIR PIPING (VITAL AIR AND NON-VITAL) DG 3/SC #7

REFERENCE TO: DSSA

COLD CHECKED_____ HOT CHECKED_____

PURPOSE: Use to train ship's force in integrated casualty control and evaluate shipboard system response to damaged low-pressure air piping passing through the bulkhead, at frame_____ for training scenario 7.

REFERENCES:

None

SAFETY PRECAUTIONS:

Forces afloat will comply with *Navy Safety Precautions for Forces Afloat*, OPNAVINST 5100 series.

CAUTIONS:

- Drill insertion will vent vital LP air into power conversion room (3-319-O-Q) and non-vital LP air into QOD Station #3 (1-366-1-Q). All personnel in the space must wear hearing protection.
- Drill will result in the loss of the vent damper for SSGTG #3, causing high temperatures.

PREREQUISITES:

- Close valve ALP-V-576 in QOD Station #3 (1-366-l-Q).
- Remove quick-disconnect fitting at LP air pneumatic tool outlet outside of QOD Station #3 (1-366-l-Q). (**NOTE**: Discharge of air from quick-disconnect fitting will be directed in such a way as to prevent hazard to either personnel or equipment.)

DESCRIPTION OF PROCEDURE: (Watch Condition III)

Casualty Insertion (Damage is imposed by securing the vital and non-vital LP air main aft of frame 300, and venting non-vital LP air into OQD Station #3 and vital LP air into power conversion room.)

- See compressed air system damage control plate, fiber-optic sensor system (FOSS) LP air system diagram DSSA for LP air system piping information.
- Use the ship's standard disclosure methods and visual aids to inform investigators and watch standers of damage.

'BROKEN PIPE"

1. LP air vital air main in power conversion room (3-319-O-Q) at frame 337 in the aft starboard corner.

2. LP air vital air main in passage (3-326-1-L) at frame 338 behind firemain pipe.
3. LP air non-vital air main in crew living space 3 (2-300-01-L) above Rack #46.
4. LP air non-vital air pipe in A/C mach and pump room (5-300-01-E) against bulkhead 338.
5. LP air non-vital air pipe in AFFF Station #2 (1-330-1-Q).

- Close the following vital LP air valve to simulate damage and tag "OPEN":

LOCATION	VALVE NO.
MER #2 (4-254-0-E)	ALP-V-157 (3-298-4)

- Close the following non-vital LP air valve to simulate damage and tag "OPEN":

LOCATION	VALVE NO.
Passage (1-254-5-L)	ALP-V-17-1

NOTE

These actions will result in partial pressure degradation of the entire vital and non-vital LP air system and affect system capability until the air piping is isolated.

- Remove drain cap and open the following vital LP air valve to simulate damage and tag "CLOSED":

LOCATION	VALVE NO.
Power Conv. Rm. (3-319-O-Q)	ALP-V-380 (Drain)

- Open the following non-vital LP air valve to simulate damage and tag "CLOSED":

LOCATION	VALVE NO.
OOD Station #3 (1-366-l-Q)	ALP-V-57-6

NOTE

These actions will result in loss of pressure of the vital and non-vital LP air system aft of frame 300 and affect the system capability until the air piping rupture is isolated. This will close the SSGTG #3 vent damper, resulting in high SSGTG #3 temperatures.

EXPECTED ACTIONS:

- Repair party investigators or combat system technician(s) will identify LP air piping damage and report to repair leader/DCA/EOOW/area supervisor/CSOOW.
- Technicians should either shut down SSGTG #3 or manually open vent dampers.
- The isolation team will isolate damaged vital LP air piping by closing valve ALP-V-157 (3-298-4) in MER #2 (4-254-0-E). (**NOTE**: This action will result in a loss of vital LP air supply to the following shipboard equipment.)
  1. SSGTG #3 bleed pressure regulating valve control air, SSGTG #3 starting air, SSGTG #3 moisture separator air. This will result in loss of SSGTG #3 within 15 minutes.
  2. CIWS magazine #2 (01-300-2-M) ammo hoist.
  3. Ventilation system closures/toxic gas dampers Nos. 20, 21, 22, 23, 409, 410. Other equipment damage and the tactical situation should preclude immediate casualty response.
  4. Torpedo magazine (2-370-8-M) pi-rail hoist and door actuator.
  5. Stern tube seals LP air hose connection.
- The isolation team will isolate damaged non-vital LP air piping by closing valve ALP-V-171 in passage (1-254-5-L). (**NOTE**: Other equipment damage and the tactical situation should preclude immediate casualty response, with the exception of the SPY cooling skid expansion tank.)
  1. SPY cooling skid expansion tank charging in AMR #1 (4-126-0-E)
  2. Pneumatic tool outlets aft of frame 300
  3. Sprinkling system dry piping blowout aft of frame 300
  4. Electrical machinery cleaning equipment aft of frame 300
  5. Chilled water expansion tank #4 charging in A/C machinery and pump room (5-300-01-E)
  6. Sea chest blowout connections in A/C machinery and pump room (5-300-01-E) and generator room (3-370-0-E)

DRILL PLAN CONSTRUCTION

This is the point at which individual drills are incorporated into a tactical scenario. Items to include in the drill plan are as follows:

- Date/Scenario #/watch team, that is, yymmdd/ASUW 1/ASUW Blue
- Purpose. The overall purpose of the drill, that is, train/evaluate the watch team's response to USW/AAW threats to include such skills as threat detection, threat evaluation, engagement, and communications procedures. Or, to train/evaluate the electronic repair team's response to casualties/faults in the combat systems to include casualty/fault recognition, reporting, and repair/reconfiguration in a hostile environment.
- Requirements: Necessary equipment and the operational state of that equipment at commencement of the drill.
- Remarks: A brief outline of the major events that occur during the drill, that is, SUW threat turns AW at T+30, or cascading equipment casualties occur at T+35, and so forth.
- Training team member positions.
  - — By name, who will be where.
  - — One individual may observe several positions.
  - — Problem control positions.
- Casualties.
  - — Time to be imposed: that is, T+15.
  - — Who will impose the casualty?
- Drill/Training Event #: CSCCE DG01/SLQ-32; ITT TSSE #3, and so forth.
- Drill/Training Event Description: "SLQ-32 computer failure", KILO/FPB attack with hit A and B.

Submit the drill plan for the commanding officer's approval. Once approved, the drill plan and all associated materials make up a completed drill package.

SAMPLE ITT DRILL PLAN/BRIEFING GUIDE

USS_____

ITT EXECUTIVE BRIEF

DATE:

START TIME: _____SECURE TIME: _____

TRAINING MODE:

CSTT	TRAINING	EVALUATION
STT	TRAINING	EVALUATION
MTT	TRAINING	EVALUATION
DCTT	TRAINING	EVALUATION
ETT	TRAINING	EVALUATION
ATT	TRAINING	EVALUATION

Communications between training teams will be via hand-held radios on Channel "A."

Overview: The overall objective of this scenario is to train/evaluate the watch team in 7responding to a small boat attack, which caused topside damage and a man overboard. The training team will be evaluating/training the watch standers in the following areas:

Geopolitical Situation: ITT leaders read geopolitical situation for the drill and refer team members to order of battle, include current readiness condition of ship, OOC or degraded.

Equipment Configuration: Review equipment necessary for the conduct of the scenario/timeline and the operational state of that equipment at commencement of the drill. Additionally, significant changes to equipment configuration.

Timeline Review: ITT leader will review timeline, as he/she notes the start of an individual training team drill within the scenario. Each team leader will provide the following information:

CSTT	Small boat attack
CIC	Command, Control, Communication
STT	Man overboard shipboard recovery
DCTT	Topside damage

1. Objective (to train/evaluate repair three damage control team in combating hull damage and flooding).
2. How the drill will be evaluated.
3. Who is going to impose drill.
4. How drill will be imposed (simulation and deviations).
5. Cascading effects of drill, if any (that is, CASREP equipment, ETRs, battle damage).

6. Safety concerns. **Safety Considerations:** State any safety concerns that the ITT must be aware of. Examples are as follows:

   - Fuel fill and transfer system seawater compensating control valve air in generator room (3-370-0-E).
   - Rudder stock inflatable seal connections (port and starboard) in steering gear room (4-442-0-E).

EXPECTED/POSSIBLE PROBLEMS:

- Ensure normal LP air system valve alignment is restored once exercise is completed.
- Remove all ship's standard disclosures and visual aids from the assigned damage locations.

Examples of two different types of damage control scenarios are provided below. These examples will give you an idea of the considerations and the coordination that is involved in the development of a major drill scenario:

USS *McKINNEY* (DDG 50)

CLASS BRAVO FIRE

MAIN ENGINEERING SPACE

DRILL SCENARIO SAMPLE

AFFECTED SPACE		DATE
MER 1		DAY MONTH YEAR

DAMAGE CONTROL TRAINING TEAM:

RANK/RATE NAME	**POSITION**	**PRD**
LCDR SAILOR-Q	DCTT LEADER	SEP 05
LCDR-Q	CCS/DCC	OCT 07
DCCS-Q	DCTT COORDINATOR/SAFETY	NOV 08
HT1-Q	AFFF MONITOR	JAN 05
DC1-Q	SPACE UPPER LEVEL	APR 08
EM1-Q	ELECTRICAL ISOLATION	DEC 05
FCCM-Q	INVESTIGATOR	JUL 08
GMC-Q	FIRE BOUNDARIES	JAN 05
MSC-Q	FIRE BOUNDARIES	JAN 06
ET1-Bluejacket-Q	FIRE BOUNDARIES	MAY 09
DK1-Q	HALON/PLUGMAN	JUN 05
LT-Q	INVESTIGATOR	JUN 07
EN1-Q	MECHANICAL ISOLATION	JUL 08
NC1-Q	OBA CHANGEOUT STATION	OCT 08
BMC-Q	REPAIR 2	JUN 05
GSMC-Q	REPAIR 5	FEB 05
EMC-Q	REPAIR 3	JUL 07
HMC-Q	SAFETY/MEDICAL	JUL 08
SKC-Q	SCENE LEADER	JUL 05
LTJG-Q	TORCH/FIRE	OCT 05

Q = PERSONNEL QUALIFIED FOR DCTT POSITION

GENERAL DESCRIPTION:

Following the watch standers' completion of initial actions in response to the leak on the fuel oil purifier inlet strainer. Vapors get into contact with 1A LOSP motor controller and flash into a Class BRAVO fire. Watch standers are forced to evacuate when Class BRAVO fire becomes uncontrollable. Primary Halon will be GOOD, depending on the watch standers' actions. Secondary Halon will be GOOD, depending on the watch standers' actions. The fire team enters the space to combat the fire, establish a reflash watch, and overhaul the fire.

DRILL BASIS:

WALK THRU/TALK THRU	DCTT GRADING	DCTT GRADING
	MINIMAL INTERVENTION	NO INTERVENTION

DRILL COORDINATION DETAILS:

1. ETT and DCTT will use Channel 4 on ESRS.
2. CCS DCTT will use 1MC in CCS to pass actua
3. Heat stress survey will be conducted at: 1330. The follow-up survey, if required after the drill, will be conducted according to *Navy Safety Precautions for Forces Afloat*, OPNAVINST 5100.19 series.
4. DC1 Sailor and SKC Navy will conduct safety walk through 1 hour before drill. Report any uncorrectable discrepancies to DCTT coordinator.
5. DCTT members on station time: 1450.
6. NR 1 AFFF will be in recirc with casualty isolation cov closed. NR 2 AFFF will have casualty isolation cov closed.
7. ELECTRICAL DCTT will re-energize the in space 115 VAC circuit LC11-4P-(3-219-2) located in 2-53-1-C after the electrician has successfully demonstrated electrical isolation of that circuit according to Main Space Fire Doctrine.

SEQUENCE OF EVENTS:

1. When all TT members report on station and they are ready to commence the drill, the DCTT will direct ETT to initiate the drill.
2. The ETT will disclose the leak as briefed.
3. TORCH flash fuel to fire immediately. Impose fire out of control immediately.
4. When the watch stander(s) attempt(s) to activate the AFFF bilge sprinkler, do/do not allow him/her to press the activation push button. AFFF DCTT will secure it upon sprinkler deactivation. AFFF DCTT discloses AFFF concentrate tank level decreasing. Flow rate GPM=31.
5. One SPACE ETT will follow the watch stander(s) out of the space. Second SPACE ETT will remain in the space and secure any remaining operating equipment if required to prevent harm to personnel or machinery.
6. HALON DCTT, when notified by TORCH that a watch stander has actuated HALON, lift the plunger for alarm, vent the shutdown and motorized damper valve pressure switches, wait 60 seconds, and lift the discharge pressure switch plunger. TORCH disclose HALON GOOD by displaying a gray rag at the main access and ellison door, depending on initial actions. If HALON is BAD, CCS DCTT will inform all DCTT and BOUNDARY DCTT. Place bubble wrap on the deck of general workshop. HALON DCTT will not operate the pressure switches if HALON activation was not attempted. TORCH place two hot spots in the area of seat of the fire. Human error that causes HALON BAD will include the following:

- Failure to close watertight doors when evacuating the affected space.
- Failure to activate the HALON system.
- Entering affected space before elapse of 15-minute soak time.

7. PLUGMAN DCTT will close fire station cutout valve after the hose has been charged and disclose satisfactory agent test after agent test has been attempted. BOUNDARYMAN DCTT will ensure that boundarymen identify all locked spaces while setting boundaries and mark with Boundary Set sign after boundaryman attempts to gain access.

8. TORCH will disclose fire contained when the hose team has demonstrated aggressive hose handling by attacking the fire.

9. TORCH will disclose fire out when the hose team demonstrates hose handling techniques that can be expected to extinguish a fire.

GENERAL DRILL PRECAUTIONS:

1. Observe personnel dressed in fire-fighter's ensembles for signs of heat stress. Pay particular attention to personnel who activate OBAs.
2. Ensure that when hoses are charged they are secured at the plug and that equipment is not inadvertently sprayed. Tie wrap nozzle in the SHUT position.
3. Ensure that EEBDs and OBA canisters are properly handled and disposed of.
4. One person on a ladder at a time and one hand should be on the handrail at all times.
5. Ensure overhaul equipment is handled carefully.
6. Ensure DCTT is positioned to prevent activation of unauthorized equipment.

OBA ACTIVATION and OBSERVATION:

An example of an observation is as follows:

- Boundaryman in CPO mess/galley observed by ET1 Bluejacket.

SELF-SIMULATIONS:

SIMULATED ACTION	SELF-SIMULATION
OBA	"I am removing the canister's cover, inserting canister, lifting bail assembly to seat canister, and pulling the lanyard to activate canister."
HALON	"I am pulling the pin and actuating the lever assembly to activate HALON."
PKP	"I am actuating the CO_2 cartridge to charge the PKP bottle."
Reentry AFFF H/R COV	"I am unlocking lock device to rotate valve to OPEN position charging hose."
NOZZLES	"I am actuating the nozzle bail assembly."

NOTE: Self-simulation shall be used by the watch stander to prevent inadvertent activation of damage control equipment during drills. This shall be as described or words to that effect which effectively describe the watch stander's actions.

AUTHORIZED SIMULATIONS:

__X__ Smoke __X__ Smoke machine will be used

__X__ Fire and fire damage

__X__ Hang fires

____ Electrical isolation

____ Mechanical isolation

__X__ Charred controllers

__X__ Energizing or activating fire-fighting equipment

__X__ Tag out and clearing of tags

__X__ Repair of equipment or casualty

__X__ Actual overhaul of the space

__X__ Inserting OBA canisters into OBA

__X__ Taking overhaul gear into the space except rake

__X__ Gas freeing of buffer zone and the space

__X__ Breaking of Draeger tubes

__X__ Atmospheric test results, including but not limited to: % oxygen, % explosive, type of toxins, carbon monoxide, carbon dioxide, hydrocarbons, hydrogen chloride, hydrogen cyanide, phosgene, hydrogen fluoride

____ Smoke and fire detection alarm indications in CCS

__X__ Opening of repair lockers by force

__X__ Dewatering

__X__ Soak time

SAFETY:

The responsibilities of the DCTT members when on station are greater than those of their assigned trainees. Safety is his/her primary concern. The training of the watch stander or repair party personnel, although an important objective, must be secondary to safety. The team member is ultimately responsible for unsafe actions of any watch standers under his/her charge. He/she has the authority to relieve his/her assigned watch stander/repair party personnel at any time and take over assignments when safety is jeopardized. He/she may allow his/her watch standers to take actions, even in the event of actual casualties, provided personnel or equipment are not placed in a hazardous situation. The DCTT member must walk a fine line between allowing those mistakes to be made and preventing unsafe conditions. Whenever there is doubt, drills must be terminated immediately.

Submitted By: _____ DCTT Coordinator

Reviewed By: _____ Chief Engineer

Reviewed By: _____ Executive Officer

Approved By: _____ Commanding Officer

USS *McINTIRE* (DDG 49)

GENERAL QUARTERS

DRILL SCENARIO SAMPLE

DAY MONTH YEAR

REPAIR LOCKER(S)	AFFECTED SPACE(S)	CASUALTY
TWO		
THREE		
	FIVE MER 1	
	MER 2 FLOODING/RUPTURED FM	
FIRE/FLOODING		

DAMAGE CONTROL TRAINING TEAM:

RANK/RATE NAME	**POSITION**	**PRD**
LCDR BUTTERCUP-Q	DCTT LEADER	MO/YR
LCDR-Q	CHIEF ENGINEER	JUL 07
HTC-Q	DCTT COORDINATOR/SAFETY	JUL 08
DC1-Q	Main 1	JUN 08
HT1-Q	DCCO	JUL 08
LT-*Q		APR 09
GMCM-Q	Main 2	JUL 09
NC1-Q	Bridge	JUL 09
LT-Q		JUL 07
BMC-Q	R-2	JUL 07
GMC-Q		JAN 09
MA1-Q	Main 1	JUL 08
EMC-Q	R-3	JUL 09
FCCM-Q		OCT 08
LT-Q	Main 1	JUN 08
EMCS-Q	Main 2	JAN 09
GSMC-Q	R-5	FEB 09
SKC-Q	Main 2	JUL 08
ENS-Q	Main 2	OCT 08
HMC-Q	Medical	JUL 09

*Assigned to DCTT only when not involved with CSTT exercises.

Q = PERSONNEL QUALIFIED FOR DCTT POSITION

GENERAL DESCRIPTION:

USS *MCKINNEY* and USS *McINTIRE* are in company with USS *MILLER*. The battle group has been ordered to enter the Eastern Mediterranean to escort friendly ships and join the UN force. USS *MILLER* has been assigned to the group to ensure a mine-free operating area in littoral waters. Macadamia poses a limited surface and air threat to Navy vessels. Surface-to-surface missile sites have been sighted along the shorelines in increasing numbers.

DRILL BASIS:

FAMILIARIZATION AND TRAINING	DCTT OBSERVATION	DCTT GRADING
WALK THRU/TALK THRU	MINIMAL INTERVENTION	NO INTERVENTION

DRILL COORDINATION DETAILS:

1. DCTT will use Channel 11 (ESRS) on walkie-talkies.

2. DCA/EOOW will use 1MC in CCS to pass actual casualties. The on-scene leader, locker leader, and CCS will use NETS 80, 81, 82, and 86 to pass drill information.

SEQUENCE OF EVENTS:

1. Incoming missiles will drive ship to general quarters. Hit ALPHA, Hit BRAVO will penetrate the skin of the ship at the waterline, port side, and frames 215 and 259. The main machinery rooms will sustain major structural damage. Communication to the sea and firemain piping causes progressive flooding in both spaces, and in Main 2, lube oil leaking from the storage tanks will erupt into a class BRAVO fire involving the entire port side of the space.

2. Three DCTT members will be in Main 1 disclosing (a) large boom at Hit ALPHA and Hit BRAVO, (b) 4 feet 6-inch hole in port bulkhead mid level, frame 215, (c) firemain rupture at frame 215, (d) progressive flooding.

3. Four DCTT members will be in Main 2 disclosing (a) large boom at Hit ALPHA and Hit BRAVO, (b) 4 feet 6-inch hole in port bulkhead mid level at frame 259, (c) firemain rupture at frame 259, (d) progressive flooding, (e) large class BRAVO fire.

PREVIOUS DRILL'S DISCREPANCIES:

Locker communications

Lockers over responding to size of casualty

DCTT communications

Setting ZEBRA (+16)

OBA LIGHTOFF: NONE

Following personnel will actually lightoff OBA

N/A

_____

Following DCTT member will observe OBA lightoff:

N/A

_____

BRIEFING NOTES:

1. Expect initial response to come from main spaces with augmentation from repair five. Damage control problem might also drive DCA to use repairs two and three to help.

2. We are actually setting ZEBRA PHASE ONE. Emphasis must be placed on setting ZEBRA quickly and correctly.

AUTHORIZED SIMULATIONS:

_____ Smoke

_____ Smoke Machine

_____ Fire

_____ Hang Fires

_____ Charred Controllers

_____ Energizing or activating fire-fighting equipment

_____ Tag out procedures

_____ Repair of equipment or casualty

_____ Opening power panels doors

_____ Actual overhaul of the space

_____ Inserting OBA canisters into OBA

_____ Taking overhaul gear into the space. (Only the rake prop will be taken into space.)

_____ Gas freeing of buffer zone and the space

_____ Atmospheric test results

_____ Smoke and fire detection indications

_____ Breaking of Draeger tubes

_____ Alarm indications in CCS

_____ Actual electrical isolation

_____ Sagging overhead

_____ Hole in bulkhead

_____ Flood water

_____ Waterspray/ruptured pipe

AUTHORIZED SELF-SIMULATIONS:

1. Authorized self-simulations will be done according to published self-simulation table.

NOTE: Self-simulation shall be used by the watch stander to prevent inadvertent activation or discharge of certain damage control equipment during drills. The self-simulation shall be as described or words to that effect which effectively describe the watch stander's actions.

GENERAL DRILL PRECAUTIONS:

1. Observe personnel for signs of heat stress.
2. One person on a ladder at a time and one hand should be on the handrail at all times.
3. Ensure overhaul equipment is handled carefully.
4. Ensure DCTT is positioned to prevent activation of unauthorized equipment.

SAFETY:

All DCTT members are safety observers. Do not permit any action that endangers personnel or machinery. In the event of an actual casualty, ensure the words *ACTUAL CASUALTY* are used and are passed to CCS. Allow the EOOW to pass the word over the 1MC "Actual casualty (description), freeze the drill"; followed by additional instructions, if required. DCTT will assist the watch stander and relieve him/her, if necessary, to prevent harm to personnel or machinery.

All DCTT members shall monitor personnel for signs of heat stress and may at any time question personnel as to their ability to continue training. If personnel become incapacitated, they shall be tended to as necessary without interrupting the drill unless additional assistance is required.

Submitted By: _____ DCTT Coordinator

Reviewed By: _____ Chief Engineer

Reviewed By: _____ Executive Officer

Approved By: _____ Commanding Officer

DRILL CRITIQUE:

Always after each training evolution the training team must conduct a debrief. It is necessary for the training team to discuss and document a list of "Lessons Learned." This list assists the team in improving their training skills and in the training of their personnel. It also enables the team to make corrections and improve the effectiveness of their training. The information must be passed on to all hands so the ship's crew can understand the errors that were made during the drill. This may reduce the possibilities of the same mistakes from reoccurring in future drills.

REVIEW QUESTIONS

Q6. Which of the following is NOT an objective of damage control training?

1. Writing and developing various damage control exercises
2. Developing the ability to meet training objectives as briefed
3. Developing the ability to assess repair parties in all DC exercises.
4. Developing training reports for the engineer officer

Q7. Specific training for the damage control repair parties includes developing the ability to set material conditions.

1. True
2. False

Q8. Which one of the following is NOT an objective of the in-port damage control training team?

1. Training in rescue and assistance
2. Training in covering the duties of an in-port fire party
3. Providing exercises in fire, underwater hull damage, and toxic gas drills
4. Provide training in crash and salvage drills

Q9. Which of the following training requirements is provided by the damage control training team for the ship's damage control petty officers?

1. Setting requirements for material condition ZEBRA
2. Setting requirements for material condition CIRCLE X-RAY
3. Setting requirements for material condition YOKE
4. Setting requirements for material condition WILLIAM

Q10. What type of training discusses the basic parts, the functions of each part, and the operation of equipment with limiting parameters?

1. Hands-on
2. Lecture
3. Demonstration
4. Performance

SUMMARY

This chapter has introduced you to the organization and responsibilities of the damage control training team and the objectives of DCTT training. Also, the need for damage control training programs and the organization and responsibilities of the shipboard training team and the damage control training team and examples of training scenarios were provided.

For detailed information about shipboard training and development of scenarios, you should refer to *Naval Ship's Technical Manual* (*NSTM*), chapter 555; *NSTM*, chapter 079, volume II; *NSTM*, chapter 470; *NSTM*, chapter 070; *NSTM*, chapter 077; "Repair Party Manual," *Naval Warfare Publication* (*NWP*) 3-20.31; *Surface Force Training Manual* (*SFTM*), COMNAVSURFLANT/PACINST 3502.2E; and *Ship's Organization and Regulations Manual* (*SORM*), OPNAVINST 3120.32C.

REVIEW ANSWERS

A1. What person is responsible for the training teams? **(1) Team leader**

A2. One of the responsibilities of the training team is to assess the readiness and effectiveness of watchteam performance of watchstation specific tasks. **(1) True**

A3. What person is designated chairman of the planning board for training and is also the team leader for the Damage control training team (DCTT)? **(2) Executive officer**

A4. What person serves as overall manager of the training event briefs, performance, and debriefs? **(2) DCTT team coordinator**

A5. What person is responsible to complete a safety walk-thru and pre-event check prior to drill? **(4) All team members**

A6. Which of the following is NOT an objective of damage control training? **(4) Developing training reports for the engineer officer**

A7. Specific training for the damage control repair parties includes developing the ability to set material conditions. **(1) True**

A8. Which one of the following is NOT an objective of the in-port damage control training team? **(4) Provide training in crash and salvage drills**

A9. Which of the following training requirements is provided by the damage control training team for the ship's damage control petty officers? **(3) Training on setting requirements for material condition yoke**

A10. What type of training discusses the basic parts, the functions of each part, and the operation of equipment with limiting parameters? **(2) Lecture**

APPENDIX I

GLOSSARY

3-M PROGRAM—Program that requires the testing of damage control equipment and preparation of inspection reports. These actions improve the reliability of systems and equipment through documentation of maintenance information for analysis.

ABSORPTION—Penetration of solid materials or liquids by a foreign substance (such as a chemical agent) without a chemical reaction.

ACCESSMAN—The accessman will open doors, hatches, and clear routes as necessary to provide access to the fire when directed by the scene leader.

ACTIVE DESMOKING—Removing smoke and heat from the smoke control zone between the inner smoke boundary and outer smoke boundary before extinguishing the fire, aiding fire-fighting efforts, and reducing smoke spread in the ship. Active desmoking is applied only for fires that involve primarily class ALPHA and class CHARLIE materials.

ACUTE EXPOSURE—Those in which doses are received in a short time, normally less than 24 hours, as a result of exposure to initial radiation, base surge, or fallout, or combinations thereof.

ACUTE RADIATION DOSE—A dose of ionizing radiation that is received over a period of time that is too short for biological recovery to occur.

ADSORPTION—Adhesion of molecules of a foreign substance (such as a chemical agent) to the surface of solid materials (including crevices) or liquids without a chemical reaction.

AEROSOL—A suspension of fine liquid droplets or solid particles in a gaseous medium, the particles being small enough to remain suspended for a significant period of time and behave like a vapor; examples of solid particulate aerosols are dust and smoke; common liquid droplet aerosols are perfumes, oil mists, and fog.

AEROSOLIZATION—The physical process of breaking up solid or liquid into small particles or droplets and suspending them in air.

AFFF SINGLE-SPEED INJECTION PUMP—Permanently mounted, positive displacement, electrically driven, sliding-vane type of pump.

AFFF SPRINKLER SYSTEM—An AFFF sprinkler system is a subsystem of AFFF generating systems.

AFFF STATION OPERATOR—The AFFF station operator ensures that there is a constant supply of AFFF to the hose team for fire fighting.

AFFF TANKS—The tanks are rectangular or cylindrical in shape and are fabricated out of 90/10 copper-nickel or corrosion-resistant steel. Each service tank is located inside the AFFF station and is fitted with a gooseneck vent, drain connection, fill connection, liquid level indicator, recirculating line, and an access manhole for tank maintenance.

AFFF TRANSFER PUMPS—Permanently mounted, single-speed, centrifugal type, electrically driven pump. These pumps are provided in 360 gpm capacity. The transfer pump moves AFFF concentrate through the AFFF fill-and-transfer subsystem to all AFFF station service tanks on a selective basis.

AFFF TRANSFER SYSTEM—The transfer system can deliver AFFF concentrate to on-station service tanks via a transfer main. The transfer main consists of a large pipe with smaller branch connections interconnecting the AFFF service and storage tanks.

AFFF TWO-SPEED INJECTION PUMP—Designed to meet the demand for either a low or a high fire-fighting capability. The two-speed AFFF pump consists of a positive displacement pump rated at 175 psi, a motor, and a reducer, coupled together with flexible couplings and mounted on a steel base.

AFLOAT TRAINING GROUPS (ATG)—Provide Navy ships with examples and packages of recommended damage control drills.

AFTER WELL DECK—Between the upper deck and the poop deck.

AIR BLAST—The shock wave that is produced in the air by an explosion. The shock wave initially travels outward at a velocity of approximately seven times the speed of sound at high overpressures. It will then gradually slow down to a sonic speed of about 1,000 fps at low overpressures.

AIR BLAST INJURY—Personnel can be picked up and thrown by the blast. They receive their injuries upon landing. The extent of the injuries will depend upon the velocity of the body's movement, the nature of the object with which the body collides, and the nature of impact, whether glancing or solid.

AIRBURST—A burst where the point of detonation is below an altitude of 100,000 feet, and the fireball does not touch the surface of the earth. Air blast, thermal radiation (heat and light), electromagnetic pulse, and initial nuclear radiation (neutron and gamma rays) are produced around the point of detonation.

AIR CHANGE—The process of introducing a volume of air into a compartment that is equal to the volume of the compartment while simultaneously removing an equal volume. Because of mixing, only 65 percent of the air originally in the compartment is removed in one air change.

AIR CONTAMINANT—A substance or material that is foreign to the normal composition of the atmosphere, usually occurring in the form of aerosols, dusts, fumes, mists, gases, and vapors.

AIR LOCK—A shipboard passageway with a quick-acting watertight (QAWT) door on either end. Only one door is opened at a time to prevent the flow of air from a pressurized part of the ship to an unpressurized area. Air locks are also equipped with fittings to allow purging of contaminated air.

ALPHA (A) FIRES—Those that occur in such ordinary combustible materials as wood, cloth, paper, upholstery, and similar materials.

ALPHA PARTICLES—A form of ionizing nuclear radiation consisting of positively charged subatomic particles emitted by some radioactive materials. An alpha particle is identical to the nucleus of a helium atom in mass, structure, and electrical charge but an alpha particle's energy level is higher due to its speed.

ANTIFLASH CLOTHING—Intended to protect personnel from transient high temperatures that may occur from the use of high explosive weapons and from being burned in a fire. Antiflash clothing consists of an antiflash hood and antiflash gloves.

APPROVED (FOR THE PURPOSE)—Equipment or materials that have been tested, evaluated, and determined to be acceptable by a recognized testing laboratory or inspection agency according to the requirements of a particular code or specification for a particular purpose, environment, or application.

AQUEOUS FILM-FORMING FOAM FIRE EXTINGUISHER (AFFF)—Used to provide a vapor seal over a small fuel spill, to extinguish small class BRAVO fires (such as deep-fat fryers), and for standing fire watch during hot work.

AQUEOUS FILM-FORMING FOAM (AFFF)—AFFF, also known as "light water," is a synthetic, film-forming foam designed for use in shipboard fire-fighting systems.

AQUEOUS POTASSIUM CARBONATE (APC)—Are installed in Navy ships to provide protection for galley deep-fat and doughnut fryers and their exhaust systems. Aqueous potassium carbonate is specifically formulated to extinguish fire in the reservoirs by combining with the hot cooking oil surface to form a combustion-resistant soap layer, thereby cutting off the grease from its source of oxygen.

AQUEOUS SOLUTIONS—A pH of 7 indicates a neutral solution; values below 7 indicate acid solutions and values.

ATHWARTSHIP—The athwartship structure consists of transverse frames and floors and is the crosswise portion of the ship.

ATMOSPHERE—The immediate gaseous surrounding of a particular location or confined space, including normal air plus any air contaminants and oxygen deficiency/excess.

ATMOSPHERIC IONIZATION—An increase in the density of electrons in the atmosphere around a nuclear burst. These electrons affect radio and radar signals by removing energy from the waves.

ATOM—An atom is made up of tiny particles known as electrons, protons, and neutrons. The relative number of these small particles determines the attributes of an element.

ATTACK TEAM—One or two fully manned hoses, according to *NWP* 3-20.31.

ATTENUATION—The reduction in the intensity of nuclear radiation as it passes through a substance.

AUTOGENOUS IGNITION TEMPERATURE—The temperature just adequate to cause the vapors from a petroleum product to burst into flames without the application of a spark or flame.

AUTO-IGNITION POINT—The minimum temperature required to initiate self-sustained combustion of a substance independent of external ignition sources of heat.

AUTO-IGNITION/SELF-IGNITION POINT—The lowest temperature to which a substance must be heated to give off vapors that will burn without the application of a spark or flame.

AUXILIARY CIRCUITS—Auxiliary circuits duplicate primary circuits. This helps to minimize the danger of both the primary and the auxiliary circuits being placed out of commission at the same time. An X in front of the circuit designator identifies auxiliary sound-powered circuits.

BACKDRAFT—An explosion that results from combining fresh air with hot flammable fire gases when they have reached their auto-ignition temperatures.

BACKGROUND RADIATION—Low-level radiation from natural sources in the environment that is always present. The intensity varies in different regions of the world.

BACTERIA—Very small single-cell organisms, large enough to be visible through an ordinary microscope.

BALANCING VALVE—Automatically proportions the correct amount of AFFF concentrate with seawater. The balancing valve is a diaphragm-actuated control valve that responds to pressure changes between the AFFF concentrate supply line and the firemain.

BASE SURGE—Is from an underwater burst and is a rapidly expanding cloud or mist of water droplets. This cloud is produced by the collapse of the water column that was thrown up by the underwater detonation.

BATTLE BILL—The ship's Battle Bill is tailored to your ship for battle organization. You may need to provide information to the operations department when it is updated.

BATTLE DRESSING STATIONS—Most ships have a minimum of two battle dressing stations equipped for emergency handling of personnel battle casualties. Each battle dressing station must be accessible to the stretcher-bearers from repair parties within the vicinity. Medical department personnel as assigned by the senior member of that department should man each battle dressing station.

BATTLE LANTERNS—Provided throughout the ship for emergency lighting whenever normal lighting is unavailable.

BATTLE TELEPHONE CIRCUITS—The battle telephone circuits are sound-powered circuits. Therefore, they require no outside source of electrical power. The transmitter of a sound-powered telephone transforms sound waves into electrical energy. The receiver transforms this electrical energy back into corresponding sound waves.

BETA PARTICLES—A form of ionizing nuclear radiation consisting of negatively charged subatomic particles emitted by some radioactive materials. A beta particle is a high-speed electron. The mass and electrical charge of a beta particle is the same as those of an electron but a beta particle's energy level is higher due to its speed.

BIOLOGICAL VECTORS—These are animals in whose bodies the infecting organism develops or multiplies before it can infect the recipient animal.

BLACKOUT—Disruption of electronic emissions from radio and radar after a nuclear weapon explosion. It is caused by changes in atmospheric ionization.

BLISTER—An enclosed bulging bubble-like projection (as in paint) that may be filled with a liquid (saltwater or solvent) or a gas (air). Blisters can occur in any painted tank (that is, JP-5, gasoline) due to improper painting procedures, such as poor ventilation during application and curing or incomplete surface preparation. Broken blisters must be repaired because of potential for occurrence of rusting.

BLISTER AGENTS—Chemical agents that affect the eyes and lungs and blister the skin, producing long-term incapacitation or death. Blister agents are odorless and vary in duration of effectiveness. The primary blister agents, HD and HN, are most effective for general use.

BLOOD AGENTS—Chemical agents that enter the body through the respiratory tract. Most blood agents act rapidly and are normally nonpersistent. In general, a victim who does not die quickly will recover within a few hours.

BLUEOUT—Acoustic reverberation (echoes) from underwater explosions (nuclear and conventional weapons) that masks the sounds sonar is supposed to detect.

BOUNDARY (SPACES)—The outermost border or limit immediately surrounding a confined space, above, below, and on all sides, such as the outside walls of a fuel tank.

BOX PATCH—Effective for use over holes that have jagged edges projecting inboard.

BRAVO (B) FIRES—Those that occur in the vapor-air mixture over the surface of flammable liquids, such as gasoline, jet fuels, diesel oil, fuel oil, paints, thinners, solvents, lubricating oils, and greases.

BUFFER ZONE—The area between the inner and outer smoke boundaries established for a class BRAVO fire in a machinery space.

BULKHEADS—Vertical walls that run both transversely and longitudinally through the interior of a ship which divide it into compartments.

BULWARKS—Solid fencing along the gunwale of the main (weather) deck.

BUOYANCY—The ability of an object to float.

C2 CANISTER—The canister used as part of a protective mask for CB warfare.

CALCIUM HYPOCHLORITE—The standard shipboard decontaminant for chemical and biological agents.

CANISTER (AIR PURIFYING)—A container with a filter, absorbent or catalyst, or any combination thereof, which removes specific contaminants from the air drawn through it.

CANISTER (OXYGEN-GENERATING)—A container filled with a chemical that generates oxygen by chemical reaction.

CARBON DIOXIDE (CO_2)—An effective agent for extinguishing fires by smothering them and also produced by a fire when there is complete combustion of all of the carbon in the burning material. CO_2 is a colorless and odorless gas.

CARBON DIOXIDE (CO_2) FIRE EXTINGUISHER— Used on small electrical fires (class CHARLIE) and has limited effectiveness on class BRAVO fires.

CARBON DIOXIDE (CO_2) HOSE-AND-REEL SYSTEM—Consists of two cylinders, a length of special CO_2 hose coiled on a reel, and a horn-shaped nonconducting nozzle equipped with a second control valve.

CARBON MONOXIDE (CO)—A colorless, odorless, tasteless, and nonirritating gas. However, it can cause death even in small concentrations.

CASCOR—A CASCOR (Casualty Correction) is submitted when equipment, which has been the subject of casualty report, is back in operational condition. This report shall be submitted as soon as possible after the casualty has been corrected.

CASREP—A CASREP (Casualty Report) is submitted to report the occurrence of a significant equipment casualty or malfunction which cannot be corrected within 48 hours and which reduces the ship's ability to perform its mission.

CASUALTY EXPOSURE—The total gamma exposure that the commanding officer has established to identify radiological casualties; once an individual's accumulated exposure has reached this level, that person cannot be assigned duties involving additional radiological exposure without command approval.

CASUALTY POWER SYSTEM—One of the most important shipboard damage control systems. The system is a simple electrical distribution system. It is used to maintain a source of electrical power for the most vital machinery and equipment needed to keep the ship afloat or to get the ship out of a danger area. The casualty power system is intended to provide power during real emergencies only. It must NOT be used as a means of making temporary routine repairs.

CASUALTY—A person unavailable for duty because of injuries.

CEILING LIMIT—Concentration of a substance above which personnel should not be exposed, even instantaneously.

CENTER OF BUOYANCY—When a ship is floating at rest in calm water, it is acted upon by two sets of forces: (1) the downward force of gravity and (2) the upward force of buoyancy. The force of gravity is a resultant or composite force, including the weights

of all portions of the ship's structure, equipment, cargo, and personnel. The force of gravity may be considered as a single force, which acts downward through the ship's center of gravity (G).

CENTER OF GRAVITY—The point at which all the weights of the unit or system are considered to be concentrated and have the same effect as that of all the component parts.

CENTIGRAY (cGy)—An international unit of measure for absorbed radiological dose, used by other U.S. military services and allies; equivalent to a rad. One roentgen of exposure to gamma radiation results in an absorbed dose of approximately one cGy.

CENTRIFUGAL DRY SPARK ARRESTER—A device used to remove particulate suspended in incinerator smoke. It works by drawing the smoke through a cyclone chamber where the heavier particulates are thrown to the sides of the chamber by centrifugal force and then are collected and removed.

CHALK TEST—A simple means of determining if the gasket is in continuous contact with the knife-edge when a closure is dogged.

CHARLIE (C) FIRES—Fires that occur in electrical wiring or equipment.

CHEMICAL AGENT POINT DETECTOR SYSTEM (CAPDS)—The CAPDS is a local sampling detection device. It is used to detect the presence of chemical agents in the air.

CHEMICAL AGENTS—Agents that produce harmful physiological reactions when applied to the body externally, inhaled, or swallowed. Most military chemical agents cause disorganization of the functioning of the body.

CHEMICAL AND BIOLOGICAL (CB) WARFARE—To deny entry or neutralize contamination so the mission of the ship can be carried out without endangering the life or health of assigned personnel.

CHEMICAL PROTECTIVE ENSEMBLE (CPE)—The combination of all individual chemical protective equipment including suit, boots, gloves, and mask.

CHEMICAL PROTECTIVE OVERGARMENT—The chemical protective overgarment (CPO) is made of material that is permeable to water vapor; that is, it allows the escape of moisture from perspiration. The function of the CPO is to protect the wearer from threat levels of chemical agents in liquid form and from the associated vapor.

CHEMICAL, BIOLOGICAL, AND RADIOLOGICAL (CBR) BOUNDARY—A physical barrier that isolates an area not protected against CBR contamination from an area that is protected against CBR contamination.

CHEMICAL, BIOLOGICAL, AND RADIOLOGICAL (CBR) DEFENSE BILL— The CBR Defense Bill constitutes the hull-specific application of doctrinal concepts and technical procedures.

CHOKING AGENTS—Choking agents, sometimes called lung irritants, primarily injure the respiratory tract which includes the nose, the throat, and particularly the lungs where it causes pulmonary edema. In extreme cases, membranes swell, lungs become filled with liquid, and death results from lack of oxygen; thus, these agents choke an unprotected man. Fatalities of this type are known as "dry-land drownings."

CIRCLE WILLIAM—The material classification of openings and ventilation systems between the interior of the ship and the outside atmosphere that are secured to minimize the penetration of nuclear fallout, chemical agents, or biological agents.

CIRCLE XRAY—Fittings marked with a black X inside of a black circle. These modified closures are secured during conditions XRAY, YOKE, and ZEBRA.

CIRCLE YOKE—Fittings are marked with a black Y inside of a black circle. These modified fittings are secured during conditions YOKE and ZEBRA.

CIRCLE ZEBRA—Fittings are marked with a red Z inside a red circle. These modified fittings are secured during condition ZEBRA. CIRCLE ZEBRA fittings may be opened with the commanding officer's permission during prolonged periods of general quarters.

CLOSED COMPARTMENT OPENING REQUEST—A form submitted to the GFE via the chain of command requesting gas free engineering services in support of opening a closed space. This request only allows opening. Entry is authorized using the gas free certificate. This form may also be used to request other gas free engineering services, such as ventilation or planning for cold work.

CLOSURE SYSTEM—Protects the interior of the ship against the entry of aerosols and gases.

COFFERDAM—A protective space or shell surrounding a gasoline storage tank and filled with an inert gas, such as nitrogen or carbon dioxide.

COLD WEATHER BILL—The Cold Weather Bill is used to prepare the ship for cold weather operations.

COLD WORK—Operations that involve only inspections, cleaning, or minor repair where no hot work will be conducted. Examples are space inspections, spray painting, chemical cleaning, and the use of any strippers, thinners, paints, or cleaners that produce vapors.

COLLECTION, HOLDING, AND TRANSFER SYSTEM (CHT)—The system for handling sewage and wastewater.

COLLECTIVE PROTECTION SYSTEM (CPS)—A system of air locks, high-pressure fans, and high efficiency filters providing pressurized, filtered air to total protection (TP) zones and filtered air to limited protection (LP) zones. *See* TOTAL PROTECTION ZONE and LIMITED PROTECTION ZONE.

COMBAT SPECTACLES—Combat spectacles are for use with CW protective masks. The medical department is responsible for ordering and issuing combat spectacles.

COMBUSTIBLE DUST—Particles capable of undergoing combustion or burning when subjected to a source of ignition.

COMBUSTIBLE LIQUIDS—Any liquid having a flash point at or above 37.8°C (100°F) comfort of personnel.

COMBUSTION—A rapid chemical reaction that releases energy in the form of light and noticeable heat. Most combustion involves rapid OXIDATION, which is the chemical reaction by which oxygen combines chemically with the elements of the burning substance.

COMPARTMENT AIR TEST—A test of watertight compartments using compressed air.

COMPARTMENT CHECK-OFF LIST—Provides an itemized listing of all classified fittings and closures used in damage control to set the specified material condition of readiness.

COMPLETE DECK—A deck that extends from side to side and stem to stern.

CONCENTRATION—The quantity of a substance per unit volume. Examples of concentration units are milligrams per cubic meter (mg/m^3); parts per million (ppm) for vapors, gases, fumes, or dusts; fibers per cubic centimeter (fibers/cc) for vapors or gases.

CONDUCTION—Transfer of heat through a body or from one body to another by direct physical contact.

CONFINED SPACE—A space which has restricted openings for entry and exit and in which hazardous contaminants could be expected to be produced but not removed by ventilation; or in which oxygen could be expected to be depleted or enriched.

CONTACT HAZARD—A skin hazard that exists when exposure to a chemical or biological agent can result from touching a contaminated surface.

CONTAMINANT—A material or agent that is foreign to a specified or desired condition or circumstance.

CONTAMINATION CONCENTRATION—Amount of a chemical agent vapor or aerosol present in a unit volume of air; usually expressed in milligrams per cubic meter (mg/m^3).

CONTAMINATION CONTROL AREA (CCA)—The CCA is used to control access to the ship of all personnel exposed to the weather during or after a chemical, biological, and radiological attack.

CONTAMINATION CONTROL—Procedures to avoid, reduce, remove, or render harmless, temporarily or permanently, biological, chemical, or radiological contamination for the purpose of maintaining or enhancing the efficient conduct of military operations.

CONTAMINATION DENSITY—Amount of liquid or solid agent in a unit area; usually expressed in milligrams or grams per square meter (mg/M^2 or g/M^2).

CONTAMINATION—The deposition on and absorption of biological or chemical agents or radioactive material by shipboard structures, areas, personnel, or equipment; the presence of chemical or biological agents in the air in the form of vapors (chemical) or aerosols (chemical or biological).

CONVECTION—Transfer of heat through the motion of circulating gases or liquids.

CONVENTIONAL DECONTAMINATION (DECON) STATION—Conventional decontamination stations generally have saltwater nozzles in the shower stalls in addition to freshwater nozzles. Large ships may have additional saltwater decontamination stations. Multiple decon stations and the availability of both salt and fresh water provide for working around contaminated areas and battle-damaged areas.

CORROSIVE MATERIAL—A solid, liquid, or gas that degrades other substances (especially metals) through chemical action. It can burn, irritate, or destructively attack organic tissue.

COSINE—The cosine is the ratio expressed by dividing the side adjacent to the angle θ by the hypotenuse.

COUNTERMEASURES WASHDOWN (CMWD) SYSTEM—A dry-pipe sprinkler system that provides a moving screen of seawater over the weather surfaces of the ship. The flowing water carries away most of the liquid and solid contaminants that fall on the decks or bulkheads.

CPS DECONTAMINATION STATION—Four-compartment decon station with access to the weather deck in each TP zone.

CRITERIA—Those parts of a standard that establish a measurable quality; that is, specifications and inspection intervals.

CROSS CURVES OF STABILITY—For each waterline the value of the righting arm is calculated, using an ASSUMED center of gravity, rather than the TRUE center of gravity. A series of such calculations is made for various angles of heel-usually 10°, 20°, 30°, 40°, 50°, 60°, 70°, 80°, and 90°—and the results are plotted on a grid to form a series of curves.

DAMAGE CONTROL ASSISTANT (DCA)—The DCA is the primary assistant to the damage control officer in the areas of damage control; fire fighting; and chemical, biological, and radiological defense.

DAMAGE CONTROL BOOKS—These books contain descriptive information, tables, and diagrams. Each book is pertinent to an individual ship. The information given covers the following six subjects: "Damage Control Systems," "Ship's Compartmentation," "Ship's Piping Systems," "Ship's Electrical Systems," "Ship's Ventilation Systems," and "General Information."

DAMAGE CONTROL CENTRAL (DCC)—The primary purpose of DCC is to collect and compare reports. Location onboard ship where damage control operations are coordinated through and also where direction is given to repair teams.

DAMAGE CONTROL CLOSURE LOG—All ships are required to prepare and maintain a damage control closure log. The closure log is maintained at all times, whether the ship is in port or under way. The closure log is used to show where the existing material condition of readiness has been modified, the fitting's type, number, and classification, the name, rate, and division of the person who requested permission to open or close the fitting, the date and time the fitting was opened or closed, the date and time the fitting was returned to its specified material condition of readiness setting, the name and rate/rank of the person granting permission.

DAMAGE CONTROL KITS—At each repair locker a number of repair kits are made up and stowed in canvas bags. These kits are kept ready to be taken to the scene of damage. The kits should be constructed and packaged so they will fit through the smallest watertight scuttle on your ship. These kits are commonly called plugging kits, pipe-patching kits, and shoring kits.

DAMAGE CONTROL ORGANIZATION—The damage control organization consists of two elements—the damage control administrative organization and the damage control battle organization.

DAMAGE CONTROL SELECTIVE RECORDS—There is technical documentation onboard which must be maintained current for the life of the ship. Throughout the life of a ship, there may be major equipment changes or even compartment or system modifications.

DAMAGE CONTROL TRAINING—Consistent training produces an optimal level of readiness that prepares members of repair party teams to react more efficiently and effectively to actual casualties.

DAMAGE CONTROL TRAINING TEAM (DCTT)—Composed of qualified senior members of the ship's crew specifically tasked to ensure the ship's company maintains the highest level of battle readiness. This training is maintained through comprehensive training programs, which include lectures and drill scenarios.

DARKEN SHIP BILL—The Darken Ship Bill is used to ensure that all DOG-ZEBRA fittings are closed by applicable divisions whenever darken ship is ordered.

DCTT TEAM LEADER—The executive officer serves as the chairman of the planning board for training and team leader of the DCTT. The executive officer will coordinate the planning and execution of the ship's training effort. The team leader of the DCTT is responsible for the management of the training team.

DCTT TEAM COORDINATOR—The ship's senior Damage Controlman or Hull Maintenance Technician normally hold the position of DCTT team coordinator.

DECAY (RADIOLOGICAL)—The decrease in the level of radioactivity from nuclear fallout as fission fragments decompose to a more stable state.

DECKS—The floors of a ship.

DECONTAMINANT—Anything used to break down, neutralize, or remove a chemical or biological material posing a threat to personnel or equipment.

DECONTAMINATION—The process of removing radiological contaminants from a person, equipment, or structure. The process of making any person, equipment, or structure safe by absorbing, destroying, neutralizing, making harmless, or removing chemical or biological agents.

DECONTAMINATION EFFECTIVENESS—The degree to which decontamination reduces a radiation hazard. The ratio of the radiation intensity after decontamination to what it would have been without decontamination.

DEEP SHELTER—Compartments that provide shielding against radiation.

DEFICIENCY OF OXYGEN—An atmosphere where the oxygen content has been reduced below the point at which a person may work comfortably (approximately 19.5% by volume).

DELAYED FALLOUT—Fallout from a nuclear explosion that does not fall to the surface until 24 or more hours after the explosion.

DELTA (D) FIRES—Those that occur in combustible metals, such as magnesium, titanium, and sodium.

DENSITY—The density of any material, solid or liquid, is obtained by weighing a unit volume of the material.

DEPOSIT RADIATION—Radiation from radioactive particles that have landed on the ship.

DETECTOR—Any mechanism by which the approach or presence of a chemical or biological agent is made known.

DETECTOR PAPER—A specially treated paper used to determine the presence of liquid chemical agent.

DETECTOR TUBE—A glass tube that uses a sensitive chemical (in a suspension of silica gel) which produces color change whenever contaminated air is pulled through it.

DETERGENT—A synthetic cleaning and emulsifying substance usable in either fresh water or seawater for decontamination.

DIFFUSION—A process to disperse and equalize a physical state (such as temperature) or a gas (when one gas is introduced to another).

DILUTION VENTILATION—Introduces air into a space to dilute the contaminated air within the space to an acceptable level. Generally used for the control of flammable, oxygen-deficient or oxygen-enriched areas, rather than control of toxicants.

DIRECT FIRE ATTACK—A method of attacking a fire in which fire fighters advance into the immediate fire area. The extinguishing agent is applied directly onto the seat of the fire to extinguish the fire or spray a water fog (fog attack) into the hot gas layer over the seat of the fire to gain control.

DISPLACEMENT—The weight of the volume of water displaced by the hull.

DOG ZEBRA—Fittings marked with a red Z inside a black D. These modified fittings are secured during condition ZEBRA and darken ship conditions. You must have proper authorization to open fittings with this classification when the ship is at either condition ZEBRA or darken ship.

DOSE (CHEMICAL OR BIOLOGICAL)—The amount of biological or chemical agent to which a person is exposed in a given period of time.

DOSE (RADIOLOGICAL)—The total amount of ionizing nuclear radiation that is absorbed by an individual, an object, or a system over a specified time interval.

DOSE RATE (RADIOLOGICAL)—The rate at which a radiological dose is absorbed.

DOSE RATE METER—A RADIAC instrument used to measure dose rate.

DOSE RATE/SURVEY METER—The device that measures radiation intensity. This device provides the information needed to calculate the radiological hazards of occupying a contaminated area or handling contaminated equipment. It also provides the information necessary to calculate the approximate length of time personnel can safely remain in a radiological contaminated area.

DOSIMETER—A RADIAC instrument used to measure the total dose received from exposure to radiation.

DRAG FORCE—The dynamic force of wind that tends to pull down and displace structures and personnel. Drag is a directional force.

DRILL CRITIQUE—After each training evolution, the training team must conduct a debrief. It is necessary for the training team to discuss and document a list of "Lessons Learned."

DRILL GUIDE VALIDATION—Accomplished in three parts and must be conducted before its use in a drill package. "Walk-Thru" is the process of verifying "Cold Checking," and "Hot Checking."

DRY CHEMICAL EXTINGUISHER—Used primarily on class BRAVO fires. PKP is the chemical most often used in these extinguishers.

DT-60/PD—A gamma radiation dosimeter with a usable range of 10 to 600 R.

DUST—A solid, dry mechanically produced particle resulting from operations, such as sanding and grinding.

DYNAMIC OVERPRESSURE—The strong winds that accompany the air blast front that expands outward from a nuclear burst. They exert a directional force that tends to drag exposed objects and personnel along with it.

EARLY FALLOUT—Fallout from a nuclear explosion that falls to the surface within the first 24 hours after the explosion.

ELECTROMAGNETIC PULSE (EMP)—An intense electromagnetic field that builds up to maximum strength within fractions of a second after a nuclear explosion. It can damage unprotected electrical and electronic equipment by inducing strong electric currents in its circuitry.

ELECTRON—An extremely small particle of matter that orbits the nucleus of the atom. It has a negative electrical charge.

EMERGENCY CIRCUITS—Used to provide a means of re-establishing communications once a casualty has occurred to the primary lines.

EMERGENCY OVERBOARD DISCHARGE CONNECTIONS—The emergency overboard discharge connections, port and starboard, are installed through the hull of each main transverse subdivision on the damage control deck.

EMERGENCY WATER ACTIVATED REPAIR PATCH (EWARP)—A unique and easy to use pipe patch that can be used on many piping systems. The EWARP comes in a clear plastic package that includes a foil package containing the instant repair resin-coated cloth and a pair rubber gloves.

EMP OR TREE DAMAGE—System degradation in electrical or electronic equipment that requires repair or replacement of damaged components. It can be caused by electromagnetic pulse (EMP) or transient radiation electronic effects (TREE).

EQUIVALENT CRITERIA—The measurement of equivalency, which is a judgment based on the preponderance of information available.

EXERCISE CONTROL—Includes initiation of the exercise and provides responses to watch stander/team actions.

EXHAUST VENTILATION—Removes contaminated air from a compartment or space so the fresh air finds its way into the space through any available openings.

EXPLOSIVE RANGE—A scale that indicates the explosive nature of gases or vapors. The relationship of the concentration of the vapor present; its temperature and pressure is expressed as a percent by volume in air. If the explosive range falls below the lower explosive limit (LEL), the mixture of air and vapor is too lean for an explosion. If the explosive range is above the maximum explosive range or upper explosive limit (UEL), the mixture of vapor and air is too rich to be explosive.

EXPLOSIVE-PROOF—Describes an apparatus, device, or equipment that is tested and approved for use in hazardous atmospheres, as defined in the National Electrical Code©. Explosive-proof devices are designed to withstand internal explosions and prevent hot vapors or particles from exiting before they become significantly cooled.

EXPOSURE RATE (RADIOLOGICAL)—The amount of ionizing nuclear radiation per unit of time to which a person, an object, or a system is subjected; the intensity of the radiation.

EXPOSURE RATE METER—A RADIAC instrument used to measure radioactive intensity or exposure rate.

FACEPIECE—That portion of a respirator which covers the wearer's nose and mouth in a quarter-mask (above the chin) or half-mask (under the chin) or that covers the nose, mouth and eyes in a full facepiece. It is designed to make a gas-tight or particle-tight fit with the face and includes the headbands, exhalation valve(s), and connections for an air-purifying device or respirable gas source, or both.

FALLOUT—Radiological contamination formed in a nuclear surface burst consisting of radioactive particles and droplets that fall to the surface after the explosion, sometimes many miles away from the location of the detonation.

FIREBALL—A brilliantly glowing sphere of extremely hot gases formed by a nuclear explosion.

FIRE BOUNDARYMEN—The fire boundarymen set primary and secondary fire boundaries as directed by the repair party leader or fire marshal. They secure all doors, hatches, and openings in the boundary of the fire area. They remove or relocate combustibles as required. They cool boundaries with hoses as required. They are normally monitored by and report to the roving investigators.

FIRE CONTAINED—When one or more hose teams are making progress advancing on a fire and the fire is contained in a single area within a compartment. This term means the same as "Fire Under Control" and is used when reporting from the scene to avoid confusion with the term "Fire Out of Control."

FIRE-FIGHTER'S ENSEMBLE—Designed to protect the fire fighter from short duration flame exposure, heat, and falling debris. The components of the fire-fighter's ensemble include the fire-fighter's coveralls, antiflash hood, damage control/fire-fighter's helmet, fire-fighter's gloves, and fire-fighter's boots.

FIRE HOSE STATION—A fire hose station is the location where fireplug and associated equipment are stored; commonly referred to as either a fire station or a fireplug.

FIRE OUT—This is when all visible flames have been extinguished. Smoldering fires may still be present.

FIRE POINT—The temperature at which a fuel will continue to burn after it has been ignited.

FIRE TRIANGLE—Three components are heat, fuel, and oxygen. Fires are generally controlled and extinguished by eliminating one side of the fire triangle; that is, if you remove either the fuel, heat, or oxygen, you can prevent or extinguish a fire.

FIRE UNDER CONTROL—A fire under control is when one or more hose teams are making progress advancing on a fire and the fire is contained in a single area within a compartment.

FIREMAIN SYSTEM—Receives water pumped from the sea. It distributes this water to fireplugs, sprinkling systems, flushing systems, machinery cooling-water systems, washdown systems, and other systems as required. The firemain system is used primarily to supply the fireplug and the sprinkling systems; the other uses of the system are secondary.

FISSION—A nuclear reaction in which the nucleus of an atom of a heavy element splits into the nuclei of lighter elements, releasing a tremendous amount of energy.

FISSIONABLE MATERIAL—Unstable isotopes of heavy elements, such as uranium and plutonium. They can be caused to fission, or split, when impacted by free neutrons. They are radioactive, giving off alpha particles as they decay.

FLAMMABLE RANGE/EXPLOSIVE RANGE—The range between the smallest and the largest amounts of vapor in a given quantity of air that will burn or explode when ignited.

FLASH—The initial extremely bright pulse of light produced by a nuclear explosion.

FLASHOVER—A flashover is the transition from a growing fire to a fully developed fire in which all combustible items in the compartment are involved in fire.

FLASH POINT—The lowest temperature at which a flammable substance gives off vapors that will burn when a flame or spark is applied.

FLATS—Plating or gratings installed only to provide working or walking surfaces above bilges.

FLIGHT DECK—In aircraft carriers the uppermost complete deck. It is the deck from which aircraft take off and land.

FORCE—A push or pull that tends to produce motion or a change in motion. Force is what makes something start to move, speed up, slow down, or keep moving against resistance (such as friction). A force may act on an object without being in direct contact with it. The most common example of this is the pull of gravity. Forces are usually expressed in terms of *weight units*, such as *pounds*, *tons*, or *ounces*.

FORECASTLE (*pronounced folk'sul*) **DECK—**This deck is above the main deck at the bow. The part of the main deck from the stem to just aft of the anchor windlass is the forecastle.

FORWARD WELL DECK—Forward part of the main deck between the upper deck and forecastle.

FREE ELECTRON—An electron that is not part of an atom, molecule, or ion; one that has been released from an atom or molecule during the process of ionization.

FREE SURFACE EFFECT—Free surface in a ship causes a reduction in GM because of a change in the center of gravity and a consequent reduction in stability. The free surface effect is separate from and independent of any effect that may result merely from the addition of the weight of the liquid.

FREEBOARD—The distance from the waterline to the main deck.

FUEL—A solid, liquid, or even a vapor. Some of the fuels you will come into contact with are rags, paper, wood, oil, paint, solvents, and magnesium metals.

FUME—Solid particles formed by condensation of metals from the gaseous state.

FUNGI—Includes such plants as yeasts, molds, and mildews. These organisms are known for their ability to spoil foods and fabrics.

FUSION—A nuclear reaction in which the nuclei of atoms of a light element are combined to form the nucleus of an atom of a heavier element, releasing a tremendous amount of energy.

G SERIES NERVE AGENTS—Tabun (GA), Sarin (GB), Soman (GD).

GALLERY DECK—First deck or platform below the flight deck.

GAMMA RAYS—A form of electromagnetic radiation, indistinguishable from X rays.

GAS FREEING—Operations performed in testing, evaluating, removing, or controlling hazardous materials or conditions within or related to a confined space which may present hazards to personnel entering or working in or adjacent to the space.

GASKET MATERIALS—Includes sheet and strip rubber, leather, canvas, rags, oakum, and paint.

GEOPOLITICAL SITUATION—ITT leaders read geopolitical situation for the drill and refer team members to order of battle, include current readiness condition of ship, OOC, or degraded.

GROUND ZERO—The point of detonation of a nuclear surface burst on land.

GUNWALES *(pronouced gunnels)***—**The upper edges of the sides where the sheer strakes join the main deck.

HALF DECK—Any partial deck between complete decks.

HALF LIFE—The amount of time it takes for the level of radiation from any specified amount of a particular radioactive material to decrease by one half.

HALF THICKNESS—The thickness of shielding material necessary to reduce the intensity of gamma radiation that passes through it by half.

HANGAR DECK—The deck on which aircraft are stowed and serviced when not on the flight deck.

HAZARDOUS MATERIAL (HM)—Any material that, because of its quantity, concentration, or physical, chemical, or infectious characteristics, may pose a substantial hazard to human health or the environment when released.

HAZARDOUS WASTE (HW)—Any discarded material (liquid, solid, or gas) that meets the definition of HM.

HEARING CONSERVATION PROGRAM—Hearing loss has been and continues to be a source of concern within the Navy. Monitoring of the Hearing Conservation Program is the responsibility of the safety officer.

HEAT—Involves three methods-conduction, convection, and radiation.

HEAT CASUALTY—An individual unable to perform his or her duties as a result of heat exhaustion or heat stroke.

HEAT EXHAUSTION—A physical condition caused by exposure to high temperature combined with physical exertion, and marked by faintness, nausea, and profuse sweating; can be considerably reduced by proper physical conditioning and increased fluid intake.

HEAT STRESS—Heat stress is a pathological condition in which the body's cooling mechanisms are unable to dissipate the heat load generated.

HEAT STRESS PROGRAM—The Heat Stress Program establishes Navy policy and procedures for the control of personnel exposure to heat stress.

HEAT STROKE—A state of collapse or prostration, usually accompanied by high fever, brought on by exposure to heat; has a 50 percent mortality rate but accounts for only a small percentage of heat casualties.

HEPA FILTER—A high efficiency particulate air filter. HEPA filters remove solid particles and liquid droplets from an air supply.

HIGH ALTITUDE BURST—A nuclear detonation that takes place at an altitude where the atmosphere is so thin that the interaction of the explosion with the atmosphere is drastically different from that of bursts at lower altitudes; nominally, a burst at an altitude above 100,000 feet.

HOOK BOLT—A long bolt that is usually fabricated from round steel stock. Hook bolts come in a variety of diameters and shapes.

HORIZONTAL AUDIT—These audits are normally conducted on only one specific area or aspect of the QA Program (re-entry control [REC], welding, training, qualification, or testing). They focus on the particular area and do not track a job from start to finish as the vertical audit does.

HORIZONTAL LOOP FIREMAIN SYSTEM—Consists of two-single fore-and-aft, cross-connected piping runs. The two individual lengths of piping are installed in the same horizontal plane (on the same deck) but are separated athwartships as far as practical.

HOSEMAN—A hoseman runs the attack hose from the fireplug to the scene, and you will keep the hose from getting fouled while fighting the fire and relay spoken messages and orders between the on-scene leader and the nozzleman.

HOT SPOT—A localized area of a ship where chemical or biological contamination is considerably above the average of the surrounding area.

HOT SURFACE—*NSTM*, chapter 505, defines a hot surface as 650°F (343°C) for lubricating oil and hydraulic oil systems and 400F (205°C) for all other flammable liquids.

HOT WORK—Any operation that involves flame, spark, or temperatures in excess of 2050°C (4000°F).

HYCHECK VALVE—Diaphragm type, fail open, seawater pressure-operated control valve, which allows the flow of seawater from the firemain system to be mixed with AFFF concentrate.

HYDROCARBON—A compound containing only carbon and hydrogen. Hydrocarbons are the principal constituents.

HYDROGEN SULFIDE (H_2S)—Generated in some fires. It is also produced by the rotting of foods, cloth, leather, sewage, and other organic materials.

HYDROGEN-ION CONCENTRATION—Abbreviated pH, term used to express the acidity or alkalinity.

HYDROLYSIS—The decomposition of a chemical compound by reaction with water, useful in decontamination of some chemical agents, often accelerated by acid or alkaline solutions or by the presence of hypochlorite.

HYTROL VALVE—Diaphragm type, fail open, seawater pressure-operated control valve that controls the flow of AFFF solution to systems.

IGNITION—The act or action of causing a substance to burn; the means whereby a material starts burning.

IM-143/PD—Identical to the IM-9/PD except in range. The IM-143/PD indicates gamma radiation dose in the range of 0 to 600 R.

IMMEDIATELY DANGEROUS TO LIFE OR HEALTH (IDLH)—Any atmosphere that meets one or more of the following conditions-flammable vapors at a concentration of 10% or greater of the lower explosive limit (LEL); an oxygen content of less than 19.5% or greater than 22%; the presence of toxicants above a level that would allow personnel to escape within 30 minutes without impairment or irreversible health effects.

IMMINENT DANGER—A condition that immediately poses a threat of serious injury, illness, or the loss of life.

INCAPACITATING AGENTS—Used to wage and win a war without resorting to the massive killing, enormous destruction of property, and immense monetary cost.

INCENDIARIES—Incendiary weapons, unlike other chemical agents, are concerned primarily with material damage, rather than with inflicting casualties.

INCLINING EXPERIMENTS—The ship designer uses calculations to determine the vertical position of the center of gravity. From available plans and data, the various items that go to make up the ship and its load are tabulated. The ship can be considered as consisting of the various parts of the structure, machinery, and equipment. The load is comprised of fuel, oil, water, ammunition, and sundry stores aboard.

INCLINING MOMENTS—A ship may be disturbed from rest by conditions which tend to make it heel over to an angle. These conditions include such things as wave action, wind pressures, turning forces when the rudder is put over, recoil of gunfire, impact of a collision or enemy hit, shifting of weights on board, and addition of off-center weights. These conditions exert heeling moments on the ship that may be temporary or continuous.

INCOMPATIBLE HM/HW—Any hazardous materials that react with each other to produce undesirable products.

INDIRECT FIRE ATTACK—Indirect fire attack is a method of attacking a fire in which fire fighters outside the fire area discharge water fog into the fire area through a cracked open door or a bulkhead or overhead penetration.

INDIVIDUALLY DOGGED WATERTIGHT DOORS—These doors provide access/egress to compartments that are not high usage spaces, which do not require rapid access, such as paint lockers, deck gear lockers, or storerooms.

INERT GAS—A gas mixture that is nonflammable, will not support combustion, and contains a maximum of 3% by volume of oxygen.

INERTING—A process in which an inert or nonflammable gas, such as carbon dioxide, helium, argon, or nitrogen, is introduced into an atmosphere to such a degree that the oxygen/flammable vapor content of the atmosphere will not burn or explode.

INHALATION HAZARD—Since the standard protective mask provides full-face coverage, the terms *eye-respiratory hazard* and *inhalation hazard* are used synonymously.

INITIAL CERTIFICATION—The certificate issued by gas free engineering personnel as a result of initial testing.

INITIAL NUCLEAR RADIATION—The radiation (essentially neutrons and gamma rays) that is emitted by the fireball and the cloud during the first minute after detonation. All significant neutron radiation is emitted in less than 0.1 second and gamma radiation up to 20 or 30 seconds, depending on weapon yield.

INITIAL TESTING—Testing conducted on a confined space when the space is first opened after a period of closure or servicing.

IN-PORT FIRE PARTY—The in-port fire party will function as a repair party while the ship is in port. CBR defense operations are not a normal evolution for an in-port fire party.

INTERCOM UNITS—The units provide fast and dependable two-way communication between DCC and each repair party locker.

INTERFERENCE—Electromagnetic energy that decreases clear reception of radio or radar signals.

INTERNAL HAZARD—Radioactive material that is taken into the body by respiration, ingestion, or absorption through open wounds into the bloodstream.

INTRINSICALLY SAFE—An item or piece of equipment which by design does not have, or is not capable of producing, sufficient levels of energy to cause ignition. An intrinsically safe device can be operated in a hazardous atmosphere without igniting that atmosphere.

INVESTIGATOR—Investigators are assigned to repair lockers to ensure that no further damage occurs outside the boundaries of the existing casualty. Investigators normally operate in pairs, traveling assigned routes and reporting conditions to the repair locker.

ION—An atom or molecule that has lost an electron and taken on a positive electrical charge or one that has gained an electron and become negatively charged.

IONIZATION—A process in which electrically neutral atoms or molecules are changed into charged particles by the loss or addition of electrons.

IONIZING RADIATION—Energy in the form of electromagnetic emissions or subatomic particles that interact with electrically neutral atoms or molecules, changing them into charged particles (ions).

IRRITANT—Substance which when in contact with living tissue can cause burning or itching.

ISOLATION—A process whereby a confined space is removed from service and completely protected against the inadvertent release of hazardous material into the space. Isolation can be accomplished by blanking off; blocking/disconnecting all mechanical linkage, electrical isolation, or other specified means.

ISOMETRIC DIAGRAM—The isometric damage control diagram diagrams each deck or platform and is shown at a separate level. They also show piping systems as close as possible to their actual shipboard locations. Usually the isometric damage control diagrams are not drawn to scale.

ISOTOPES—Different forms of a chemical element that have the same chemical characteristics but different atomic masses due to variations in the number of neutrons.

JP-5—A high flash point, kerosene-type aircraft turbine fuel, specifically designed for storage and use on naval ships.

KEEL—The keel is the backbone of the ship.

KILOTON—Nuclear weapon yield equivalent to the explosive energy released by 1,000 tons of TNT.

LIMITED PROTECTION (LP) ZONE—A zone within a collective protection system that provides protection against liquid and solid CBR agents but not agents in vapor form.

LINE SOURCE—A continuously moving munition or device that releases chemical or biological agent along its path.

LONGITUDINAL FRAMES—Frames running parallel with the keel.

LONGITUDINAL STABILITY—The tendency of a ship to resist a change in trim.

LOOSE WATER—Used to describe liquid that has a free surface; it is NOT used to describe water or other liquid that completely fills a tank or compartment and thus has no free surface.

LOWER EXPLOSIVE LIMIT (LEL)—The minimum percent by volume of a gas that, when mixed with air at normal temperature and pressure, will form a flammable mixture.

LOWER FLAMMABLE LIMIT (LFL)—The minimum concentration of a combustible gas or vapor in air, usually expressed in percent by volume at sea level, which will ignite if a sufficient ignition source of energy is present.

MACHINERY SPACE—Machinery space is main and auxiliary machinery spaces that contain any of the following: installed fire-fighting systems, oil-fired boilers, internal combustion engines, gas turbines, or steam turbines.

MAGAZINE SPRINKLER SYSTEMS—Sprinkler systems are used for emergency cooling of, and fire fighting in, magazines, ready-service rooms, ammunition, and missile handling areas. A magazine sprinkler system consists of a network of pipes. Magazine sprinkler systems can completely flood their designated spaces within an hour.

MANNED HOSE—Manned hose is a single fire hose manned with a nozzleman and hosemen (as required).

MASK ONLY—A protective posture that provides personnel relief from wearing the complete chemical protective ensemble.

MASTER COMPARTMENT CHECK-OFF LIST (CCOL)—A master CCOL is developed for each ship at the time of its construction. CCOLs are provided in each compartment of the ship and provide information on all fittings within the compartment.

MATERIAL CONDITIONS OF READINESS—Refers to the degree of access and system closure in effect at any given time.

MATERIAL SAFETY DATA SHEET (MSDS)—A written or printed document about a hazardous material that is prepared and submitted by a manufacturer, product supplier, or distributor. Each MSDS contains the data elements required in 29 CFR 1910.1200.

MAXIMUM PERMISSIBLE EXPOSURE (MPE)—The total radiological exposure that the commanding officer will allow any individual to accumulate without command approval; personnel are rotated through vital stations near hot spots to prevent any individuals from exceeding this total.

MECHANICAL VECTORS—These are animals that transmit infective organisms from one host to another but, in themselves, are not essential to the life cycle of the parasite.

MECHANICAL VENTILATION—Provides fresh air when needed, independent of the direction of the wind or temperature.

MEGATON—Nuclear weapon yield equivalent to the explosive energy released by 1,000,000 tons of TNT.

MESSENGER—Individual responsible to relay orders and information. These messages will normally be relayed between the scene, the repair locker, and, if in port, the quarterdeck.

METACENTER—The intersection of two successive lines of action of the force of buoyancy, as the ship heels through a very small angle.

METACENTRIC HEIGHT—The distance from the center of gravity to the metacenter.

METHODS OF DAMAGE CONTROL TRAINING—There are many examples of effective training methods. One is lectures on various portable and installed damage control equipment. The lecture method of training discusses the basic parts, the functions of each part, and the operation of equipment with limiting parameters. Another method of training is hands-on training, sometimes called demonstration/performance; for example, having the trainee demonstrate the proper setup and operation of the P-100 fire-fighting pump.

MICRON—A unit of length equal to one millionth of a meter, or one thousandth of a millimeter.

MICROORGANISMS—Microbes, or minute, living organisms too small to be seen with the unaided eye.

MISCELLANEOUS CIRCUITS—There are several miscellaneous circuits that provide for the transmission of information of direct interest to damage control stations.

MISSILE HAZARD—An object that could become dislodged by a sudden shock or ship motion and cause injury to personnel.

MISSION ORIENTED PROTECTIVE POSTURE (MOPP)—Mission oriented protective posture (MOPP) is the level of CBR protection directed by a ship's commanding officer. Levels of protection range from 1 to 4, with 4 being fully protected.

MOGAS—Combat automotive gasoline that has a low octane rating that may cause knocking in engines. The relative amount of lead influences the octane rating.

MOLECULE—A combination of atoms of the same or different elements in which electrons are shared but the nuclei remain separate and distinct.

MOMENTS—In addition to the size of a force and its direction of action, the location of the force is important. The effect of the location of a force is known as the MOMENT OF FORCE. It is equal to the force multiplied by the distance from an axis about which you want to find its effect. The moment of a force is the tendency of the force to produce rotation or to move the object around an axis.

MONITORING—The continued or periodic act of seeking to determine whether chemical, biological, or radiological contamination is present.

MULTIGAS DETECTOR (DRAGER)—A single multi-purpose gas detector pump with calorimetric tubes used to detect over 100 toxic gases/vapors.

MYCOTOXIN—A naturally occurring toxin produced by certain types of fungi that are potential biological warfare agents. Tricothecenes are an example.

MYOSIS—Excessive contraction of the pupils of the eyes caused by exposure to minute quantities of nerve agents; the pupil is unable to dilate and remains contracted, and task performance is severely impaired or impossible, often accompanied by pain and a headache.

NAVAL SHIPS' TECHNICAL MANUAL (NSTM)—These manuals cover different aspects of damage control, which include the following: fire fighting, flooding, ship's stability, and CBR countermeasures. Study of the NSTMs will help you complete your damage control personnel qualification standards.

NAVY OCCUPATIONAL SAFETY AND HEALTH (NAVOSH) STANDARDS—Occupational safety and health standards published by the Navy which include, are in addition to, or are alternatives for, the OSHA standards which prescribe conditions and methods necessary to provide a safe and healthful working environment.

NEGATIVE PRESSURE—A pressure less than atmospheric pressure. Gases and liquids flow from higher pressure to lower pressure areas; air is drawn into an area of negative pressure.

NERVE AGENTS—These agents radically disturb the chemical processes of the nervous system, which impairs or stops other bodily functions.

NEUTRON—A subatomic particle that is electrically neutral.

NIOSHIMSHA—National Institute of Occupational Safety and Health/Mine Safety Health Administration.

NONPERSISTENT AGENT—A chemical agent that when released, dissipates or loses its ability to cause casualties after a few minutes.

NOZZLEMAN—The nozzleman mans the attack hose nozzle so that the fire may be extinguished.

NUCLEAR BURSTS—An explosion resulting from a fission or fusion reaction.

NUCLEAR RADIATION—The four types of nuclear radiation released as the result of a nuclear explosion are alpha particles, beta particles, gamma rays, and neutrons.

NUCLEAR RADIATION INJURY—Unlike injuries from other weapon effects, nuclear ionizing radiation injuries may not become evident immediately unless a high enough dose is received. Nuclear radiation, even in very small doses, has some harmful effects on the body.

NUCLEUS—The central region of an atom, composed of protons and neutrons.

ODOR THRESHOLD LIMIT—The lowest concentration of a contaminant in the air that produces a scent that humans can smell.

ON-SCENE LEADER—The on-scene leader is the person in charge at the scene.

ON-STATION MONITORING—This information is used in determining when fallout ceases and in estimating accumulated doses at these locations.

OSHA STANDARDS—Those standards issued by the Department of Labor's Occupational Safety and Health Administration pursuant to section 6 of the OSHA.

OUTGAS—To remove imbedded gas from a substance by heating.

OUTSERTS—Clear plastic outserts that fit over the mask lens. They protect the lens from scratches when they are stored in the carrier, and they protect the lens from chemical agent droplets, oil, and other petroleum products when the mask is worn.

OVERHAUL—An examination and cleanup operation. It includes finding and extinguishing hidden fire and hot embers and determining whether the fire has extended to other parts of the ship.

OXIDIZING MATERIAL—A chemical compound that spontaneously releases oxygen at normal temperature and air pressure or under slight heating.

OXYGEN—The content of the surrounding air. Ordinarily, a minimum concentration of 15% oxygen in the air is needed to support flaming combustion.

OXYGEN BREATHING APPARATUS (OBA)—An entirely self-contained breathing apparatus. It enables the wearer to breathe independently of the outside atmosphere. It produces its own oxygen from chemical reaction and allows the wearer to enter compartments, voids, or tanks that contain smoke, dust, or fire, or those that have a low oxygen content.

OXYGEN INDICATOR—Measures atmospheric concentrations of oxygen over a range of 0-25%. Typical application is to check for potential oxygen-deficient atmospheres during post fire operations.

OXYGEN-DEFICIENT ATMOSPHERE—Any oxygen concentration less than 19.5% at normal atmospheric pressure.

OXYGEN-ENRICHED ATMOSPHERE—Any oxygen concentration greater than 22% by volume at normal atmospheric pressure.

PARTICULATE MATTER—Solid contamination appearing as dust, powder, grains, flakes, fiber, or stains, usually removable by settling, filtration, or centrifugal purification.

PATCHING MATERIALS—Prefabricated wooden box patches in various sizes, rags, pillows, mattresses, blankets, kapok life jackets, metal plate, folding metal plate patches, flexible sheet metal patches, prefabricated steel box patches, bucket patches, and welded steel patches.

PATHOGENS—Living organisms that include bacteria, viruses, rickettsias, fungi, and protozoa.

PERCUTANEOUS HAZARD—A chemical or biological agent that can harm the skin or enter the body through unbroken skin. Also called a skin hazard.

PERIODIC TESTING—Testing conducted during the course of an operation at intervals greater than 15 minutes, based on the nature of the space, its contents, and the nature of the operation.

PERMEABLE—Having pores or small openings that allow passage of some liquids or gases. For example, the material from which the chemical protective overgarment (CPO) is made is permeable to water vapor.

PERMISSIBLE EXPOSURE LIMIT (PEL)—The maximum permissible concentration of a toxic chemical or exposure level of a harmful physical agent to which personnel may be exposed. PEL is based on a time-weighted average (TWA) for a normal 8-hour day, 40-hour, 7-day week.

PESTS—The meaning of the term *pest* as used here is restricted to certain animals (excluding microorganisms) that interfere with the health of other organisms. Pests are known as parasites when they obtain their food from living host cells.

PHONE TALKER—The phone talker mans the phone between the supervisor at their location and other stations and receives messages from other phone talkers and relays them to their supervisor.

PLATFORMS—Partial decks below the lowest complete deck used broken to admit machinery or other spaces and are called platform decks or just platforms.

PLUGGING MATERIALS—Plugging materials include wooden plugs and wedges and wooden shoring.

PLUGMAN—The plugman connects the hose to the fireplug, and when directed to do so and while the nozzle is closed, open the fireplug valve to activate the hose.

POOP DECK—A partial deck above the main deck located all the way aft.

PORTABLE SUBMERSIBLE PUMPS—The portable submersible pump used aboard naval ships is a centrifugal pump driven by a water-jacketed constant speed ac electric motor and may be designed to operate as single or three phase at 120, 240, or 440 volts.

POWERCHECK VALVE—Diaphragm type, normally closed, seawater pressure-operated control valve. This valve allows the flow of AFFF from the pump to be mixed with seawater and protects the AFFF tank from seawater contamination or dilution.

POWERTROL VALVE—Diaphragm type, normally closed, seawater pressure-operated control valve. This valve allows the flow of AFFF/seawater solution through the distribution system or controls seawater flow on flight deck injection systems.

PRESSING-UP—The process of completely filling a space with liquid to displace flammable vapor/air mixtures.

PRESSURE LOCK—A shipboard passageway with a quick-acting watertight (QAWT) door on either end. Only one door is opened at a time to prevent the flow of air from a pressurized part of the ship to an unpressurized area. Unlike an air lock, a pressure lock does not have air sweep fittings for purging contaminated air. Therefore, it is not used in a contaminated environment.

PRE-WETTING—Activation of the Countermeasure Washdown System before the arrival of chemical and biological contamination.

PRIMARY CIRCUITS—The number of primary circuits used within the sound-powered battle telephone system varies among ships. The size and type of your ship normally determines the choice of circuits.

PROTECTION FACTOR—The reciprocal of a transmission (or shielding) factor. A radiation measurement at an interior location can be multiplied by the protection factor for that space to estimate the radiation level at the corresponding exterior location. A protection factor is always greater than one. Multiplying by a protection factor is mathematically equivalent to dividing by a transmission factor.

PROTECTIVE MASK—A primary means of defense against CB agents is the protective mask. The mask is designed to protect the face, eyes, and the respiratory tract of the user from tactical concentrations of chemical and biological agents, toxins, and radioactive fallout particles.

PROTECTIVE SHIELDING—A method of defense against nuclear radiation.

PROTON—A subatomic particle that has a positive electrical charge.

PROTOZOA—Single-celled, animal-like forms that occur in a variety of shapes and often have complicated life cycles.

PROTRACTED EXPOSURE—Those in which doses are received over a longer period of time, normally greater than 24 hours, as a result of exposure to fallout.

PURGING—The method by which gases, vapors, or other airborne impurities are displaced from a confined space.

PURPLE-K-POWDER (PKP)—Potassium bicarbonate powder used to extinguish class BRAVO and class CHARLIE fires.

QA AUDITS—Audits provide a means of comparing the records of completed jobs to their requirements in order to ensure compliance.

QUALIFIED PERSON—A person designated, in writing, as capable (by education or specialized training) of anticipating, recognizing, and evaluating personnel exposure to hazardous substances or other unsafe conditions in a confined space. This person shall be capable of specifying necessary control or protective action to ensure personnel safety.

QUANTAB CHLORIDE TITRATOR V—Quantab chloride titrator strips are used to measure salt (chloride) in aqueous solutions.

RAD—A unit of energy absorbed from ionizing radiation absorbed from ionizing radiation, equal to 100 ergs per gram of irradiated material. An added factor in the use of a rad is that it expresses the dose from any type of radiation, whereas the roentgen relates only to gamma radiation or X rays.

RADIAC—The acronym for Radiation, Detection, Indication, and Computation.

RADIATION—Transfer of heat from a source across an intervening space, no material substance is involved.

RADIATION SICKNESS—The disease resulting from excessive exposure of the body to ionizing radiation.

RADIOACTIVE CLOUD—A cloud formed from the material that was vaporized in the fireball.

RADIOACTIVE DECAY—A decrease in the level of radioactivity from a radioisotope as it decomposes to a more stable condition.

RADIOACTIVE WATER POOL—A surface or underwater nuclear detonation creates a radioactive water pool in the area of the detonation. This pool expands outward rapidly from SZ, for about 2 minutes, and continues to expand more slowly.

RADIOACTIVITY—The release of nuclear radiation from a nuclear reaction or nuclear decay.

RADIOLOGICAL ASSESSMENT—Prediction of radiation intensity based on the decay of radioactive substances.

RADIOLOGICAL CONTROL—Minimizing the exposure to nuclear radiation and radioactive contamination.

RADIOLOGICAL DELINEATION—Determination of the location of radioactive contamination and the radioactive intensity of the radiation in the surrounding area.

RAINOUT—Radioactive rain that results when the cloud from a nuclear burst joins a rain cloud.

RAPID EXTERNAL SURVEY—Sometimes referred to as the gross external survey, is conducted after the rapid internal survey to obtain more precise radiation levels at topside vital stations and at contaminated areas that are irradiating internal vital stations. As in the rapid internal survey, the focus is on getting an accurate measurement quickly at action stations and expeditiously reporting the results.

RAPID INTERNAL SURVEY—Performed immediately after the cessation of fallout to get an indication of the severity of the radiation hazard at specific locations, primarily action stations. Safe stay times for interior vital stations can be calculated based on the rapid internal survey.

RATE OF ACTION—The rate at which a body reacts to or is affected by that agent. There is a wide variation in the rate of reaction to the toxic chemical agents, even to those of similar tactical or physiological classifications.

RATE OF DETOXIFICATION—The rate at which the body counteracts the effects of a chemical agent. It is an important factor in determining the hazards of repeated exposure to sublethal doses of toxic chemical agents.

REACTIVE MATERIAL—A solid, liquid, or gas that is chemically unstable at normal temperature and air pressure; capable of undergoing violent change when subjected to heat, shock, mixture with water, or other chemicals.

READY SHELTER—If the ship is warned enough in advance, personnel topside shall be ordered to ready shelter before the arrival of the base surge or fallout. Taking ready shelter is both a contamination avoidance measure and a radiation mitigation technique.

REFRACTOMETER—Gives accurate readings of total dissolved solids in aqueous solutions.

RELAY LANTERNS—Installed throughout the ship to provide limited illumination when other sources fail.

REPAIR PARTIES—Qualified shipboard personnel responsible for executing damage control duties in a training or actual damage control situation.

REPAIR PARTY MANUAL—The repair party manual provides detailed information on the standard methods and techniques used in damage control as outlined in *NWP* 3-20.31.

RESCUE AND ASSISTANCE BILL—The Rescue and Assistance Bill organizes qualified personnel by duty section or the entire ship to render emergency assistance outside the ship.

RESERVE BUOYANCY—The volume of the watertight portion of the ship above the waterline. Expressed as a percentage, reserve buoyancy is the ratio of the volume of the above-water body to the volume of the underwater body.

RESIDUAL RADIATION—Nuclear radiation released after a nuclear explosion from fission products in fallout, rainout, base surge, and radioactive pool.

RETESTING AND RECERTIFYING—The process of testing, evaluating, and certifying a confined space by the gas free engineer using the same procedures required for initial testing and certification when the certificate expires without entry, work, or test and updating of the certificate; or when conditions occur which alter the initial conditions found or specified.

RICKETTSIAE—Intracellular, parasitic microorganisms that are intermediate in size between bacteria and viruses.

ROENTGEN (R)—A unit of exposure to gamma or X radiation.

ROLLOVER—A sudden spread of flame through the unburnt gases and vapors in the upper layer across the overhead of a space.

SAFE STAY TIME—The time personnel can remain in the vicinity of a radioactive hot spot without exceeding their maximum permissible exposure (MPE).

SAFETY—Safety is a primary concern during all training events. If an unsafe condition exists, the training event should be STOPPED until a safe condition is established. During training, planning, and operations, the operational risk management (ORM) process must be used. The training team leaders are responsible for ensuring that proper procedures are used in planning training events.

SCINTILLATION—The distortion of a very high-frequency electromagnetic signal as it passes through layers of beta particles from a nuclear explosion at altitudes above 35 miles.

SECONDARY HAZARD—A chemical or biological hazard that does not develop during the delivery of the agent on target, but develops later.

SECURING MATERIALS—Includes assorted hook bolts, manila line, wire rope, chain, machine bolts, angle clips for welding, and shoring. Backup materials include mess tables, metal joiner doors, buckets, plywood or lumber, sheet metal, and metal plate.

SELF-CONTAINED BREATHING APPARATUS (SCBA)—Type of respirator that allows the user complete independence from a fixed source of air.

SHELF LIFE—A period of time for which an instrument can be used without degradation, usually specified by the manufacturer.

SHIELDING FACTOR—A fraction, always less than one, that represents the proportion by which shielding attenuates gamma radiation.

SHIP INFORMATION BOOK—When a ship is built for the Navy, the builder prepares a ship information book (SIB). The ship's crew uses the SIB to familiarize themselves with the ship's characteristics. Normally the SIB will contain the following eight volumes—*Hull and Mechanical; Propulsion Plant; Auxiliary Machinery, Piping, Ventilation, Heating, and Air-Conditioning Systems; Power and Lighting Systems; Electronic Systems; Interior Communications; Weapons Control Systems; and Ballasting Systems*.

SHIP'S DRAWING INDEX (SDI)—The SDI is kept in the engineering department office (log room). The SDI lists all working drawings that have a NAVSHIPS or NAVSEA drawing number, all manufacturer's drawings, all equipment drawing lists, and all assembly drawings that list detail drawings.

SHIPBOARD TRAINING TEAMS—Training teams include a core group of the most knowledgeable and experienced personnel from the ship. The size of the crew, number of qualified personnel, complexity of the exercise, and safety requirements will influence the size of the team.

SHIP'S GENERAL ANNOUNCING SYSTEM (1MC CIRCUIT)—The ship's general announcing system used to pass information to the ship's crew on a regular basis each day. It is also another means of damage control communication because information can be passed throughout the ship. The 1MC system should be used only to pass warnings or vital information that affects the entire ship's company.

SHIP'S SERVICE TELEPHONES—Telephones for damage control communications when there are telephones installed at or near repair party lockers. The ship's service telephones are standard telephones.

SHIPS' DRAFT—The vertical distance from the keel to the waterline.

SHOLE—A flat block that may be placed under the end of a shore to distribute pressure.

SHORE—A portable beam.

SHORT-TERM EXPOSURE LIMIT (STEL)—The maximum concentration of a substance to which personnel can be exposed for up to 15 minutes without significant physiological effects (i.e., irritation, narcosis, impairment of self-rescue), provided that no more than four exposures per day are permitted and at least 60 minutes elapses between exposure periods.

SHORT-TERM LETHAL CONCENTRATION (STLC)—A concentration of a substance that is lethal within 10 minutes of exposure.

SINE—In trigonometry, angles are represented by the Greek letter theta (θ). The sine of an angle θ, abbreviated as $\sin \theta$, is the ratio expressed when the side of a right triangle opposite the angle θ is divided by the hypotenuse.

SINGLE MAIN FIREMAIN SYSTEM—Consists of a single piping run that extends fore and aft. This type of firemain is generally installed near the centerline of the ship, extending forward and aft as far as necessary.

SKIN DOSE—Radiation from a source outside the body, possibly on the skin, that can damage the skin.

SMOKE CONTROL ZONE—The area between the inner and outer smoke boundaries established for fires that involve primarily class ALPHA or class CHARLIE materials.

SOFT PATCH—A patch used to repair small holes or cracks in low-pressure (150 psi) piping.

SOLENOID-OPERATED PILOT VALVE (SOPV)—Electrically operated pilot valves that control the activation of many AFFF fire-extinguishing systems. All SOPVs (master and service) have four control line ports; one port is always connected to supply pressure (firemain), and a second port is the valve drain (which should be piped to discharge within the coaming of the AFFF station).

STABILITY CURVES—When a series of values for GZ (the ship's righting arm) at successive angles of heel are plotted on a graph, the result is a stability curve, also called the curve of static stability.

STANDBY PERSON—The person trained in emergency rescue procedures assigned to remain on the outside of the confined space and to be in communication with those working inside.

STATIC OVERPRESSURE—A sudden, non-directional increase in air pressure caused by the passage of the air blast wave from a nuclear burst.

STEAM BLANKETING—A method for making the outer boundaries of a space safe for hot work by using steam to displace and carry off flammable vapor/air mixtures within a space.

STORAGE—The holding of HM or HW for a temporary period, after which time the HM is used or stored elsewhere, or the HW is treated, disposed of, or stored elsewhere.

STRAKES—The hull plating fastened to the framework in longitudinal rows.

STRENGTH DECK—Deck designed to carry not only deck loads on it but also the hull stresses.

STRETCHER-BEARER—The stretcher-bearer is required to take the repair locker first-aid kit, or box, to or near the scene. If medical department personnel are available, they will help them in administering first aid, as required.

STRONGBACK—A bar or beam of wood or metal that is used to distribute pressure or to serve as an anchor for a patch. The strongback is often shorter than a shore.

SUBATOMIC PARTICLE—One of the components of which all atoms are composed (electron, proton, and neutron).

SUPERSTRUCTURE DECK—A partial deck above the main, upper, or forecastle deck that does not extend to the sides of the ship (if it does, it does not have the side plating carried up to it.).

SUPPLEMENTARY CIRCUITS—Primary circuits related to their principal functions. However, when the circuit is also used for damage control communications, the circuit is considered as a supplementary circuit.

SUPPLEMENTARY SURVEYS—Conducted to confirm or revise stay time calculations. They may also be ordered to localize hot spots for decontamination. Supplementary surveys of interior spaces shall include beta monitoring to detect intrusion of contamination.

SUPPLY VENTILATION—Moving fresh air into a compartment or space and displacing contaminated air through any available openings.

SURFACE BURST—A nuclear detonation in which the fireball is in contact with the surface of land or water.

SURFACE ZERO—The point of detonation of a nuclear surface burst on water.

SURVEY—The effort to determine the location and nature of the chemical, biological, and radiological contamination and radiation on or in a ship.

TANGENT—The tangent of the angle θ is the ratio of the side opposite the angle θ to the side adjacent.

TEAM LEADER—The team leader directs the efforts of attack teams to extinguish or overhaul a fire.

TEAR AGENTS—Tear agents (also known as riot-control agents) are essentially local irritants, which, in very low concentrations, act primarily on the eyes, causing intense pain and a considerable flow of tears; stinging of warm, moist skin; and irritation of the nose. High concentrations produce irritation of the upper respiratory tract and lungs and cause nausea and vomiting. The agents may be either solids or liquids and may be dispersed in the air as vapors or smokes.

THERMAL RADIATION—Electromagnetic emissions in the form of light and heat.

THERMAL RADIATION INJURY—Can cause burn injuries directly when the skin absorbs radiant energy. It can also cause burn injuries indirectly as a result of fires started by the radiation. The flash of thermal radiation from the fireball produces direct burns, called flash burns. The indirect, or secondary, burns are called flame burns. These burns are like the skin burns that are caused by any large fire, no matter what its origin.

THRESHOLD LIMIT VALUES (TLV)—Levels of airborne concentrations of physical agents, expressed in parts per million (ppm), that represent conditions under which average personnel may be repeatedly exposed, during normal working hours, without adverse effects.

TOTAL PROTECTION (TP) ZONE—A zone within a collective protection system that provides protection against liquid, solid, and gaseous CBR agents.

TOXIC GAS BILL—The Toxic Gas Bill specifies the procedures and assigns duties and responsibilities for controlling and minimizing toxic gas casualties.

TOXIC MATERIAL—A solid, liquid, or gas that can damage living material, impair the central nervous system, or cause illness or death through inhalation, ingestion, or skin absorption.

TOXIC OR HAZARDOUS ATMOSPHERE—An atmosphere containing a concentration of air contaminants sufficient to cause injury to personnel.

TOXICITY—The property of a material to cause injury to an organism with the maximum result being incapacitation or death.

TOXICITY LIMITS—The limits of a vapor from a certain minimum concentration (lower limit) to a maximum concentration (upper limit).

TOXINS—Poisonous products of living organisms that, when inhaled, swallowed, or injected into man or animals, will cause illness or death.

TRAINERS, EVALUATORS, AND SAFETY OBSERVERS—Trainers, evaluators, and safety observers directly observe individual and team performance of the training event and some may act as initiators.

TRANSFER HAZARD—Radioactive contamination that can be spread from a contaminated area to a clean area by foot traffic or some other form of physical contact.

TRANSIENT DOSE—A term used in some texts to describe the radiological dose received from the time of arrival of fallout or the base surge to the time of cessation of fallout.

TRANSIENT RADIATION EFFECTS ON ELECTRONICS (TREE)—Caused by initial gamma and neutron emissions from a nuclear burst. These emissions result in the failure or degraded operation of sophisticated solid-state circuits.

TRANSIT RADIATION—Radiation from radioactive particles or droplets in the environment around the ship.

TRANSMISSION FACTOR—A fraction, always less than one, that represents the proportion by which shielding attenuates gamma radiation.

TRIMMING MOMENT—A forward (or aft) movement of weight.

UNDERGROUND BURST—A nuclear explosion centered below the surface of the ground.

UNDERWATER BURST—A nuclear burst centered below the surface of a body of water.

UNDERWATER SHOCK—A pressure wave that travels outward in water from an explosion at or under the surface.

UNDERWATER SHOCK INJURY—Injury among topside and below-deck personnel by the rapid upward movement of the deck.

UPPER DECK—A partial deck extending from side to side above the main deck amidships.

UPPER EXPLOSIVE LIMIT (UEL)—Upper end of the explosive range. Concentrations above this limit are too rich to explode or burn. Concentrations below the LTEL are within the explosive range.

UPSET (EMP, TREE)—Temporary degradation in an electrical or electronic system caused by electromagnetic pulse (EMP) or transient radiological effects on equipment (TREE).

VAPOR—Gas state of a substance.

VAPOR SECURE—Establishing a film or foam blanket over flammable liquid to prevent vaporization.

VAPORIZATION—To pass into the gas or vapor state.

VECTORS—Disease vectors are animal carriers that transfer infective agents from one host to another. They usually are arthropods (insects, arachnids, and crustaceans) but may be other animals.

VENTILATING—The process of moving air into or from a compartment or space.

VERTICAL AUDIT—These audits take into account all aspects of a job or task by examining the documentation used to certify or recertify the system/component during and after repairs. These audits may examine any aspect of the task (training and qualification of personnel, technical and production requirements, cleanliness, or material control).

VERTICAL OFFSET LOOP FIREMAIN SYSTEM—Consists of two single piping runs, installed fore and aft in an oblique (that is, angled) plane, separated both vertically and athwartship, connected at the ends to form a loop. The lower section of the firemain is located as low in the ship as practical on one side, and the upper section is located on the damage control deck on the opposite side of the ship. Athwartship cross-connects are usually provided at each pump riser.

VIRUSES—A group of parasitic microorganisms that live in the cells of their selected hosts.

VOLATILITY—The readiness of a liquid to vaporize or evaporate. The tendency to be readily diffused or dissipated in the atmosphere, especially at ordinary temperatures.

VOMITING AGENTS—These agents are dispersed as aerosols and produce their effects by inhalation. These agents produce minor eye irritation and a feeling of pain and sense of fullness in the nose and sinuses.

WATERLINE—The water level along the hull of a ship afloat.

WATERTIGHT INTEGRITY—The degree of quality of watertightness.

WEATHER DECK—A deck or part of a deck exposed to the weather.

WEATHERING—The process by which radiological contamination is removed from the ship's surface areas by the natural action of the environment, especially wind and rain.

WEDGE—A block, triangular on the sides and rectangular on the butt end.

WEIGHT—If you know the volume of an object and the density of the material, the weight of the object is found by multiplying the volume by the density. The formula for this is as follows: W = V x D (weight = volume times density).

WILLIAM FITTINGS—Marked with a black W, these fittings are kept open during all material conditions. WILLIAM fittings are secured only as necessary to control damage or CBR contamination and to make repairs to the equipment served.

YIELD—The energy released in a nuclear explosion stated in terms of the tonnage of TNT required to release an equivalent amount of energy.

APPENDIX II

DAMAGE CONTROL ABBREVIATIONS

3-M	Maintenance, Material, and Management
ABT	Automatic Bus Transfer
ACPG	Advanced Chemical Protective Garment
AMR	Auxiliary Machinery Room
AFFF	Aqueous Film-Forming Foam
BW	Biological Warfare
BS&W	Bottom Sediment and Water
CANTRAC	Catalog of Navy Training Courses
CASCOR	Casualty Correction
CASREP	Casualty Report
CBR	Chemical, Biological, and Radiological
CDO	Command Duty Officer
CCOL	Compartment Check-Off List
CCS	Central Control Station
CHT	Collecting Holding Transfer
CMWD	Countermeasure Washdown System
CO	Carbon Monoxide
CO_2	Carbon Dioxide
COSAL	Coordinated Shipboard Allowance List
CPO	Chemical Protective Overgarment
CPR	Cardiopulmonary Resuscitation
CPS	Collective Protection System
CW	Chemical Warfare
DCA	Damage Control Assistant
DCC	Damage Control Central
DCPO	Damage Control Petty Officer
DCS	Damage Control Supervisor
DCTT	Damage Control Training Team
ECCTT	Engineering Casualty Control Training Team
EDG	Emergency Diesel Generator
EDO	Engineering Duty Officer
EDORM	Engineering Department Organization and Regulation Manual
EEBD	Emergency Escape Breathing Device
EMP	Electromagnetic Pulse
ENGREAD	Engineering Readiness Advisory
EOCC	Engineering Operational Casualty Control
EOOW	Engineering Officer of the Watch
EOP	Engineering Operational Procedures
EOS	Engineering Operating Station
EOSS	Engineering Operational Sequencing System
ESO	Educational Services Office
EWARP	Emergency Water-Activated Repair Patch
FFE	Fire-fighter's Ensemble
F/O	Fuel Oil
GM	Metacentric Height
GQ	General Quarters
HM	Hazardous Material
HMIS	Hazardous Material Information System
HMUG	Hazardous Material User's Guide
H_2S	Hydrogen Sulfide
IC	Interior Communication
J/W	Jacket Water
KT	Kiloton
L/O	Lube Oil

LOS	Local Operating Station
LVP	Low Voltage Protection
LVR	Low Voltage Release
LVRE	Low Voltage Release Effect
MBT	Manual Bus Transfer
MER	Main Engine Room
MLOC	Master Prelight Off Checklist
MPDE	Main Propulsion Diesel Engine
MRC	Maintenance Requirement Card
MSD	Marine Sanitation Device
MSDS	Material Safety Data Sheet
MT	Megaton
NAPP	Nerve Agent Pretreatment Pyridostigmine
NFTI	Naval Fire-fighter's Thermal Imager
NRTC	Nonresident Training Course
NSTM	Naval Ships' Technical Manual
NC	Normally Closed
NEURS	Navy Energy Usage Reporting System
NO	Normally Open
NOAP	Navy Oil Analysis Program
NPN	Negative Positive Negative
NWP	Naval Warfare Publication
OBA	Oxygen Breathing Apparatus
OL	Overload
OOD	Officer of the Deck
PASP	Primary Air Supply Pack
PBV	Pressure Build Up Valve
PECU	Portable Exothermic Cutting Unit
PHARS	Portable Hydraulic Access/Rescue System
PHEL	Physiological Heat Exposure Limit
PKP	Purple-K-Powder
PMS	Planned Maintenance System
QA	Quality Assurance
RASP	Reserve Air Supply Pack
RAST	Recovery Assist, Securing, and Traversing
R/O	Reverse Osmosis
SAR	Supplied Air Respirator
SCBA	Self-Contained Breathing Apparatus
SDK	Skin Decontamination Kit
SHML	Ship's Hazardous Material List
SIB	Ship's Information Book
SOPV	Solenoid-Operated Pilot Valve
SORM	Standard Organization and Regulations Manual
SSDG	Ship's Service Diesel Generator
SUS	Saybolt Universal Second
TACTAS	Tactical Towed Array Sonar
TLI	Tank Level Indicator
TMDER	Technical Manual Deficiency Evaluation Report
TNT	Trinitrotoluene
TREE	Transient Radiation Effects on Electronics
TXV	Thermostatic Expansion Valve
UJT	Unijunction Transistor
WBGT	Wet Bulb Globe Temperature
WIFCOM	Wire-Free Communication
WRV	Water Regulating Valve

APPENDIX III

DAMAGE CONTROL SYMBOLOGY

FIRE BOUNDARIES

Explanation	Example
FB (Identify all Primary and Secondary Boundaries) — Fire Boundaries Ordered	FB SPPS 2221 7407 0505
FB — Fire Boundaries Set	FB SPPS 2221 7407 0505 — EXAMPLE-Final Triangle for DC Plates

SMOKE BOUNDARIES

Explanation	Example
SB (Identify all Primary and Secondary Boundaries) — Smoke Boundaries Ordered	SB SPPS 2221 7407 0505
SB — Smoke Boundaries Set	SB SPPS 2221 7407 0505 — EXAMPLE-Final Triangle for DC Plates

DCfAIV01

FLOODING BOUNDARIES

Explanation

FLB — Flooding Boundaries Ordered

(Identify all Primary and Secondary Boundaries)

FLB — Flooding Boundaries Set

Example

FLB

SPPS
2221
7407
0505

FLB — EXAMPLE-Final Triangle for DC Plates

SPPS
2221
7407
0505

DCfAIV02

AFFF BILGE SPRINKLING SYSTEM

Explanation		Example	
AFFF	AFFF Station Manned	AFFF	
AFFF (Time On)	AFFF Station Activated/Time	AFFF 1340	
AFFF (Time Off)	AFFF Station Secured/Time	AFFF 1342 1340	EXAMPLE-Final Triangle for DC Plates

FIXED CO_2 SYSTEM

Explanation		Example	
CO_2	CO_2 System Manned	CO_2	
CO_2 (Time)	CO_2 System Activated/Time	CO_2 1340	
CO_2	CO_2 Effective	CO_2 1340	EXAMPLE-Final Triangle for DC Plates

DCfAIV03

FIXED HALON SYSTEM

Explanation		Example	
HALON / (Time)	Halon System Activated/Time	HALON / 1440	
(Time) / HALON	Halon System Released/Time	1441 / HALON / 1440	
HALON	Halon System Effective	1441 / HALON / 1440	EXAMPLE-Final Triangle for DC Plates

MAGAZINE SPRINKLER SYSTEM

Explanation		Example	
MSSM / (Group Number)	Magazine Sprinkler System Manned	MSSM / GP #6	
MSSM	Magazine Sprinkler System Activated	MSSM / GP #6	
MSSM	Magazine Sprinkler System Secured	MSSM / GP #6	Example-Final Triangle for DC Plates

DCfAIV04

FIRE (Class A, B,C, or D)

Explanation		Example	
A	Class ALPHA Fire Reported	A	
A	Class ALPHA Fire Contained	A	
A	Class ALPHA Fire Out	A	
A	Class ALPHA Fire Reflash Watch Set (Name Not Required)	A	
A	Class ALPHA Fire Overhauled	A	Example-Final Triangle for DC Plates

SMOKE

Explanation		Example	
S (Color , if known)	Smoke Reported	S Black	
(Equipment Used) S	Smoke Being Cleared (Method)	Ram Fan S Black	
S	Smoke Cleared	Ram Fan S Black	
O% S	Oxygen Test Safe	Ram Fan O 20.8% S Black	
+O E% S	Explosive Gas Test Safe	Ram Fan O 20.8% 2% LEL S Black	
+O E% -T S	Toxic Gas Test Safe	Ram Fan 20.8% 2% LEL T 5 PPM CO S Black	DCfAIV05

FLOODING

Explanation		Example	
FL (Depth)	Flooding Reported (Depth in IN or FT) (use of "or" not allowed)	FL 2 ft.	
(Equipment Used) FL (Depth)	Flooding Being Pumped	P100 FL ~~2 ft.~~ 6 in.	
FL	Flooding Dewatered	P100 FL ~~2 ft.~~ ~~6 in.~~ 0	EXAMPLE-Final Triangle for DC Plates
FS	Flooded Solid	FS	EXAMPLE-Final Symbol for DC Plates

FIREFIGHTING WATER

Explanation		Example	
FFW (Depth)	Firefighting Water Reported (Depth in IN or FT) (use of "or" not allowed)	FFW 4 in.	
(Equipment Used) FFW (Depth)	Firefighting Water Being Pumped (Equipment Used)	ESP FFW ~~4 in.~~ 2 in.	
FFW	Firefighting Water Dewatered	ESP FFW ~~4 in.~~ ~~2 in.~~ 0	EXAMPLE-Final Triangle for DC Plates

DCfAIV06

PROGRESSIVE FLOODINGS

Explanation

PFL
(Depth)

Progressive Flooding Reported
(Depth in IN or FT)
(use of "or" not allowed)

(Equipment Used)
PFL
(Depth)

Progressive Flooding Being Pumped
(Equipment Used)

PFL

Progressive Flooding Dewatered
Removed

Example

PFL
4 in.

ESP
PFL
~~4 in.~~
2 in.

ESP
PFL
~~4 in.~~
~~2 in.~~
0

EXAMPLE-Final Triangle for DC Plates

COMMUNICATIONS

Explanation

T
(Circuit Lost)

Communications Reported Lost on Circuit

(Alternate Circuit)
T

Communications Established Using
Alternate Circuit

T
(Circuit
Restored)

Communications Restored on Reported
Circuit

Example

T
2JZ

X40J
T
2JZ

X40J
T
2JZ

EXAMPLE-Final Triangle for DC Plates

DCfAIV07

CASUALTY POWER

EXPLANATION		EXAMPLE	
CP	Casualty Power Ordered	CP	
CP	Casualty Power Rigged	CP	
CP	Casualty Power Energized	CP	EXAMPLE-Final Triangle for DC Plates

SAGGING AND PANTING

EXPLANATION		EXAMPLE	
PANT (Location)	Panting Bulkhead (Location, Bulkhead)	PANT Frame 57	
(Shore Type) PANT	Panting Bulkhead Shoring in Progress (Type of Shoring)	I-Type PANT Frame 57	
PANT	Shoring Complete	I-Type PANT Frame 57	
PANT	Shoring Watch Set	I-Type PANT Frame 57	

DCfAIV08

ELECTRICAL

Explanation		Example	
E	Electrical Power Lost	E	
E	Electrical Power Ordered Isolated	E	
E	Electrical Power Isolated	E	
E	Electrical Power Restored	E	EXAMPLE-Final Triangle for DC Plates

ELECTRICAL DAMAGE

Explanation		Example	
NAED	No Apparent Electrical Damage	NAED	
ED	Electrical Damage Reported	ED	
ED	Electrical Damage Under Repair	ED	
ED	Electrical Damage Repaired	ED	EXAMPLE-Final Triangle for DC Plates

DCfAIV09

MECHANICAL

Explanation	Example
M — Mechanical Isolation Ordered	M
M — Mechanical Isolation Complete	M
M — Mechanical Isolation Restored	M — EXAMPLE-Final Triangle for DC Plates

COMPARTMENT DEMOLISHED

Explanation	Example
C/D — Compartment Demolished	C/D
C/D — Compartment Cleared	C/D — EXAMPLE-Final Triangle for DC Plates

DCfAIV10

SPRUNG FITTING

Explanation	Example
(Fitting Number) Sprung Fitting Reported	(Fitting Number)
Type of Repair — Repairs in Progress	K-Type — QAWTD 1-306-2
Sprung Fitting Repaired	QAWTD 1-306-2

HOT AND JAMMED DOORS, HATCHES, QAWTD, ECT.

Explanation	Example
J (Fitting Number) Jammed	J — QAWTD 1-220-2
J Unjammed	J — QAWTD 1-220-2 EXAMPLE-Final Triangle for DC Plates

DCfAIV11

PERSONNEL CASUALTY

Explanation	Example
P (Name or Billet, if known) — Personnel Casualty Reported	P SN DRUM
P — Corpman at Scene	P SN DRUM
P — Personnel Casualty Evacuated	P SN DRUM — EXAMPLE-Final Triangle for DC Plates

DCfAIV12

HOLE

Explanation

H
(SIZE)

Hole Reported
(Size in IN or FT)
(use of "or" not allowed)
(Pinpoint the Damage)

H

Hole Patching or
Plugging in Process

H

EXAMPLE-Final Triangle for DC Plates

Example

H
4 IN Frame 96, STBD
2 FT off deck

H
4 IN Frame 96, STBD
2 FT off deck

H
4 IN Frame 96, STBD
2 FT off deck

EXAMPLE-Final Triangle for DC Plates

RUPTURE

Explanation

R
(System)

Rupture Reported
(System, if known)
(Pinpoint the Damage)

(COVs)
R
(System)

Rupture Isolated

R

Rupture Bypassed
(How, Where)

R

Ruptured System Repaired
and COVs Opened

Example

R
FM
FM Frame 155 STBD, Overhead

FMCOV 1-145-3
FMCOV 1-165-5
R
FM
FM Frame 155 STBD, Overhead

FMCOV 1-145-3
FMCOV 1-165-5
R
FM
Jumpered Around
FM Frame 155 STBD, Overhead

FMCOV 1-145-3
FMCOV 1-165-5
R
FM
Jumpered Around
FM Frame 155 STBD, Overhead

EXAMPLE-Final Triangle for DC Plates

DCfAIV13

SPLIT SEAM OR CRACK

Explanation	Example
WW (size) Split Seam or Crack Reported (Size in IN or FT) (use of 'or" not allowed) (Pinpoint the Damage)	WW 4 IN by 2 FT Frame 96, STBD 2 FT Off Deck
WW Split Seam or Crack Repairs in Progress	WW 4 IN by 2 FT Frame 96, STBD 2 FT Off Deck
WW Split Seam or Crack Repairs Complete	WW 4 IN by 2 FT Frame 96, STBD 2 FT Off Deck EXAMPLE-Final Triangle for DC Plates

DCfAIV14

GUN

Explanation		Example	
G	Hot Gun Casualty Reported	G	
G (Time)	Cool-Down Started	G 1315	
G	Hot Gun Safe	G 1315	EXAMPLE-Final Triangle for DC Plates

MISSILE

Explanation		Example	
MSL	Missile Misfire	MSL	
MSL	Cool-Down Started or Jettison Ordered	MSL	
MSL	Jettisoned or Safe	MSL	EXAMPLE-Final Triangle for DC Plates

DCfAIV15

HIGH EXPLOSIVE

Explanation		Example	
HE	High Explosive Casualty Reported	HE	
HE	Recovery Started	HE	
HE	Area Safe	HE	EXAMPLE-Final Triangle for DC Plates

MAGAZINE

Explanation		Example	
MAG	Magazine High Temperature Reported	MAG (Fitting Number)	
(Method) MAG	Cool-Down Started (Method)	BOXFAN MAG	
MAG	Area Safe	BOXFAN MAG	DCfAIV16

CHEMICAL CONTAMINATION

Explanation		Example	
CHM	Chemical Contamination Reported (Agent, Location if known)	CHM MUSTARD/FR 96,STBD	
CHM	Chemical Contamination Isolated	CHM MUSTARD/FR 96,STBD	
CHM	Decontamination Complete	CHM MUSTARD/FR 96,STBD	EXAMPLE-Final Triangle for DC Plates

BIOLOGICAL CONTAMINATION

Explanation		Example	
BIO	Biological Contamination Reported (Agent, Location if known)	BIO RICIN/FR 96, STBD	
BIO	Biological Contamination Isolated	BIO RICIN/FR 96, STBD	
BIO	Decontamination Complete	BIO RICIN/FR 96, STBD	EXAMPLE-Final Triangle for DC Plates

DCfAIV17

RADIOLOGICAL (NUCLEAR) CONTAMINATION

Explanation		Example
NUC (Intensity) (Location)	Radiological Contamination Reported (Intensity if known)	NUC 180R/HR; FR102, STBD
NUC	Radiological Contamination Isolated	NUC 180R/HR; FR102, STBD
NUC	Decontamination Complete	NUC 180R/HR; FR102, STBD EXAMPLE-Final Triangle for DC Plates

TOXIC GAS SYMBOLOGY

Explanation		Example
TOX (Hazard if known)	Toxic gas or HAZMAT Spill Reported	TOX H_2S
TOX	Toxic gas or HAZMAT Spill Contained	TOX H_2S
TOX	Toxic gas or HAZMAT Spill Removed	TOX H_2S
TOX O	Oxygen Test	20.8 TOX H_2S
TOX O E	Explosive Gas Test	20.8 2% LEL TOX H_2S
TOX O E T	Toxic Gas Test	20.8 2% LEL 5 PPM H_2S H_2S

DCfAIV18

APPENDIX IV

REFERENCES USED TO DEVELOP THIS NONRESIDENT TRAINING COURSE

When consulting these references, keep in mind that they may have been revised to reflect new technology or revised methods, practices, or procedures. You therefore need to ensure that you are studying the latest references.

Damage Control Water Tight Closures Inspection, Maintenance and Repair Booklet, NAVSEA BOOKLET S9169-AW-DCB-010, Naval Sea Systems Command, Washington, DC, November 1992.

Hazardous Material (HAZMAT) User's Guide, OPNAV PUBLICATION P45-110, Office of the CNO, Washington, DC, March 1999.

Naval Ships' Technical Manual (NSTM), Volume 4, Chapter 079, "Damage Control - Compartment Testing and Inspection," Naval Sea Systems Command, Washington, DC, November 1998.

Naval Ships' Technical Manual (NSTM), Volume 1, Chapter 079, "Damage Control - Stability and Buoyancy," Naval Sea Systems Command, Washington, DC, November 1997.

Naval Ships' Technical Manual (NSTM), Volume 3, Chapter 079, "Engineering Casualty Control," Naval Sea Systems Command, Washington, DC, September 1999.

Naval Ships' Technical Manual (NSTM), Volume 3, Chapter 074, "Gas Free Engineering," Naval Sea Systems Command, Washington, DC, April 1998.

Naval Ships' Technical Manual (NSTM), Chapter 670, "General Stowage, Handling, and Disposal of Hazardous General Use Consumables," Naval Sea Systems Command, Washington, DC, May 1997.

Naval Ships' Technical Manual (NSTM), Chapter 070, "Nuclear Defense At Sea and Radiological Recovery of Ships After Nuclear Weapons Explosion," Naval Sea Systems Command, Washington, DC, July 1998.

Naval Ships' Technical Manual (NSTM), Chapter 077, "Personnel Protection Equipment," Naval Sea Systems Command, Washington, DC, March 1998.

Naval Ships' Technical Manual (NSTM), Chapter 505, "Piping Systems," Naval Sea Systems Command, Washington, DC, September 1999.

Naval Ships' Technical Manual (NSTM), Chapter 593, "Pollution Control," Naval Sea Systems Command, Washington, DC, September 1999.

Naval Ships' Technical Manual (NSTM), Volume 2, Chapter 079, "Practical Damage Control," Naval Sea Systems Command, Washington, DC, August 1998.

Naval Ships' Technical Manual (NSTM), Chapter 470, "Shipboard BW/CW Defense and Countermeasures," Naval Sea Systems Command, Washington, DC, August 1998.

Naval Ships' Technical Manual (NSTM), Volume 1, Chapter 555, "Surface Ship Fire Fighting," Naval Sea Systems Command, Washington, DC, September 1999.

Naval Ships' Technical Manual (NSTM), Chapter 096, "Weights and Stability," Naval Sea Systems Command, Washington, DC, August 1996.

Navy Occupational Safety and Health (NAVOSH) Program Manual for Forces Afloat, OPNAV INSTRUCTION 5100.19D, Office of the CNO, Washington, DC, November 2000.

Navy Warfare Publication (NWP), Surface Ship Survivability, NWP 3-20.31, Office of the Chief of Naval Operations, Washington, DC, 1996.

Planned Maintenance System, OPNAVINST 4790.4, Office of the CNO, Washington, DC, November 1994.

Quality Assurance Program, CINCLANTFLT/CINCPACFLTINST 4790.3, December 2000.

Standard Organization and Regulations of the U.S. Navy, OPNAVINST 3120.32C, Office of the CNO, Washington, DC, April 1994.

U.S. Navy CBR Defense and U.S. Marine Corps NBC Defense Handbook, OPNAV P-86-1-95, Office of the CNO, Washington, DC, April 1995.

INDEX

A

Accessman, 2-10
Administrative organization, 2-1
Air blast injuries, 10-9
Airburst, 10-2
Air test, 3-23
Analysis of stability, 12-11
AN/PDR-27, 11-2
AN/PDR-43, 11-3
AN/PDR-65, 11-3
Antiflash clothing, 5-15
Aqueous film-forming foam (AFFF), 4-6
    AFFF fire extinguisher, portable, 5-2
    AFFF, installed system, 6-4
    AFFF sprinkler system, 6-10
    AFFF station operator, 2-10
    AFFF valves, 6-7 to 6-9
Aqueous potassium carbonate (APC), 6-17
Atmospheric testing, 7-14
Atom, components of, 10-1
At-sea fire party, 2-7
Attack team considerations, 7-7
Auxiliary circuits, 2-16

B

Balanced-pressure proportioner, 6-9
Base surge, 10-8
Battle damage repair, 8-1
Battle dressing stations, 2-7
Battle lanterns, 5-22
Battle organization, 2-1
Bills and directives, 1-11
Biological effects of nuclear radiation, 10-9
Biological warfare (BW) agents, 9-19
    biological operations, 9-19
    detection of, 9-21
    dissemination of, 9-21
    effects of, 9-21
Blister agents, 9-7
Blood agents, 9-7
Blowers, portable, 5-22
Booklet of inclining experiment data, 12-11
Boundaryman, 2-10
Buoyancy, 12-5 and 12-6

C

C2 canister, 9-3
Cables, watertight, 3-21
Cable identification, 8-22
Carbon dioxide (CO_2) equipment, 4-4
    CO_2 fire extinguisher, portable, 5-3
    CO_2 flooding system, 6-13
    CO_2 hose-and-reel system, 6-13
    CO_2 transfer unit, 5-4
    Carbon monoxide (CO), 4-4
    CASCOR, 1-11
    CASREP, 1-11
Casualty power runs, 8-20
Casualty power system, 8-20
Casualty power system, portable, 8-21
CB protective overgarment, 9-4
CB warfare protective equipment, 9-1
CBR defense, 9-1
CBR Defense Bill, 9-28
Center of buoyancy, 12-7
Center of gravity, 12-3
Checking equipment, 7-10
Chemical warfare defense, 9-1
    chemical agent detection capabilities, 9-10
    chemical agent detection paper, 9-11
    chemical agent detector kit, 9-13
    chemical agent point detector system (capds), 9-17
    chemical agents, 9-5
    chemical contamination, monitoring of, 9-18
    chemical decontamination, 9-25
    chemical operations, 9-5
    chemical protective garment, advanced (acpg), 9-4
    chemical warfare directional detector (cwdd), an/kas-1, 9-15
    chemical warfare directional detector (cwdd), choking agents, 9-8
Closure system, 9-22
Collective protection system (CPS), 11-15
Combustion, rate of, 4-5
Command duty officer, 1-6
Communications, shipboard, 2-16
Compartment air test, 3-22
Compartment checkoff lists (CCOL), 1-11, 3-19 and 3-20
Compartment remanning, 7-16
Compartment lettering, 3-6
Compartment numbering, 3-4
Compartmentation, 3-1
Contamination control area (CCA), 9-26
Contamination markers, 9-18
Countermeasures at sea, 9-22
Countermeasures washdown (CMWD) system, 9-22
CP-95A/PD, 11-4
Cross curves of stability, 12-14

D

Damage control, 1-1
    damage control administration, 1-10
    damage control assistant, 1-7
    damage control, basic objectives of, 1-1
    damage control book, 1-3
    damage control central, 2-2
    damage control closure log, 3-21
    damage control communications, 2-11
    damage control doctrine, 13-3
    damage control equipment, 8-1 and 8-2
    damage control kits, 8-2
    damage control messages, 2-17 and Appendix III
    damage control organization, communication, and information, 2-1
    damage control petty officer, 1-9
    damage control responsibilities, 1-1
    damage control supervisor, 1-8
    damage controlman rating, 1-1
Damaged systems, 7-9
Decks, 3-1 to 3-4
Deck numbering system, 3-3
Decontamination, 11-14
    decontamination, personnel, 9-23 and 11-14
    decontamination process, 11-14
    decontamination station, 9-24 and 11-15
Density, 12-3
Department heads, 1-6
Desmoking, 7-14 and 7-15
Dewatering, 7-15
Dewatering equipment, 5-1
Diagrams and blueprints, 2-19
Displacement, 12-6
Dissemination of BW agents, 9-6
Division officer, 1-9
Doors, watertight, 3-7
Dosimeters, 11-3
DT-60/PD, 11-4

E

Eductors, 5-19 to 5-21
Electrician, 2-10
Electromagnetic pulse (EMP), 10-7
Emergency access equipment, 8-17
Emergency circuits, 2-17
Emergency escape breathing device (EEBD), 7-8
Emergency overboard discharge connetions, 5-21
Engineer officer, 1-6
EWARP, 8-20
Executive officer, 1-5
Exothermic torch, 2-10
Extinguishing agents, 4-5 and 4-6

F

Fallout, 10-7
Fans, portable, 5-22
Fighting the fire, 7-8
Fire and smoke boundaries, 7-9
    Fire attack, 7-12 and 7-13
    Fire, classes of, 4-2, 7-1 and 7-2
    Fire, dynamics of, 7-3
    Fire, effects of, 4-3
    Fire growth, 7-4
Fire extinguishers, portable, 5-1
Fire extinguishment, 7-1
Fire-fighter's ensemble, 5-14 and 7-11
Fire-fighting fundamentals, 4-1
Fire-fighting systems, 6-1
Fire-fighting tactics, 7-1
Fire marshal, 1-9
Fire spread, 7-5
Fire tactics, 7-1
Fire triangle, 4-1
Firemain systems, types of, 6-1
Fittings, classification of, 3-13
Flashlights/headlamps, 5-23
Force, moments of, 12-3 and 12-4
Frame numbering, 3-5
Freeboard, 12-7
Free communication effect, 12-18
Free surface effect, 12-15 and 12-16

G

Gases, 4-3
General quarters, 7-7

H

Halon systems, 4-6, and 6-14 to 6-16
Hangfires and overhaul, 7-14
Hatches, 3-8
Heat, human tolerance to, 7-6
Heat stress, 7-13
Heat stroke, 7-13
High-altitude burst, 10-3
Holes in the hull, 8-3
Hose handling, 7-12
Hose team, briefing, 7-10
Hose team movements, 7-12
Hull repair, 8-3
Hull, structure of, 3-1 to 3-4
Hull terms, 3-2
Hydrogen sulfide, 4-4

I

In-port activities, 7-7
IM-9/PD, 11-4
Incapacitating agents, 9-9
Incendiaries, 9-9
Inclining experiment, 12-10
Inclining moments, 12-8
Indirect attack, 7-11
Information, sources for training, 13-1
Initial nuclear radiation, 10-7
Injuries from underwater shock, 10-10
Injuries, nuclear radiation, 10-9 and 10-10
In-port fire party, 2-8
Inspection of doorframes, 3-9 and 3-10
Investigation, 7-16
Investigator, 2-9
Isometric damage control diagram, 2-20

J

Jubilee pipe patch, 8-19

L

Lanterns, portable, 5-23
Longitudinal stability, 12-19
Loose water, 12-15

M

M256A1 chemical agent detector kit, 9-12
M291 skin decontamination kit (SDK), 9-23
M8 detector paper, 9-11
M9 detector paper, 9-11
Magazine sprinkler systems, 6-2
Mask, protective, 9-2
Material condition of readiness, 3-13
MCU-2A/P protective mask, 9-4
Message blanks, 2-16 to 2-18, and Appendix III
Metacenter, 12-9
Metacentric height, 12-10
Metal shores, 8-9
Microorganisms, 9-20
Moments, 12-4

N

Navy schools, 1-2
Nerve agents, 9-6
NFTI, 7-10
Nozzleman, 2-9
Nuclear bursts, effects of, 10-5
Nuclear bursts, types of, 10-2
Nuclear radiation, 10-6

O

Officer of the deck, 1-5
On-scene leader, 2-9
Oxygen, 4-4 and 4-5
Oxygen breathing apparatus (OBA), 6-2 to 6-13

P

Patch, EWARP, 8-19
Patch, Jubilee, 8-19
Patch, soft, 8-19
Patches, 8-6
PECU, 8-17
Personnel injuries, 10-8
Pests, 9-21
PHARS, 8-17
Phone talker, 2-10
Physics, 12-2
Pipe patching, 8-18
PKP, 4-6 and 5-1
Plugging and patching holes, 8-5
Plugging and patching materials, 8-3
Plugman, 2-10
Portable emergency pumps, 5-16
Portable fans and blowers, 5-22
Portable fire extinguishers, 5-1
PP-4276A/PD, 11-5
PQS, 1-4
Preparing to enter a space, 7-9
Primary air supply pack (PASP), 5-14
Primary circuits, 2-15 to 2-16
Professional development, 1-2 and 1-7
Protective equipment, 5-5
Protective mask, 9-1
Protective shielding, 11-13
Pump, P-100 portable, 5-16 to 5-18
Pump, portable electrical, 5-18
Pump, submersible, 5-19

Q

Quantab chloride titrator, 5-36 to 5-37

R

RADIAC equipment, calibration of, 11-5
RADIAC instruments, 11-1
Radiation sickness, 10-11
Radioactive water pool, 10-8
Radiological defense and recovery, 11-1
Radiological effects, 10-1
Radiological exposure control, 11-13
Radiological surveys, 11-6
Ramfans, portable, 5-22
Records, 1-11
Reflash prevention, 7-14
Reflash watch, 7-14
Repair parties and teams, 2-3 to 2-7 and 7-8
Repair party manual, 1-3
Reports, 1-11 and 1-12
Reserve air supply pack (RASP), 5-14
Responsibilities of key personnel, 1-5
Righting arm and moments, 12-13

S

Safety, 3-12
SACPS, 9-27
Schools, 1-2
Self-contained breathing apparatus (SCBA), 5-12
Shelters, 11-14
Ship information book (SIB), 1-4
Sholes, 8-9
Shores, measuring and cutting, 8-10
Shoring, 8-8 to 8-15
Shoring batten, 8-11
Shoring kit, 8-10
Shoring material, 8-8
Shoring rules, 8-14
Sources of information, 1-2 to 1-4
Stability, analysis of, 12-11
Stability and buoyancy, 12-1
Stability curves, 12-12 and 12-13
Strongbacks, 8-9
Supplied air respirator (SAR), 5-13
Surface burst, 10-3
Survey meters, 11-2
Surveys, 11-6
Symbology, damage control, 2-21 and Appendix III

T

Team leader, 2-9
Tear agents, 9-11
Telephone circuits, 2-12 to 2-14
Telephone circuits, battle, 2-12
Telephones, ship's service, 2-14
Thermal radiation, 10-6
Total protection (TP) zones, 9-27 and 11-15
Toxins, 9-9
Training, damage control, 13-1
Trigonometry, 12-1

U

Underground burst, 10-4
Underwater burst, 10-3
Underwater repairs, 8-4
Underwater shock, 10-5

V

Vectors of disease, 9-20
Ventilation, 3-24
Visual inspection, 3-22
Volume, 12-3
Vomiting agents, 9-8

W

Water, 4-6
Watertight closures, 3-7
Watertight door parts, 3-11
Watertight integrity, 3-7
Watertight integrity, checking, 3-22
Weathering, 9-23
Wedges, 8-9
Weight, 12-3

ASSIGNMENT 1

Textbook Assignment: "Damage Controlman Rating" and "Damage Control Organization, Communication, and Information," chapters 1 and 2.

Learning Objective: Recall the duties and responsibilities of the Damage Controlman rating.

1-1. Which of the following responsibilities is NOT applicable to a Damage Controlman?

1. Preserving watertight integrity
2. Instructing damage control parties
3. Serving as the senior member of the underway watch team
4. Conducting CBR defense

1-2. Organization and teamwork are the keys to successful damage control.

1. True
2. False

1-3. Which of the following goals is NOT applicable to damage control?

1. Limiting the spread of a fire and caring for wounded personnel
2. Preserving watertight integrity and ship stability maneuverability
3. Controlling list and trim and protecting against the effects of chemical and biological agents
4. Maintaining adequate food and fuel supplies

1-4. Which of the following actions is NOT a basic objective of shipboard damage control?

1. Minimizing and localizing damage
2. Accomplishing emergency repairs and restorations as quickly as possible
3. Taking all practicable preliminary measures before damage occurs
4. Maintaining auxiliary machinery and piping systems

1-5. When repairing damage control equipment, you should always refer to the

1. PM guidebook
2. manufacturer's technical manual
3. appropriate *Naval Ships' Technical Manual (NSTM)*
4. shop instructions

1-6. Damage control books are furnished to some selected small ships and to all naval ships that exceed what length, in feet?

1. 200
2. 210
3. 215
4. 220

1-7. Small ships that are not issued damage control books may

1. order them from NAVSEA
2. use copies from a larger ship
3. develop their own
4. purchase copies from NAVSUP

1-8. Which of the following subjects is NOT covered by damage control books?

1. Damage control systems and general information
2. Ship's compartmentation and piping systems
3. Ship's electrical and ventilation systems
4. Ship's radar and missile systems

1-9. What command maintains a record of all damage control books distributed?

1. OPNAV
2. CINCPAC
3. NAVSEA
4. SPAWAR

1-10. What officer is normally the custodian of the damage control books?

1. Officer of the Deck (OOD)
2. Executive officer
3. Engineer officer
4. Administration officer

1-11. A standard repair party manual does NOT include which of the following information?

1. The methods of investigating damage and the means for reporting the damage
2. A chain of command diagram
3. A secondary DCC description
4. The deck plans of the ship

1-12. Type commanders are responsible for the preparation of standard repair party manuals for ships under their authority.

1. True
2. False

1-13. Charts and detailed listings of fittings are not required in the repair party manual. This information should be available in which of the following manuals?

1. *NSTM*
2. *NWP* 3-20.31
3. *3-M Manual*
4. NAVSEA damage control book

1-14. When a ship is built for the Navy, the *Ship Information Book* is prepared by

1. Naval Sea Systems Command (NAVSEA)
2. the builder
3. the Commander Fleet Activities (COMFLEACT)
4. the Bureau of Inspection and Survey

Learning Objective: Recall the damage control responsibilities of key personnel in the chain of command.

1-15. What chapter of the *U.S. Navy Regulations* describes the responsibilities of the commanding officer?

1. 1
2. 5
3. 7
4. 4

1-16. What person keeps the commander advised of the status of the ship's damage control readiness?

1. Command duty officer in port
2. OOD
3. Engineer officer
4. Executive officer

1-17. What person is the senior member of the underway watch team?

1. OOD
2. Engineer officer
3. Executive officer
4. Damage Control Assistant (DCA)

1-18. The command duty officer in port is generally NOT responsible for which of the following actions?

1 Lecturing the commanding officer on specific rules and regulations
2. Advising the OOD in matters concerning the general duties and safety of the ship
3. Keeping informed of the ship's position and the status of the engineering plant
4. Relieving the OOD, when required for the safety of the ship, and notifying the commanding officer when such action is taken

1-19. Department heads do NOT have which of the following responsibilities?

1. To ensure optimum material conditions of readiness with the department as prescribed by compartment checkoff lists (CCOLs) provided by the DCA
2. To operate and maintain the main propulsion plant, auxiliary machinery, and piping systems
3. To require that damage control equipment and fittings be maintained in their proper locations and in operating order
4. To provide personnel for damage control, repair, fire, and rescue parties, as required by the ship's organization bills

1-20. When conducting CBR defense procedures, the engineer officer acts as the technical assistant to what officer?

1. Command duty officer
2. OOD
3. Executive officer
4. DCA

1-21. An engineer officer does NOT have which of the following duties?

1. Organizing repair party 5 according to the ship's Battle Bill
2. Supervising the training of repair party 5
3. Assigning appropriate engineering ratings to other repair parties according to the ship's Battle Bill
4. Maintaining a written damage control log

1-22. What person is responsible for submitting to the planning board a schedule of damage control training requirements for the ship's crew?

1. Safety officer
2. OOD
3. Executive officer
4. DCA

1-23. What person is responsible for maintaining a written damage control log and supervising the maintenance of the ship's damage control closure log?

1. Engineer officer
2. Damage control supervisor
3. Fire marshal
4. DCA

1-24. The estimated time a fitting is open should not exceed what period of time, in hours?

1. 96
2. 72
3. 48
4. 24

1-25. The fire marshal does NOT have which of the following duties and responsibilities?

1. Maintaining the damage control log
2. Conducting daily inspections of the ship
3. Submitting reports of fire hazards to the DCA and executive officer
4. Serving as an assistant to the engineer officer

1-26. What person is responsible for supervising the setting of specified damage control material conditions?

1. Division damage control petty officer
2. DCA
3. OOD
4. Executive officer

1-27. What person is responsible for weighing CO_2 bottles and ensuring damage control and fire-fighting equipment is properly stenciled or identified by proper color code?

1. Division officer
2. Damage control petty officer
3. DCA
4. Fire marshal

1-28. As a Damage Controlman, your first assignment aboard ship will normally be to serve as a

1. DCA
2. repair locker supervisor
3. member of an emergency damage control team
4. damage control zone inspector

Learning Objective: Recall the various damage control administrative programs, directives, and reports.

1-29. The ship's Battle Bill is tailored to a specific ship for battle organization.

1. True
2. False

1-30. What person is responsible for the Rescue and Assistance Bill?

1. Executive officer
2. Engineer officer
3. DCA
4. Division officer

1-31. What person is responsible for the Cold Weather Bill?

1. DCA
2. Executive officer
3. Division officer
4. Damage control petty officer

1-32. What person is responsible for the Toxic Gas Bill and the Darken Ship Bill?

1. DCA
2. Executive officer
3. Division officer
4. Damage control petty officer

1-33. What person is responsible for maintaining the master CCOL?

1. Damage control petty officer
2. Executive officer
3. Division officer
4. DCA

1-34. A CCOL is maintained in each compartment of the ship and provides information on all fittings within the compartment.

1. True
2. False

1-35. A CASREP is submitted to report the occurrence of an equipment casualty that cannot be corrected within how many hours?

1. 99
2. 96
3. 72
4. 48

1-36. What type of report is submitted when equipment reported on a CASREP is returned to operational condition?

1. Safe Wind
2. Updated CASREP
3. CASCOR
4. SITREP

1-37. What program requires the testing of damage control equipment and preparation of inspection reports?

1. Ship's Maintenance Program
2. Bureau of Inspection and Survey Maintenance Program
3. Maintenance and Material Management (3-M) Program
4. Critical Maintenance Program

1-38. The QA Program is fully presented in what instruction?

1. CINCLANTFLT/CINCPACFLT INST 4790
2. CINCLANTFLT/CINCPACFLT INST 4630
3. CINCLANTFLT/CINCPACFLT INST 4550
4. CINCLANTFLT/CINCPACFLT INST 4410

1-39. What are the two types of audits used by the ship's force?

1. Random and Specific
2. Comprehensive and Full
3. Vertical and Horizontal
4. Parallel and Summary

1-40. What officer is responsible for monitoring the Hearing Conservation Program and the Heat Stress Program?

1. Engineer
2. Safety
3. Administration
4. Executive

1-41. Heat stress is any combination of air temperature, thermal radiation, humidity, airflow, and workload that stresses the body as it attempts to regulate body temperature.

1. True
2. False

Learning Objective: Recall the elements of the damage control organization and the duties and responsibilities of members of repair parties.

1-42. The two elements of the damage control organization are the damage control administrative organization and the damage control battle organization.

1. True
2. False

1-43. The damage control administrative organization is part of what department?

1. Supply
2. Engineering
3. Operations
4. Deck

1-44. DCC is a part of the damage control administrative organization.

1. True
2. False

1-45. Personnel assigned to DCC are under the supervision of what person?

1. Executive officer
2. Commanding officer
3. OOD
4. DCA

1-46. The main deck repair party is designated as what repair party?

1. Repair 1
2. Repair 2
3. Repair 3
4. Repair 4

1-47. The forward repair party is made up of personnel from the deck and engineering departments and is designated as what repair party?

1. Repair 1
2. Repair 2
3. Repair 3
4. Repair 4

1-48. What repair party is primarily made up of personnel from the air and engineering departments?

1. Repair 1
2. Repair 2
3. Repair 7
4. Repair 8

1-49. The ordnance disposal team is administered as a unit of the ship's

1. air department
2. weapon's department
3. supply department
4. engineering department

1-50. Obtaining samples of biological agents and the identification of chemical agents are two of the general responsibilities of the

1. damage control repair parties
2. DCA
3. damage control petty officer
4. ordnance disposal teams

1-51. What repair party is responsible for maintaining the ship's propulsion equipment?

1. Repair 8
2. Repair 7
3. Repair 6
4. Repair 5

1-52. Most ships have a minimum of how many battle dressing stations equipped for emergency handling of personnel battle casualties?

1. Six
2. Two
3. Three
4. Four

1-53. Most surface ships have a special fast-response party known as the at-sea party and is sometimes called the

1. "911 Squad"
2. "Mercury Squad"
3. "Dalmatian Squad"
4. "Flying Squad"

1-54. If the fire is beyond rapid-response team capabilities, the fire marshal will turn duties over to the scene leader.

1. True
2. False

1-55. The team leader directs the efforts of attack teams while using the

1. Naval Fire-fighter's Thermal Unit (NFTU)
2. Naval Fire-fighter's Thermal Imager (NFTI)
3. Naval Fire-fighter's Thermal Display (NTFD)
4. Naval Fire-fighter's Thermal Finder (NFTF)

1-56. What person is in charge of the fire party at the scene of the fire?

1. On-scene leader
2. Nozzleman
3. Plugman
4. Accessman

1-57. What person provides forcible-entry tools and atmosphere-testing devices at the scene of a fire in a compartment?

1. Nozzleman
2. Boundaryman
3. Accessman
4. Electrician

Learning Objective: Recall the fundamentals of shipboard damage control communications.

1-58. What circuit is the damage and stability control circuit that provides vital communication between critical stations?

1. 1JZ
2. 2JZ
3. 3JZ
4. 4JZ

1-59. Circuit JL is used by surface and sky lookouts.

1. True
2. False

1-60. What circuit is only used to announce vital information of interest to all of the ship's company?

1. 9AF
2. 1MC
3. 3JV
4. 4MC

1-61. The ship's service telephones should not be depended upon for damage control communications because they can be knocked out of commission easily.

1. True
2. False

IN ANSWERING QUESTIONS 1-62 THROUGH 1-67, REFER TO FIGURE 1A.

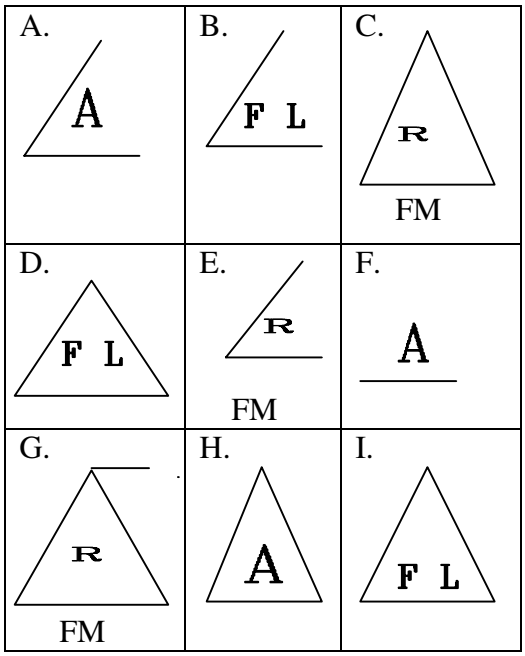

Figure 1A

1-62. Which symbol identifies a class ALPHA fire contained?

1. H
2. F
3. B
4. A

1-63. Which symbol identifies a ruptured firemain repaired and COV opened?

1. C
2. D
3. E
4. G

1-64. Which symbol identifies a ruptured firemain bypassed?

1. E
2. G
3. C
4. B

1-65. Which symbol identifies flooding that has been dewatered?

1 B
2. D
3. E
4. F

1-66. Which symbol identifies a class ALPHA fire out?

1. A
2. D
3. F
4. H

1-67. What symbol identifies flooding being pumped?

1. I
2. E
3. D
4. B

1-68. What is the standard damage control symbology for a watertight hatch?

1. WH
2. WTH
3. HWT
4. HW

1-69. To ensure maintenance of communications control, the sequence of command is provided in the *Ship's Repair Party Manual* and is posted in

1. each compartment
2. damage control central only
3. all passageways
4. each repair locker

1-70. The initial report from a repair party should contain the location and nature of the damage. Subsequent reports should contain information of the extent of the damage, the measures being taken to correct the damage, and any assistance required.

1. True
2. False

Learning Objective: Recall the purposes and use of damage control diagrams and blueprints.

1-71. The Ship's Drawing Index (SDI) is maintained in what office?

1. DCC (blueprint cabinet)
2. Operations office
3. Supply office
4. Engineering department office (log room)

1-72. Isometric diagrams are three-dimensional and are developed and provided under strict requirements set forth by what command?

1. NAVSURPAC
2. NAVSEA
3. NAVSUP
4. BIS

1-73. A better understanding of ship's plans and blueprints can be gained by completing the Navy's nonresident training course (NRTC) *Blueprint Reading and Sketching*, NAVEDTRA 12014.

1. True
2. False

1-74. On the isometric damage control diagrams, each deck is shown as a separate level.

1. True
2. False

1-75. Drawings kept onboard your ship are identified in the SDI by what symbol?

1. Plus sign
2. Asterisk
3. Em-dash
4. Capital letter *X*

ASSIGNMENT 2

Textbook Assignment: “Ship Compartmentation and Watertight Integrity" and "Fire-Fighting Fundamentals,” chapters 3 and 4.

Learning Objective: Recall the definitions of terms used to define the structure of the hull of a ship and the numbering systems used to identify the different compartments of a ship.

2-1. Most structural members of the hull of a ship are either directly or indirectly attached to what structure?

1. Gunwale
2. Keel
3. A-strake
4. Bulwark

2-2. What structures provide extra transverse stiffening and partition the hull into independent watertight sections?

1. Watertight stanchions
2. Watertight brackets
3. Watertight bulkheads
4. Watertight rider plates

2-3. On all ships except aircraft carriers, the uppermost complete deck is identified as the main deck. What deck is identified as the main deck on an aircraft carrier?

1. Gun deck
2. Forecastle
3. Hangar deck
4. Flight deck

2-4. The first complete deck below the main deck is identified as what deck?

1. First
2. Second
3. Third
4. Fourth

2-5. The boat deck is what level above the main deck?

1. 01
2. 02
3. 03
4. 04

Learning Objective: Recall compartment number designations for ships built after March 1949.

2-6. Compartment identifiers have a four-part number separated by hyphens; the four parts indicate: (1) the deck upon which the compartment is located, (2) the fore-and-aft locations of the compartment, (3) the position of the compartment relative to the ship's centerline, and (4) the compartment use.

1. True
2. False

2-7. All frames forward of the forward perpendicular are identified by a capital letter, starting with *A*. The frames aft of the aft perpendicular are identified with double capital letters, starting with

1. AA
2. BB
3. MM
4. ZZ

2-8. How are compartments completely to starboard on a ship identified?

1. By assigned even numbers
2. By assigned odd numbers
3. By assigned even numbers plus the letter *S*
4. By assigned odd numbers plus the letter *R*

2-9. On dry- and liquid-cargo ships, how is the primary use of a cargo space identified to differentiate it from spaces containing the same commodity for use by the ship?

1. A letter and a number is used
2. A double letter is used
3. A double letter and a number is used
4. A double letter plus a capital letter *C* is used

Learning Objective: Recall different types of watertight closures and the inspection procedures for the closures.

2-10. Which of the following is NOT a watertight closure or fitting?

1. Watertight doors
2. Raised watertight hatches
3. Raised watertight hatches with scuttles
4. Watertight bulkheads

2-11. What type of watertight closure is usually found in low traffic areas that do not require either rapid access or egress?

1. Watertight doors
2. Raised watertight hatches
3. Raised watertight hatches with scuttles
4. Quick-acting watertight doors

2-12. When inspecting watertight closures, you must comply with the instructions in *Navy Safety Precautions for Forces Afloat*, OPNAVINST 5100 series.

1. True
2. False

2-13. The maximum acceptable warpage of a doorframe is what fraction of an inch?

1. 1/8
2. 1/4
3. 1/2
4. 3/4

Learning Objective: Recall the requirements for the three material conditions of readiness.

2-14. The term *material condition of readiness* refers to the degree of access and system closure in effect on a ship

1. at any given time
2. when in port
3. during wartime
4. during naval operations

2-15. What are the names of the three material conditions of readiness?

1. ALPHA, BRAVO, and CHARLIE
2. RED, WHITE, and BLUE
3. X-RAY, YOKE, and ZEBRA
4. MCON 1, MCON 2, and MCON 3

2-16. What material condition of readiness is set to isolate and control fires and flooding when the ship is not at GQ?

1. RED
2. TWO
3. CHARLIE
4. ZEBRA

2-17. What person grants permission to open and close fittings in their assigned areas when the ship is at general quarters?

1. Executive officer
2. Damage control assistant (DCA)
3. Repair party officer
4. OOD

2-18. CIRCLE X-RAY fittings are marked with a black X inside of a black circle. These modified closures are secured during what conditions?

1. X-RAY, YOKE, and ZEBRA
2. X-RAY and YOKE only
3. YOKE and ZEBRA only
4. X-RAY and ZEBRA only

2-19. The access doors to missile handling and checkout area compartments are marked with what material condition of readiness?

1. X-RAY
2. YOKE
3. ZEBRA
4. CIRCLE X-RAY

2-20. Which of the following compartment hatches are marked with a CIRCLE YOKE identifier?

1. Air-conditioning machinery room
2. Scuttles for passing ammunition
3. Air compressor room
4. Steering gear power and ram room

2-21. ZEBRA fittings are marked with a red Z. Proper authorization to open fittings with this classification is required when the ship is at condition X-RAY.

1. True
2. False

Learning Objective: Recall the purpose of the CCOL.

2-22. Compartment Checkoff Lists (CCOLs) provide an itemized listing of all classified fittings and closures used in damage control to set the specified

1. material condition of readiness
2. defense conditions
3. electronic countermeasures
4. protective measures

2-23. Guidelines listed in what manual are used to check and update CCOLs?

1. *NSTM*, chapter 079, volume 1
2. *NSTM,* chapter 079, volume 2
3. *NSTM,* chapter 079, volume 3
4. *NSTM,* chapter 079, volume 4

2-24. When a compartment has more than one entrance, duplicate CCOLs clearly labeled DUPLICATE must be posted at each entrance.

1. True
2. False

2-25. What person maintains a master copy of every CCOL on file in DCC?

1. Division officer
2. Repair team leader
3. DCA
4. OOD

Learning Objective: Recall the purpose of the damage control closure log and how to use it correctly.

2-26. During general quarters (GQ), who controls the opening and closing of all fittings in their assigned areas and keeps DCC informed so the ship's DC closure log can be kept up-to-date?

1. DCAs
2. Personnel in charge of repair lockers
3. Repair party officers
4. Division officers

2-27. What is the maximum time a closure or fitting may be logged open?

1. 48 hours
2. 36 hours
3. 30 hours
4. 24 hours

2-28. A common place for leakage is around dog spindles where the spindles pass

1. over heaters
2. through doorframes
3. through air-conditioned compartments
4. under vents

2-29. For a door or hatch to be watertight when it is dogged, the knife-edge or bearing surface of the closure must be centered on the gasket.

1. True
2. False

2-30. When opening a closure, you can protect yourself by standing on the opposite side from the hinges and loosening the dogs nearest the hinge first.

1. True
2. False

2-31. Watertight scuttles have a safety device known as a

1. safety catch
2. retaining ring
3. bracing link assembly
4. hinge pin

2-32. Most injuries to personnel connected with closures are the result of faulty design of the closure.

1. True
2. False

Learning Objective: Recall the procedures for checking watertight integrity.

2-33. Guidelines for compartment tests and inspections are provided in *NSTM*, chapter 079,

1. volume 1, "Damage Control"
2. volume 2, "Damage Control,"
3. volume 3, "Damage Control,"
4. volume 4, "Damage Control,"

2-34. Often you can discover holes or cracks in watertight bulkheads and decks by conducting a thorough visual inspection.

1. True
2. False

2-35. The Schedule of Watertight Integrity Tests and Inspections is issued by NAVSEA for each ship. This schedule contains information on each watertight compartment and the type of test used to determine the

1. type of OBAs used in the area
2. air quality in the compartment
3. tightness of the compartment
4. correct lubricant to use on doors

Learning Objective: Recall the components of the "fire triangle."

2-36. The fire triangle does NOT include which of the following components?

1. Fuel
2. Halogens
3. Heat
4. Oxygen

2-37. When a fire is detected aboard ship, you must report it immediately to the

1. LCPO
2. Executive officer
3. OOD
4. DCA

2-38. Details on fire extinguishing are contained in *NSTM*, chapter

1. 440, volume 1
2. 455, volume 1
3. 505, volume 1
4. 555, volume 1

2-39. Fire, also called combustion, can be extinguished by eliminating one side of the fire triangle.

1. True
2. False

2-40. Combustion involves a rapid chemical reaction by which oxygen combines with a burning substance. This chemical reaction is known as

1. liquefaction
2. titration
3. oxidation
4. reduction

2-41. In some types of materials slow oxidation can turn into fast oxidation resulting in a fire. This phenomenon is known as

1. titration
2. hydration
3. accelerated kinetics
4. spontaneous combustion

2-42. What is the definition of the fire point of a liquid fuel?

1. The lowest temperature at which the fuel gives off vapors that will burn when a flame is applied
2. The temperature that is one degree below that needed for ignition
3. The temperature at which the fuel will continue to burn after it is ignited
4. The highest temperature at which the fuel gives off vapors that explodes spontaneously

2-43. The temperature at which spontaneous combustion of a fuel occurs is known as the

1. fire point
2. flash point
3. explosive point
4. auto-ignition point

2-44. What is the definition of the flash point of a flammable substance?

1. The lowest temperature at which the fuel gives off vapors that will burn when a flame or spark is applied
2. The lowest temperature to which the fuel must be heated to give off vapors that will burn without the application of a spark or flame
3. The temperature at which the fuel will continue to burn after it is ignited
4. The highest temperature at which the fuel gives off vapors that explodes spontaneously

2-45. A minimum concentration of what percentage of oxygen in the air is needed to sustain flaming combustion?

1. 10
2. 15
3. 20
4. 25

2-46. What percentage of air is normally oxygen?

1. 10%
2. 21%
3. 33%
4. 78%

Learning Objective: Recall the different classifications of fires and identify the fire extinguishers used to extinguish each type of fire.

2-47. Fires are classified according to the

1. location of the fire
2. color of the fire
3. temperature of the air around the fire
4. combustible or fuel involved

2-48. A magnesium fire can be extinguished by covering it with a large volume of

1. PKP
2. soapy water
3. dry sand
4. gasoline

2-49. What type of extinguisher is primarily used to extinguish a class ALPHA fire?

1. AFFF
2. Large volumes of sand
3. Water
4. PKP

IN ANSWERING QUESTIONS 2-50 THROUGH 2-53, REFER TO FIGURE 2A AND SELECT FROM COLUMN B THE FIRE CLASSIFICATION FOR THE COMBUSTIBLE MATERIAL IN COLUMN A.

A. COMBUSTIBLE MATERIALS	B. CLASS OF FIRE
2-50. Electrical wiring and insulation	1. ALPHA
2-51. Magnesium, titanium, and sodium	2. BRAVO
2-52. Flammable liquids, such as gasoline, jet fuel, paints, oil, and grease	3. CHARLIE
2-53. Paper, wood, and mattresses	4. DELTA

Figure 2A

2-54. What type of extinguishers should be used to extinguish a class BRAVO fire?

1. AFFF, Halon 1301, PKP, CO_2, water fog
2. Jettison from ship; use large volumes of water and sand
3. Water and sand
4. CO_2 and Halon 1211 are preferred; PKP can be used

2-55. What type of extinguishers should be used to extinguish a class CHARLIE fire?

1. AFFF, Halon 1301, PKP, CO_2, water fog
2. Jettison from ship; use large volumes of water and sand
3. Water and sand
4. CO_2 and Halon 1211 are preferred; PKP can be used

2-56. What type of extinguishers are used to extinguish a class DELTA fire?

1. AFFF, Halon 1301, PKP, CO_2, water fog
2. Jettison from ship; use large volumes of water and sand
3. Water and AFFF
4. CO_2 and Halon 1211 are preferred; PKP can be used

Learning Objective: Recall the effects of fire and the properties of the gases given off during the combustion process.

2-57. The gases and other products of combustion produced by a fire reduces the amount of oxygen available for breathing.

1. True
2. False

2-58. Carbon monoxide (CO) is a colorless, odorless, tasteless, and nonirritating gas that

1. can kill people even in small concentrations
2. in very large doses can cause minor illness in small animals
3. poses no threat to humans
4. is used as a pesticide aboard ships

2-59. When fighting a fire, keep your OBA on until tests show that the oxygen content of the air is between

1. 23 to 24 percent by volume
2. 20 to 22 percent by volume
3. 18 to 19 percent by volume
4. 15 to 17 percent by volume

2-60. If CO is mixed with air in the amount of 12.5 to 74 percent by volume, an open flame or even a spark will cause

1. a simmering stew of gases
2. a violent explosion
3. the formation of carbon dioxide
4. a chemical reaction that produces carbon nitrate

2-61. A person rendered unconscious by exposure to a heavy concentration of carbon monoxide in an enclosed area will probably die if left in the area for what period of time?

1. Between 8 to 9 minutes
2. Between 6 to 7 minutes
3. Between 4 to 5 minutes
4. Between 1 to 3 minutes

2-62. Carbon dioxide is not poisonous; however, unconsciousness can result if a person is exposed to an atmosphere having a CO_2 volume of

1. 4 percent or higher
2. 5 percent or higher
3. 8 percent or higher
4. 10 percent or higher

2-63. What colorless and odorless gas is a good fire-extinguishing agent and is also used to inert fuel oil tanks?

1. Bromine
2. Hydrogen sulfide
3. Carbon dioxide
4. Oxygen

2-64. What colorless gas smells like rotten eggs and is extremely poisonous and violently explosive?

1. Carbon dioxide
2. Hydrogen sulfide
3. Carbon monoxide
4. Oxygen

2-65. An unprotected person takes one breath in an atmosphere containing 1,000 to 2,000 parts per million (ppm) of hydrogen sulfide. The person will soon become

1. feverish and faint
2. irritable and uncooperative
3. unconscious and possibly die
4. sick on the stomach

Learning Objective: Recall the fundamentals of fire extinguishing.

2-66. The method used to extinguish a fire depends on the classification of the fire and the circumstances surrounding the fire.

1. True
2. False

2-67. To keep fuel away from a fire, you should immediately open supply valves in fuel oil, lube oil, and JP-5 lines.

1. True
2. False

2-68. Heat may be transferred in three ways. These include convection, radiation, and

1. oxidation
2. reduction
3. conduction
4. projection

2-69. A fire that travels from one compartment to another via an airshaft is being spread by what means?

1. Radiation
2. Conduction
3. Convection
4. Projection

2-70. To extinguish a fire, you must reduce the oxygen content of air in an enclosed space to below what percentage?

1. 05
2. 08
3. 12
4. 15

IN ANSWERING QUESTIONS 2-71 THROUGH 2-74, REFER TO FIGURE 2B.

A. PKP

B. AFFF

C. Halon 1301

D. CO_2

Figure 2B

2-71. Which extinguishing agent produces foam bubbles that form a vapor seal when they float over the surface of a flaming fuel?

1. A
2. B
3. C
4. D

2-72 Which extinguishing agent can be used in conjunction with AFFF to put a temporary screen between heat, oxygen, and fuel?

1. A
2. B
3. C
4. D

2-73. Which extinguishing agent is a noncorrosive gas and is also a nonconductor of electricity?

1. A
2. B
3. C
4. D

2-74. Which extinguishing agent is an odorless gas that interrupts the chemical reaction of the fire in a manner similar to the result of using PKP?

1. A
2. B
3. C
4. D

2-75. Do not stay in a space where Halon 1301 has been released unless you are

1. wearing an OBA
2. wearing a rubber apron
3. covered by a fire blanket
4. with at least two other people

ASSIGNMENT 3

Textbook Assignment: “Portable Fire-Fighting and Dewatering Equipment" and "Fire-Fighting Systems," chapters 5 and 6.

Learning Objective: Recall the basic characteristics and operation of portable fire extinguishers.

3-1. When a portable CO_2 extinguisher is not available, a portable PKP fire extinguisher can be used to extinguish a class

1. ALPHA fire
2. BRAVO fire
3. CHARLIE fire
4. DELTA fire

3-2. Portable PKP extinguishers come in what two sizes?

1. 10 pound and 20 pound
2. 12 pound and 22 pound
3. 14 pound and 25 pound
4. 18 pound and 27 pound

3-3. Because it will cake up and form a clog, you should ensure no dry chemical remains in the hose and nozzle after using which of the following extinguishers?

1. Halon
2. CO_2
3. PKP
4. AFFF

3-4. What type of portable fire extinguisher has a stainless steel cylinder and has a 55-65 second continuous discharge time with an initial range of 15 feet?

1. PKP
2. Halon
3. CO_2
4. AFFF

3-5. One AFFF portable fire extinguisher can vapor-seal a fuel spill of approximately what size?

1. 6 feet by 6 feet
2. 5 feet by 5 feet
3. 3 feet by 3 feet
4. 4 feet by 4 feet

3-6. You should never direct the spray from an AFFF portable extinguisher directly into hot cooking oil.

1. True
2. False

3-7. For approximately 40 seconds, the 15-pound CO_2 fire extinguisher can project a spray to what distance?

1. Between 8 to 9 feet
2. Between 7 to 8 feet
3. Between 6 to 7 feet
4. Between 4 to 6 feet

3-8. Before using a CO_2 fire extinguisher, you should take what precaution to avoid shock from static electricity?

1. Release pressure by opening the safety valve
2. Shake the cylinder for a few seconds
3. Ground the cylinder to the deck
4. Tap the cylinder with your fingers

Learning Objective: Recall the basic characteristics and operation of portable fire extinguishers.

3-9. What type of oxygen breathing apparatus (OBA) is used aboard most Navy ships?

1. Type A-1
2. Type A-2
3. Type A-3
4. Type A-4

3-10. The elements that activate the chemicals in the OBA quick-starting canister are the moisture and the

1. carbon in the breastplate assembly
2. citric acid in the facepiece cup
3. CO_2 from your exhaled breath
4. salt tablets in the breathing bag

3-11. When you are involved in hard work, the OBA canister will last for a maximum of how many minutes?

1. 45
2. 30
3. 15
4. 10

3-12. When you remove the cotter pin on the candle cover of an OBA canister, the candle

1. is broken in half
2. fires and the canister starts generating oxygen
3. is pushed to the front of the canister
4. is moved to the firing position

3-13. How often should you test the OBA facepiece for correct seal?

1. Monthly
2. Weekly
3. After each use
4. Before each use

3-14. To set the OBA timer, you turn the timer knob clockwise to 60 minutes and then turn it counterclockwise to 30 minutes.

1. True
2. False

3-15. The chemicals in the OBA canister can cause a violent explosion if they come into contact with

1. moisture
2. soap powder
3. bleach solutions
4. petroleum-based substances

3-16. The OOD may grant overboard disposal of used OBA canisters when your ship is more than how many miles from shore?

1. 10
2. 15
3. 20
4. 25

3-17. What environmental condition is required for the storage area for all OBA equipment and canisters?

1. Hot and humid
2. Cool and dry
3. Hot and dry
4. Cool and wet

3-18. The SCBA is the replacement for the OBA.

1. True
2. False

3-19. Which of the following assemblies is NOT a component of a SCBA?

1. Air tank assembly
2. Regulator assembly
3. Canister assembly
4. Facepiece assembly

3-20. The SAR/SCBA is designed primarily to support

1. fire fighting
2. gas-free testing and inspections
3. radiological defense
4. MOPP operations

3-21. One air cylinder can support a SCBA user for what maximum length of time, in minutes?

1. 40
2. 45
3. 50
4. 55

3-22. The fire-fighter ensemble is NOT a proximity suit. It is designed to protect a fire fighter from short duration flame exposure, heat, and falling debris.

1. True
2. False

Learning Objective: Recall the general characteristics of shipboard dewatering equipment.

3-23. Eductors can remove all breathing air if activated in remote spaces where ventilation is inadequate or not installed.

1. True
2. False

3-24. Before operating eductors, you must have the permission of what officer?

1. OOD
2. EEOW
3. Executive officer
4. Commanding officer

IN ANSWERING QUESTIONS 3-25 THROUGH 3-29, REFER TO FIGURE 3A.

A.	P-100 portable emergency pump
B.	Portable submersible pump
C.	Eductors
D.	Portable AFFF in-line eductor

Figure 3A

3-25. Which equipment draws water from the sea and pumps the water through hoses to supply the firemain and individual hoses?

1. A
2. B
3. C
4. D

3-26. Which equipment is used to mix a concentrate used to produce a solution for combating fires, especially class BRAVO fires?

1. A
2. B
3. C
4. D

3-27. Which equipment is designed to pump heavy oils and flammable liquids?

1. A
2. B
3. C
4. D

3-28. Which equipment has a 1.45-gallon fuel tank that allows a maximum of 2.75 hours of operation?

1. A
2. B
3. C
4. D

3-29. Which equipment should be connected directly to fire plugs to minimize inlet pressure reduction?

1. A
2. B
3. C
4. D

Learning Objective: Recall characteristics of desmoking fans and blowers and other miscellaneous portable damage control equipment.

3-30. What equipment provides power to the Ramfan™ through a 1 1/2-inch connection?

1. Either a portable or fixed eductor
2. Either a fixed eductor or a battery
3. Either the firemain or a P-100 pump
4. Either a battery or a P-100 portable eductor

3-31. Exhausting gases through ducts can create a static electric charge.

1. True
2. False

3-32. Because the Ramfan™ produces static electricity, you must ground the ground strap before its use.

1. True
2. False

3-33. Battle lanterns are mounted in strategic locations to illuminate passageways, damage control equipment, ladders, and scuttles.

1. True
2. False

3-34. The two types of battle lanterns used on ships are identified as either relay or portable.

1. True
2. False

Learning Objective: Recall the types of firemain systems and their function.

3-35. How many basic types of firemain systems can be installed on naval ships?

1. Five
2. Two
3. Three
4. Six

3-36. What type of firemain system consists of two single fore-and-aft, cross-connected mains, installed in the same horizontal plane?

1. Single main
2. Horizontal loop
3. Vertical loop
4. Composite

3-37. What type of firemain system consists of two cross-connected single mains running fore and aft but separated both horizontally and vertically?

1. Vertical offset loop
2. Composite
3. Horizontal loop
4. Single main

3-38. The firemain system distributes water that has been pumped from the sea to fireplugs and other fire-fighting systems as required.

1. True
2. False

Learning Objective: Recall the components and operation of an installed AFFF fire-fighting system.

3-39. What other agents are used in conjunction with AFFF to fight class BRAVO fires throughout the ship?

1. Halon
2. Sand
3. PKP
4. CO

3-40. AFFF is delivered through installed equipment only.

1. True
2. False

3-41. AFFF systems are installed in spaces in a ship where research revealed what type of fires most often occur?

1. DELTA
2. CHARLIE
3. BRAVO
4. ALPHA

3-42. How many types of pumps are used with the installed AFFF system?

1. One
2. Two
3. Three
4. Four

3-43. The AFFF single-speed injection pump is a permanently mounted sliding-vane type of pump.

1. True
2. False

3-44. AFFF single-speed injection pumps are available in what capacities?

1. 21, 24, and 32 gpm
2. 18, 25, and 27 gpm
3. 13, 15, and 20 gpm
4. 12, 27, and 60 gpm

3-45. The AFFF two-speed injection pump system has a positive-displacement pump rated at what pounds per square inch (psi)?

1. 100
2. 125
3. 150
4. 175

3-46. The high-speed mode of the AFFF two-speed injection pump is used when flow demand exceeds what rate?

.

1. 50 gallons per minute (gpm) for hangar bay and 75 gpm for bilge sprinklers
2. 75 gpm for deck-edge sprinklers and 100 gpm for bilge sprinklers
3. 150 gpm for hangar bay and deck-edge sprinklers and 225 gpm for bilge sprinklers
4. 250 gpm for hangar bay and deck-edge sprinklers and 450 gpm for bilge sprinklers

3-47. AFFF transfer pumps have what maximum pumping capacity?

1. 300 gpm
2. 360 gpm
3. 380 gpm
4. 400 gpm

3-48. AFFF is stored in service tanks of 50- to 2,000-gallon capacity and storage/ transfer tanks of up to

1. 1,500-gallon capacity
2. 2,000-gallon capacity
3. 3,500-gallon capacity
4. 4,000-gallon capacity

3-49. Which of the following types of valves are NOT associated with the AFFF system?

1. Powertrol, powercheck, and powertrol valve with test connection
2. Hytrol, hycheck, and solenoid-operated pilot valve
3. Balanced pressure proportioner (Type II), balanced pressure proportioner (Type III), and balancing valve
4. Ballast and mitral

3-50. What type of valve protects the AFFF tank from seawater contamination or dilution?

1. Powertrol
2. Powercheck
3. Hytrol
4. Balanced pressure proportioner

3-51. What type of valve is normally used as a sprinkler group control valve?

1. Hytrol
2. Powercheck
3. Powertrol with test connection
4. Balanced pressure proportioner

3-52. What type of valve controls the flow of AFFF solution to systems?

1. Hytrol
2. Powercheck
3. Powertrol with test connection
4. Balanced pressure proportioner

3-53. What type of valve allows the flow of seawater from the firemain system to be mixed with AFFF concentrate?

1. Hytrol
2. Powercheck
3. Hycheck
4. Balanced pressure proportioner

3-54. What types of valves are electrically operated pilot valves that control the activation of many AFFF fire-extinguishing systems?

1. Hytrol
2. Powercheck
3. Powertrol
4. Solenoid Operated Pilot Valve (SOPV)

3-55. Which of the following types of valves automatically proportions the correct amount of AFFF concentrate with seawater?

1. Hytrol
2. Powercheck
3. Balancing
4. Powertrol

3-56. The balanced pressure proportioner (Type II) proportions the correct amount of AFFF concentrate necessary to produce effective AFFF/water solution over a wide range of flows and pressures.

1. True
2. False

3-57. What system provides a convenient and quick method for the fire party to apply AFFF/water solution or water to large areas of burning fuel?

1. Firemain system
2. AFFF sprinkler system
3. Halon system
4. APC system

3-58. What system uses the countermeasure washdown flush-deck nozzles to discharge AFFF/water solution during flight deck and helo deck fires?

1. Firemain system
2. AFFF sprinkler system
3. Halon system
4. The flush-deck system

3-59. The service tank of the AFFF system always contains enough concentrate to combat any large fire.

1. True
2. False

3-60. All AFFF generating station service tanks can be replenished once the transfer main is pressurized either by the reserve pump or the on-station pump.

1. True
2. False

3-61. AFFF testing equipment includes the hand refractometer and what other piece of equipment?

1. Spectrograph
2. Reflex condenser
3. M-8 paper
4. Quantab chloride titrator strip

3-62. What instrument gives accurate readings of total dissolved solids in aqueous solutions?

1. Spectrograph
2. Hand refractometer
3. Reflex condenser
4. Spectrometer

3-63. After taking hand refractometer readings, you can determine the percent of AFFF concentrate that is being proportioned with water by using the following formula:

$$\frac{A}{B} \times 100 = \%\ of\ AFFF\ concentrate$$

1. True
2. False

3-64. Quantab chloride titrator strips are used to measure what chemical compound in aqueous solutions?

1. Sodium hydroxide
2. Sulfuric acid
3. Sodium chloride (salt)
4. Potassium cyanide

3-65. The allowable limit for chloride contamination of AFFF concentrate is 2,000 ppm, which equates to what percent contamination?

1. 10
2. 20
3. 30
4. 40

3-66. There are how many types of installed CO_2 flooding systems?

1. One
2. Two
3. Three
4. Four

3-67. You should always direct the CO_2 discharge

1. at the base of a fire
2. at the middle of a fire
3. at the top of a fire
4. above a fire

3-68. The number of valve control devices provided for a CO_2 flooding system depends upon the number of cylinders in the bank.

1. True
2. False

3-69. Aboard aircraft carriers, what type of fire extinguishing system is normally installed in the gas-powered bomb hoist storerooms?

1. Firemain system
2. AFFF sprinkler system
3. Halon 1301 system
4. Flush-deck system

3-70. Sufficient Halon is required so the concentration will remain at a minimum of 5 percent for how many minutes?

1. 45
2. 30
3. 15
4. 10

3-71. Each Halon fixed-flooding system is designed to discharge completely the Halon 1301 gas into the protected space within how many seconds?

1. 40
2. 30
3. 20
4. 10

3-72. What fire-extinguishing system provides protection for galley deep-fat and doughnut fryers and their exhaust systems?

1. APC
2. PKP
3. Halon 1301
4. Installed CO_2

ASSIGNMENT 4

Textbook Assignment: "Fire-Fighting Tactics," chapter 7.

Learning Objective: Recall the characteristics of different classes of fire, the stages of a fire, and the basic tactics and strategies to attack and extinguish the different classes of fires.

4-1 When there is an electrical fire and power is out throughout the ship, what type of pumps can be used to restore the firemain?

1. Portable P-100
2. Vertical submerged
3. Fixed centrifugal
4. Fixed reciprocating

4-2. Which of the following conditions can contribute to the spread of fire?

1. Inoperative ventilation ducts
2. Inoperative scupper valve
3. Set smoke boundaries
4. Set fire boundaries

4-3. Which of the following is NOT the job of an investigator?

1. Check boundaries
2. Report smoke
3. Rove assigned area
4. Take control of fire party

4-4. A key element for effective damage control is training that enables personnel to perform a variety of fire party tasks.

1. True
2. False

4-5. What are the four classes of fire?

1. ALPHA, BRAVO, ECHO, and FOXTROT
2. ALPHA, BRAVO, CHARLIE, and OSCAR
3. ALPHA, BRAVO, DELTA, and YOKE
4. ALPHA, BRAVO, CHARLIE, and DELTA

4-6. What type of fire is present when the burning material leaves an ash?

1. ALPHA
2. BRAVO
3. ECHO
4. OSCAR

4-7. What type of fire is present when a fuel tank is burning?

1. ALPHA
2. BRAVO
3. DELTA
4. OSCAR

4-8. A fire in a switchboard should be reported as what class of fire?

1. ALPHA
2. BRAVO
3. CHARLIE
4. OSCAR

4-9. What type of fire is present when a magnesium wheel from an airplane is burning?

1. ALPHA
2. BRAVO
3. CHARLIE
4. DELTA

4-10. What is the lowest temperature at which a liquid will give off sufficient vapor to form an ignitable mixture?

1. Vapor point
2. Flashpoint
3. Ignition point
4. Reflash

4-11. Which of the following is a primary source for information about each hazardous product carried onboard a ship?

1. Safety bulletins
2. Material safety data sheets
3. Deckplate pamphlets
4. Product instructions

4-12. What is the best fire-fighting agent to use to extinguish a class ALPHA fire?

1. Water
2. AFFF
3. CO_2
4. PKP

4-13. What classification of fire is also known as a "combustible metal fire?"

1. ALPHA
2. BRAVO
3. CHARLIE
4. DELTA

4-14. What fire-fighting agent should you use to extinguish a class CHARLIE fire?

1. Water
2. AFFF
3. PKP
4. CO_2

4-15. What is the minimum safe distance for a person applying a water fog to an energized circuit?

1. 1 foot
2. 2 feet
3. 3 feet
4. 4 feet

4-16. Because of the certain danger of electrical shock, you should never apply a straight stream of water to a class CHARLIE fire.

1. True
2. False

4-17. Which of the following reactions is defined as a chemical decomposition due to the application of heat?

1. Photosynthesis
2. Pyrolysis
3. Breakdown
4. Decay

4-18. A liquid fuel releases vapor at a higher rate than a solid fuel does.

1. True
2. False

4-19. What is the most obvious characteristic of flashover?

1. Burst of smoke
2. Sudden spreading of flame
3. Hot gassing effect
4. Large embers

4-20. What factor must occur to have a fully developed fire?

1. Large fuel source
2. All flammables have reached ignition temperature
3. All flammables have reached flashpoint
4. Large amounts of oxygen

4-21. Personnel still in the compartment when flashover occurs are not likely to survive.

1. True
2. False

4-22. Which of the following is NOT an element in the fire triangle?

1. Carbon dioxide
2. Oxygen
3. Heat
4. Fuel

4-23. What is the lowest percentage of gas that will make an ignitable mixture called?

1. Upper explosive limit
2. Middle explosive limit
3. Lower explosive limit
4. Base explosive limit

4-24. What limit is reached when a mixture is too rich to burn?

1. Above the upper explosive limit (UEL)
2. Above the middle explosive limit (MEL)
3. Above the lower explosive limit (LEL)
4. Above the base explosive limit (BEL)

4-25. What is the range between the lower and upper explosive limits of a gas called?

1. Explosive limits
2. Explosive range
3. Explosive magnitude
4. Explosive scope

Learning Objective: Recall the duties and responsibilities of an attack team while responding to a fire and the use of specific fire-fighting equipment.

4-26. What person is in charge of the rapid response team during the initial stages of a fire?

1. Fire marshal
2. On-scene leader
3 Team leader
4. Investigator

4-27. During what condition does a ship have maximum capability to withstand and recover from damage?

1. Chemical attack
2. Standard underway
3. General quarters
4. Mass conflagration

4-28. What action must a person take to get into what is considered battle dress?

1. Tuck trouser legs into socks and don an anti-flash hood
2. Fully button up all worn clothing and tuck trouser legs into socks
3. Fully button up all clothing, tuck trouser legs into socks, and wear a ball cap
4. Fully button up all worn clothing, tuck trouser legs into socks, and wear an anti-flash hood and gloves

4-29. What rate is responsible for life preservers stowed in repair lockers?

1. Boatswain's Mate
2. Damage Controlman
3. Electrician's Mate
4. Hospital Corpsman

4-30. When manning GQ, you should have what additional equipment with you at your battle station?

1. Canteen and web belt
2. Extra uniform and hat
3. Anti-flash hood and gloves
4. MCU2-P mask and a life preserver

4-31. When at sea, during GQ Condition 1, a particular fire party may request assistance from a different repair locker if needed. In port, however, this option may not be available.

1. True
2. False

4-32. A repair party is a part of the damage control organization as specified in what publication?

1. NWP 3-10.12
2. NWP 3-20.31
3. NWP 3-30.11
4. NWP 3-40.14

4-33. The number of repair parties aboard a ship depends on the size and configuration of the ship.

1. True
2. False

4-34. During a fire, every attempt must be made to account for all space personnel. Personnel reported missing should be reported to what watch station?

1. DCM
2. DCD
3. DCC
4. DCW

4-35. Circuits are available for investigators to use to make reports, and many ships have hand-held radios for damage control use.

1. True
2. False

4-36. Emergency escape breathing devices (EEBDs) are used to provide a limited amount of breathable oxygen to evacuating personnel and are not used to combat a fire.

1. True
2. False

4-37. In engineering spaces, watch standers carry what type of breathing device?

1. Emergency support breathing apparatus (ESBA)
2. Supplementary emergency egress devices (SEEDs)
3. Auxiliary escape breathing devices (AEBDs)
4. Secondary egress breathing apparatus (SEBA)

4-38. What is the service life of the Ocenco M-20.2 EEBD?

1. 25 years
2. 20 years
3. 15 years
4. 12 years

4-39. The Ocenco M-20.2 EEBD provides a maximum of how many minutes of oxygen for escape?

1. 10
2. 22
3. 32
4. 45

4-40. The compressed oxygen and mouthpiece combination allows the Ocenco M-20.2 EEBD to be donned in a smoke-filled environment.

1. True
2. False

4-41. The storage container for the trainer EEBD is blue. What color is the storage case for the actual EEBD?

1. Red
2. Purple
3. Orange
4. Green

4-42. What person at the scene of the fire makes the decision to leave the lights on in the affected space?

1. Executive officer
2. DCA
3. Fire marshal
4. On-scene leader

4-43. What document lists both primary and secondary smoke boundaries?

1. Ship's bell log
2. Ship's information pub
3. DCC logbook
4. Ship's fire doctrine

4-44. Primary fire and smoke boundaries are set at all bulkheads immediately adjacent to a fire. A secondary set of boundaries is set at the next immediate watertight bulkhead from the scene.

1. True
2. False

4-45. What person maintains plots of all damage control information throughout the ship, and passes all pertinent information to the scene leader?

1. Damage control assistant (DCA)
2. Locker leader
3. Damage control supervisor
4. Engineer officer

4-46. Before using the NFTI, you must warm it up in accordance with the manufacturer's technical manual.

1. True
2. False

4-47. The NFTI is a device that allows the user to see through dense smoke and light steam by sensing the difference in infrared radiation given off by objects with a temperature difference of at least how many degrees, in Fahrenheit.

1. 1
2. 2
3. 3
4. 4

4-48. How many LEDs does the battery-operated NFTI display when fully charged?

1. 8
2. 7
3. 6
4. 5

4-49. How many minutes should be allowed for the NFTI to warm up?

1. 1
2. 2
3. 3
4. 4

4-50. How many minutes should the AFFF be activated prior to re-entry?

1. 1
2. 2
3. 3
4. 4

4-51. When halon is effective, you should wait a minimum of how many minutes prior to re-entry of the space?

1. 10 min
2. 12 min
3. 15 min
4. 20 min

4-52. An indirect attack is used when conditions do not allow fire fighters to enter the space.

1. True
2. False

Learning Objective: Recall various methods available to coordinate movements of hose teams to combat a fire effectively.

4-53. Which of the following is NOT a symptom of heat stress?

1. The skin appears ashy gray; the skin is moist and clammy
2. The pupils of the eyes are dilated
3. Abnormal vital signs
4. Heavy sweating

4-54. Once reflash is set, what person directs a second hose team to search for hangfires?

1. Investigator
2. On-scene leader
3. Team leader
4. Plugman

Learning Objective: Recall the procedures used once a fire is extinguished to prepare the compartment for remanning.

4-55. The safest method of desmoking is to exhaust the compartment with portable fans or to provide positive ventilation pressure from adjacent compartments.

1. True
2. False

4-56. What activity must be completed prior to atmospheric testing when Halon has been used to extinguish a fire in a space?

1. Overhaul
2. Status reporting
3. Desmoking
4. Dewatering

4-57. What is the minimum percentage of oxygen that must be in the atmosphere once a space is clear of smoke?

1. 10%
2. 15.3%
3. 19.5%
4. 40%

4-58. Combustible gases must be less than what percent of the LEL, and all toxic gases must be below their threshold limits before a space is certified safe for personnel without breathing devices?

1. Below 10%
2. Below 20%
3. Below 30%
4. Below 40%

4-59. After a class BRAVO fire, which of the following is NOT a gas you should test for when conducting a toxic gas test in the compartment?

1. Hydrocarbons
2. Carbon dioxide
3. Carbon monoxide
4. Helium

4-60. If Halon 1301 was discharged into the compartment, a test for hydrogen fluoride must also be conducted. What personnel are authorized to conduct these tests?

1. The DCA and the engineer officer
2. The gas free engineer and the gas free petty officer
3. Any damage controlman or electrician
4. Repair party leader or locker supervisor

ASSIGNMENT 5

Textbook Assignment: "Battle Damage Repair," chapter 8.

Learning Objective: Identify the various types of damage control equipment and material and recall the maintenance and inventory requirements for each.

5-1. What publication has several repair locker inventory lists for different types of ships?

1. Navy Ship's Equipment List
2. Allowance Equipage List
3. *NSTM* 555
4. COSAL, volume 1

5-2. A typical repair locker usually contains a total of how many OBAs?

1. 25
2. 22
3. 19
4. 18

5-3. Frequent inspections of damage control equipment should be conducted following what guidelines?

1. QC
2. LCPO prepared
3. PMS
4. SIMA

5-4. What method is used to provide identification of individual tools and equipment belonging to a specified repair locker?

1. Engraved brass templates attached to the equipment
2. A strip of tape that is the color assigned to identify the repair locker
3. Ribbon tied to equipment that is the color assigned to identify the repair locker
4. A spot or striped band of paint of the color assigned to identify the repair locker

5-5. Damage control equipment does not have to be reserved for damage control purposes only.

1. True
2. False

5-6. Because all damage control kits must be inventoried after each use, you must ensure each kit has

1. the name of the repair locker printed on it
2. an inventory number assigned
3. a list of contents attached to the carrying strap
4. the name of the repair party leader on a card taped to the kit

5-7. What publication provides a list of the amount of each item of damage control equipment allowed for the ship?

1. *COSAL*
2. *COSA*
3. *DCAL*
4. *CAL*

Learning Objective: Recall factors that affect underwater repairs and the procedures used for plugging and patching holes in the hull of a ship.

5-8. Dewatering can be effective only after what two measures have been taken?

1. Openings have been identified and the size of holes has been determined
2. Pumps have been primed and damage control areas assigned
3. Flooding boundaries are determined and patching material is inspected
4. Holes or openings have been plugged and flooding boundaries are established and maintained

5-9. The one very important thing to remember about flooding is that a ship can sink just as easily from a series of small holes, as it can from one large hole.

1. True
2. False

5-10. Holes at the waterline or on the low side (if the ship is listing) have top priority for plugging.

1. True
2. False

5-11. A hole 7 feet below the waterline is only subjected to a water pressure of how many pounds per square inch?

1. 5
2. 8
3. 3
4. 4

5-12. Plugs made of softwood, such as yellow pine or fir, are effective for plugging holes of what size?

1. Up to 9 by 9 inches
2. Up to 8 by 8 inches
3. Up to 3 by 3 inches
4. Up to 6 by 3 inches

5-13. A plug should be wrapped with what type of material before being inserted into a hole in the ship?

1. Thick canvas
2. Lightweight cloth
3. Any type of paper
4. Nylon tape

5-14. Square ended plugs tend to hold better than conical plugs in holes located in plating that is one-fourth of an inch or less in thickness.

1. True
2. False

5-15. If it is necessary to insert a plug from the outside of the hull, you should fit the inboard ends of the plugs with

1. screw eyes
2. bolts
3. U joints
4. nails

5-16. What type of patch is effective for use over holes that have jagged edges projecting inboard?

1. Hinged plate
2. Hook bolt
3. Nylon
4. Box

5-17. What type of patch has no vertical support and is designed for use over relatively small holes?

1. Box
2. Hinged
3. Wedge
4. Folding T

5-18. Hook bolts used to apply patches do NOT come in which of the following shapes?

1. T
2. L
3. J
4. S

5-19. Ordinary feather pillows have a tendency to ball up when they are wet and do not provide a uniform surface when used to patch holes. For this reason some ships carry special pillows made of canvas and

1. rubber
2. wood
3. oakum
4. plastic

Learning Objective: Identify the various types of shoring materials and the general rules that govern their use.

5-20. What is a shore?

1. Portable beam
2. Triangular-shaped piece of steel
3. Foot-long iron rod
4. Wedge-shaped piece of wood

5-21. Shoring is often used aboard ship to strengthen weakened bulkheads and decks, to support hatches and doors, and to provide support for equipment that has broken loose.

1. True
2. False

5-22. The general rule to follow for shoring is "If in doubt, shore it."

1. True
2. False

5-23. What basic piece of shoring material is a block that is triangular on the sides and rectangular on the butt end?

1. Jubilee
2. Strongback
3. Wedge
4. Shole

5-24. What basic piece of shoring material is a flat block that may be placed under the end of a shore to distribute pressure?

1. Wedge
2. Strongback
3. Jubilee
4. Shole

5-25. What basic piece of shoring material is a bar or beam of wood or metal that is used to distribute pressure or to serve as an anchor for a patch?

1. Wedge
2. Strongback
3. Jubilee
4. Shole

5-26. What types of wood are preferred for shoring material?

1. Pecan and oak
2. Balsa and hickory
3. Hemlock and walnut
4. Yellow pine and Douglas fir

5-27. The length of a shore should NEVER be more than how many times the minimum thickness of the shore?

1. 20
2. 25
3. 30
4. 35

5-28. A wedge should be how many times as long as it is thick?

1. Seven
2. Six
3. Three
4. Four

5-29. Sholes should be made of Douglas fir or yellow pine planks that are 8 to 12 inches wide and how many inches thick?

1. 1
2. 2
3. 3
4. 4

5-30. What is the nomenclature for the two latest models of steel-metal shores?

1. Models 1-8 and 8-19
2. Models 2-3 and 7-14
3. Models 3-5 and 6-11
4. Models 4-9 and 5-16

5-31. The model 6-11 steel shore is adjustable from 6 feet, plus or minus 3 inches, to a maximum of

1. 10 feet, plus or minus 6 inches
3. 11 feet, plus or minus 3 inches
3. 12 feet, plus or minus 6 inches
4. 14 feet, plus or minus 3 inches

5-32. The model 3-5 steel shore is adjustable to a maximum of 5 feet plus or minus 3 inches and can support what maximum load when fully extended?

1. 12,000 pounds
2. 14,000 pounds
3. 16,000 pounds
4. 18,000 pounds

5-33. Both the swivel joints and the threads on a screw jack should be cleaned and greased before the jack is used.

1. True
2. False

5-34. Steel wedges are for use as shoring and should not be used for prying things apart.

1. True
2. False

5-35. Steel sholes are better than wooden sholes for use under the ends of iron or metal pipe being used as a temporary stanchion.

1. True
2. False

5-36. Although steel bars, angle irons, and pipe can be used for strongbacks, their tendency to spring back and forth under variable loads must be considered.

1. True
2. False

5-37. Each repair party locker is required to have a shoring batten.

1. True
2. False

5-38. The distance measured from the center of a strongback to the deck is known as the

1. sink
2. incline
3. rise
4. corrected run

5-39. A sharp point must never be used when a shore will be required to withstand pressure.

1. True
2. False

5-40. A basic rule of shoring is to put as many points of pressure on a closure as there are dogs on the closure.

1. True
2. False

5-41. The success of any shoring job depends largely on the way in which the timbers are

1. tied
2. wedged
3. hinged
4. nailed

5-42. When shoring a door that has eight dogs, you should use how many pressure points?

1. Six
2. Two
3. Eight
4. Four

5-43. The wedge for a 4- by 4-inch shore should be 4 inches wide, 2 inches thick, and how many inches long?

1. 24
2. 18
3. 16
4. 12

Learning Objective: Recall the requirements and procedures for using emergency access equipment.

5-44. What equipment is available for use on the ship in case a space is inaccessible due to damaged doors, hatches, and scuttles?

1. PEPS and the TCU
2. PHARS and the PECU
3. PECK and PRS
4. PHRS and the PECK

5-45. What system is used for fire-fighting operations involving spreading, cutting, pulling, and piercing light plate or sheet metal?

1. PEPS
2. PECS
3. PECK
4. PHARS

5-46. The hose reel for the PHARS has how many feet of hydraulic hose attached to it?

1. 160
2. 150
3. 130
4. 100

5-47. The PECU can be used for cutting into a deck to vent a compartment due to extreme temperatures from fire that prevents normal entry.

1. True
2. False

5-48. The PECU uses expendable cutting rods that operate on the

1. oxidation principle
2. exothermic torch principle
3. kinetic heat principle
4. gas torch principle

5-49. The PECU should not be used to cut piping that is pressurized, piping that contains flammable fluids, or electrical cables that are energized.

1. True
2. False

5-50. The exothermic torch produces sparks and molten slag that can burn personnel, damage equipment, or ignite combustibles on both sides of the deck or bulkhead being cut.

1. True
2. False

Learning Objective: Recall emergency pipe patching procedures.

5-51. Small holes in some piping may be temporarily repaired if you drill the hole out, thread it, and then insert a

1. machine screw
2. nail
3. piece of cloth
4. caulking compound

5-52. Which of the following types of pipe patches is NOT normally used in emergency pipe-patching situations?

1. Temporary
2. Jubilee
3. Metalic
4. Soft

5-53. When using the jubilee pipe patch, you place a piece of rubber or gasket material over the hole that is large enough to cover and overlap the damage on all sides by at least how many inches?

1. 5
2. 2
3. 3
4. 4

5-54. A jubilee pipe patch can withstand a maximum of how many pounds of pressure?

1. 130
2. 120
3. 110
4. 100

5-55. A soft patch can be used on a pipe that carries what maximum pressure?

1. 100 psi
2. 120 psi
3. 150 psi
4. 190 psi

Learning Objective: Recall the purpose of the casualty power system and describe the components of the system.

5-56. The casualty power system is used to maintain a source of electrical power for the most vital machinery and equipment needed to keep the ship afloat or to get the ship out of a danger area.

1. True
2. False

5-57. The casualty power system is designed to provide power during real emergencies only. It must NOT be used as a means of making temporary routine repairs.

1. True
2. False

5-58. Portable casualty power cables are equipped with metal tags that indicate the length of the cable and the

1. name of the manufacturer
2. type of insulation in the cable
3. nearest power source
4. location of the cable stowage rack

5-59. Portable signs saying DANGER—HIGH VOLTAGE must be posted at each connection and along the length of a casualty power cable at what intervals, in feet?

1. 20
2. 15
3. 12
4. 10

5-60. Sources of supply for casualty power use are provided at each ship's

1. watch station
2. service and emergency switchboard
3. damage control locker
4. firemain

5-61. The normal supply to a power panel must be shut OFF before the casualty power cable is connected to terminals.

1. True
2. False

5-62. When connecting casualty control power cables to terminals, you should connect the power terminal faces labeled A, B, and C to what color cables, respectively?

1. Black, orange, and green
2. White, red, and blue
3. Red, yellow, and blue
4. Black, white, and red

5-63. What method is used to identify the A, B, and C casualty control terminals by touch?

1. Pieces of twine
2. O rings and heat-shrinkable tubing
3. Rectangular metal strips
4. Raised letters

5-64. When connecting a casualty power cable run, you must always connect from the load to the source of supply.

1. True
2. False

ASSIGNMENT 6

Textbook Assignment: "Chemical and Biological Warfare Defense," chapter 9.

Learning Objective: Recall the function and use of protective equipment designed for CBR defense.

6-1. Biological and chemical substances for military use are primarily antipersonnel agents.

1. True
2. False

6-2. Detailed information on biological warfare (BW) and chemical warfare (CW) agents can be found in what chapter of the *Naval Ships' Technical Manual*?

1. 230
2. 322
3. 470
4. 528

6-3. The MCU-2 protective mask is available in how many sizes?

1. 1
2. 2
3. 3
4. 4

6-4. After the protective mask has been donned and checked for correct fit, you should perform a negative pressure check.

1. True
2. False

6-5. Before donning a protective mask, you should replace unapproved eyeglasses and contact lenses with authorized combat spectacles.

1. True
2. False

6-6. To remove the mask from the mask carrier, you should always pull on the outlet valve.

1. True
2. False

6-7. If inhalation is too forceful while checking for leaks, the facepiece of the protective mask will collapse against the face.

1. True
2. False

6-8. After doffing a mask, you should clean and dry the mask according to

1. QC regulations
2. LCPO instructions
3. department SOPs
4. current PMS requirements

6-9. The MCU-2/P protective mask uses a single filter canister, designated

1. C1
2. C2
3. C3
4. C4

6-10. A C2 canister is labeled a training canister how many days after being removed from packaging?

1. 15
2. 30
3. 45
4. 60

6-11. To provide identification, a stripe of what color is painted around the rim of a C2 training canister?

1. Red
2. Blue
3. Green
4. White

6-12. A C2 canister is good for a total of how many blood agent attacks?

1. 1
2. 2
3. 3
4. 4

6-13. The canteen used with the MCU-2/P protective mask has a M1 cap that allows the wearer to replenish fluids while wearing the mask.

1. True
2. False

6-14. The function of the chemical protective overgarment (CPO) is to protect the wearer from chemical agents in liquid form and from their associated vapor.

1. True
2. False

6-15. The CPO has a wear time in a contaminated environment of a total of how many hours?

1. 8
2. 7
3. 6
4. 4

6-16. The chemical protective ensemble (CPE) consists of the CPO, a protective mask, and a pair of boots and gloves.

1. True
2. False

Learning Objective: Describe the effects of the different forms of CW agents.

6-17. Chemical agents are primarily designed to produce which of the following effects?

1. Accelerate the spread of diseases
2. Oxidation of materials
3. Corrosion of metals
4. Disorganization of the functions of the human body

IN ANSWERING QUESTIONS 6-18 THROUGH 6-24, REFER TO FIGURE 6A.

A.	Nerve agent
B.	Blister agent
C.	Blood agent
D.	Choking agent
E.	Vomiting agent
F.	Tear agent

Figure 6A

6-18. Which agent works by disturbing the chemical processes of the nervous system and stopping bodily functions?

1. A
2. C
3. D
4. E

6-19. Which agent affects the eyes and upper respiratory tract?

1. B
2 C
3. E
4. F

6-20. Which agent can enter the body through any exposed skin?

1. A
2 C
3. E
4. F

6-21. Which agent is dispersed as an aerosol and produces effects when it is inhaled?

1. A
2 C
3. E
4. F

6-22. The effects of the distilled mustard form of this agent do not usually appear until 4 to 6 hours after exposure.

1. A
2 B
3. C
4. D

6-23. Hydrogen cyanide (AC) is an example of which agent?

1. A
2 C
3. E
4. F

6-24. The use of which agent is limited because it reacts rapidly to water to yield nontoxic hydrolysis products?

1. A
2 B
3. D
4. F

6-25. To prevent serious injury, you must begin decontamination of blister agents within how many minutes after exposure?

1. Between 1 and 2
2. Between 3 and 4
3. Between 5 and 6
4. Between 7 and 8

6-26. Of the following chemical agents, which one is NOT a nerve agent?

1. Tabun (GA)
2. Sarin (GB)
3. Phosgene (CG)
4. Soman (GD)

6-27. When inhaled, the liquid droplets of V agents are how many times as toxic as the older G series nerve agents?

1. Ten
2. Two
3. Three
4. Five

6-28. During winter months, the HD blister agent may produce casualties for what maximum length of time after application?

1. 45 minutes
2. 12 hours
3. 10 days
4. Several weeks

6-29. Incapacitating agents are not predictable and may change from dose to dose and person to person.

1. True
2. False

6-30. Which of the following symbols identifies an incapacitating agent that is a slow-acting aerosol?

1. AC
2 BZ
3. DM
4. CG

Learning Objective: Recall the function and use of equipment and materials used to detect chemical warfare (CW) agents.

6-31. M-8 detector paper is used to detect V, G, and H agents that are in what form?

1. Gas
2. Vapor
3. Liquid
4. Aerosol

6-32. Response time for the M-8 detector paper is approximately how many seconds?

1. 10
2. 12
3. 15
4. 20

6-33. The M-9 chemical detector paper is issued by the roll. The roll is 30 feet long and how many inches wide?

1. 1
2. 2
3. 3
4. 4

IN ANSWERING QUESTIONS 6-34 THROUGH 6-39, REFER TO THE CW DETECTORS IN FIGURE 6B.

A. M8

B. M9

C. M256A1

D. M18A2

E. CWDD AN/KAS-1

F. CAPDS

Figure 6B

6-34. Which detectors use sensitized paper to check for nerve agents G and V and blister agents H and L?

1. A and B
2. C and D
3. E and F
4. D and F

6-35. Which detector uses sensitized paper that turns red when any chemical agent is detected?

1. F
2. E
3. B
4. C

6-36. Which detector includes a kit that has 12 sampler detectors that are used to check for CW agents in the liquid form?

1. F
2. E
3. D
4. C

6-37. Which detector is a passive infrared imaging sensor designed for use on ships?

1. A
2. B
3. C
4. E

6-38. Which detector is a local sampling detection device that has an ionization and detection system that draws air samples into a heater block?

1. E
2. F
3. D
4. C

6-39. Which detector is used for automatic continuous sampling of the outside air and warns of CW agents by activating the ship's alarm system?

1. C
2. D
3. E
4. F

6-40. Most chemical agent detection devices indicate the presence of chemical agents by

1. the production of orange smoke
2 dissolving in the chemical
3. emitting shrill sounds
4. color changes that are chemically produced.

6-41. M-8 chemical detector paper is issued in a book containing a total of how many split sheets?

1. 10
2 25
3. 35
4. 40

6-42. When conducting maintenance on the AN/KAS-1 CWDD, you should always refer to the manufacturer's technical manual and the PMS system.

1. True
2. False

6-43. Contamination marking kits contain markers for identifying contaminated areas. What color markers are used for chemical and biological areas?

1. Yellow for chemical and blue for biological
2 Green for chemical and brown for biological
3. Purple for chemical and black for biological
4. Red for chemical and orange for biological

Learning Objective: Recall the requirements for biological warfare (BW) defense.

6-44. BW operations are the use of living agents to cause the spread of disease and possible death among humans.

1. True
2. False

6-45. Which of the following is a powerful toxin produced by bacteria?

1. Pneumonia
2 Typhoid fever
3. Diphtheria
4. Smallpox

6-46. Many viruses are so small that they can only be seen through an electron microscope.

1. True
2. False

6-47. Disease vectors are animal carriers that transfer infective agents from one host to another.

1. True
2. False

6-48. Disease vectors are divided into how many classifications?

1. 5
2. 2
3. 3
4. 4

IN ANSWERING QUESTIONS 6-49 THROUGH 6-54, REFER TO FIGURE 6C.

A.	Bacteria
B.	Rickettsiae
C.	Viruses
D.	Fungi
E.	Protozoa

Figure 6C

6-49. Which of the microorganisms are small single-cell organisms?

1. A
2. B
3. C
4. D

6-50. Which of the microorganisms grow only within living cells?

1. A and D
2. D and E
3. B and C
4. C and D

6-51. Which of the microorganisms cause the diseases typhoid fever, meningitis, and tuberculosis?

1. D
2. C
3. B
4. A

6-52. Which of the microorganisms cause Rocky Mountain spotted fever and typhus?

1. A
2. B
3. C
4. E

6-53. Which of the microorganisms cause amoebic dysentery and malaria?

1. B
2. C
3. D
4. E

6-54. Which of the microorganisms is best known for its ability to spoil food and fabrics?

1. B
2. C
3. D
4. E

6-55. What classification of disease vectors transmits organisms from one host to another?

1. Active
2. Passive
3. Biological
4. Mechanical

6-56. Mosquitoes that transmit malaria and yellow fever are what type of vectors?

1. Active
2. Passive
3. Biological
4. Mechanical

6-57. Which of the following members of the animal kingdom is not normally considered a pest?

1. Rat
2. Horse
3. Starling
4. Groundhog

6-58. The presence of a large number of parasites on the surface of an animal's body is known as

1. a canker
2. a tangle
3. a gaggle
4. an infestation

6-59. Ticks and mites are examples of what military biology refer to as

1. microbes
2. protozoa
3. vectors
4. host

6-60. Microorganisms are divided into a total of how many distinct classifications?

1. Eight
2. Seven
3. Six
4. Five

6-61. Microorganisms capable of producing a disease are known as

1. pathogens
2. vectors
3. pests
4. halogens

6-62. What microorganism causes influenza?

1. Rickettsiae
2. Protozoa
3. Fungi
4. Virus

6-63. The effects of pathogens are always delayed and this period can vary from hours to weeks.

1. True
2. False

Learning Objective: Recall CW and BW countermeasures employed when a ship is at sea to include closure, washdown, and weathering.

6-64. Which of the following actions is NOT a ship protective action taken when at sea?

1. Weathering
2. Closure
3. Heat release
4. Washdown

6-65. The closure system is designed to protect the interior of the ship from the entry of

1. rain
2. vectors
3. gases
4. microbes

6-66. What system is a dry pipe sprinkler system that provides a moving screen of water over the weather surfaces of the ship?

1. Collective Protection System (CPS)
2. Firemain decon
3. Halon 1301
4. Countermeasures washdown (CMWD)

6-67. Weathering is the gradual reduction of a persistent hazard due to the effects of the environment.

1. True
2. False

6-68. Personnel working in proximity of a decontamination operation should wear protective clothing and mask until what person declares the area safe?

1. Executive officer
2. Damage control officer
3. Officer of the deck
4. Damage control assistant

6-69. What kit is used to decontaminate liquid chemical agents from exposed skin areas by physical removal, absorption, and neutralization?

1. M8
2. M9
3. M291 SDK
4. M16A1

6-70. After a chemical attack, exposed personnel must reenter the ship through what area?

1. Contamination Central Area (CCA)
2. Decontamination Central Area (DCA)
3. Contamination Control Area (CCA)
4. Decontamination Central Control Area (DCCA)

6-71. Multiple decon stations and the availability of both salt and freshwater provide for working around contaminated areas and battle-damaged areas.

1. True
2. False

6-72. What is the optimum size for CCA spaces?

1. 9’ by 9’
2. 8’ by 7’
3. 7’ by 7’
4. 6’ by 8’

6-73. The collective protection system (CPS) is a ventilation system that prevents CBR contamination from the interior of the ship.

1. True
2. False

6-74. Maintenance and operation of the CPS should be in compliance with the ship-specific PMS requirements.

1. True
2. False

6-75. There must be an ongoing review of the CBR defense bill because of the rapid technological changes in the CBR countermeasures program.

1. True
2. False

ASSIGNMENT 7

Textbook Assignment: "Radiological Effects" and "Radiological Defense and Recovery," chapters 10 and 11.

Learning Objective: Recall the components of an atom.

7-1. An atom is made up of subatomic particles known as electrons, protons, and neutrons.

1. True
2. False

7-2. What number of electrons must be orbiting the nucleus of an atom for the electrical charge of the atom to remain neutral?

1. Ten
2. Twelve
3. Twenty
4. A number equal to the number of protons in the nucleus

7-3. What subatomic particle, if any, has a negative electrical charge?

1. Proton
2. Neutron
3. Electron
4. None

7-4. What subatomic particle, if any, has a positive electrical charge?

1. Electron
2. Proton
3. Neutron
4. None

7-5. What subatomic particle, if any, has no electrical charge?

1. Electron
2. Proton
3. Neutron
4. None

7-6. The process that causes the splitting of the nucleus of a heavy element that results in a gigantic explosion is known as

1. oxidation
2. ionization
3. amalgamation
4. fission

Learning Objective: Recall the different types of nuclear bursts and their effects.

7-7. Some of the effects of a nuclear burst occur in and last only microseconds, while others occur in microseconds but linger for days, months, or even years.

1. True
2. False

7-8. Approximately 50 percent of the energy released from a nuclear detonation below an altitude of approximately 100,000 feet produces blast and shock, about 35 percent produces thermal radiation, and about 15 percent produces nuclear radiation.

1. True
2. False

7-9. Of the energy released from a nuclear detonation below approximately 100,000 feet, 15 percent produces nuclear radiation. About 5 percent of this radiation is known as initial nuclear radiation and the other 10 percent is known as

1. supplemental nuclear radiation
2. secondary nuclear radiation
3. tertiary nuclear radiation
4. residual nuclear radiation

7-10. What type of nuclear radiation is delivered simultaneously with the detonation of a nuclear burst and cannot be avoided by maneuvering or evasive actions?

1. Residual
2. Supplemental
3. Initial
4. Thermal

7-11. What type of nuclear radiation is emitted over a long period of time, extending to days and years?

1. Thermal
2. Initial
3. Ionized
4. Residual

7-12. The size or energy yield of nuclear weapons is rated in terms of the amount of what other explosive required to release an equal amount of energy?

1. Nitroglycerine
2. TNT
3. Gunpowder
4. C4 plastic

7-13. A 1-megaton nuclear warhead is a weapon capable of releasing an amount of energy equal to the energy released by 1 million tons of what type of explosive?

1. Nitroglycerine
2. C4 plastic
3. Gunpowder
4. TNT

7-14. Which of the following factors has a major influence on the relative effect of a nuclear burst?

1. Humidity
2. Location
3. Air temperature
4. Delivery vehicle

7-15. The five classifications of nuclear detonations include airburst, high-altitude burst, surface burst, underwater burst, and underground burst.

1. True
2. False

7-16. An airburst is a burst where the fireball does not touch the surface of the earth and the detonation is below what altitude?

1. 130,000 feet
2. 120,000 feet
3. 110,000 feet
4. 100,000 feet

7-17. The important effects of high-altitude bursts are damage to weapons systems or satellites operating in the upper atmosphere or in space and interference with radar emissions and communications.

1. True
2. False

7-18. A surface burst produces initial nuclear radiation around surface zero (SZ) and residual nuclear radiation around SZ and downwind from SZ.

1. True
2. False

7-19. Transit radiation is airborne radioactive material (base surge/fallout) whereas deposit radiation is radioactive material (base surge/fallout) that settles on exposed surfaces.

1. True
2. False

7-20. For a given weapon yield, greater hull and machinery damage to a ship will be produced by shock from what type of nuclear burst?

1. Air
2. Surface
3. High altitude
4. Underwater

7-21. Water waves produced by an underwater burst should not be a major hazard to ships except in shoaling waters.

1. True
2. False

7-22. An underwater nuclear burst produces underwater shock and a water plume which then causes the formation of

1. a thunderstorm
2. an undertow
3. a base surge
4. a tornado

Learning Objective: Recall the different types of effects resulting from nuclear bursts.

7-23. The shock wave created by a nuclear air burst initially travels outward at a velocity that is approximately how many times the speed of sound?

1. Five
2. Six
3. Seven
4. Eight

7-24. Aircraft, masts, antennas, and exposed personnel are vulnerable to what type of overpressure from a nuclear air burst?

1. Static
2. Fixed
3. Dynamic
4. Rigid

7-25. Which of the following targets are more likely to sustain severe damage from the static overpressure from a nuclear airburst?

1. Radar and radio antennas
2. Ship structures and buildings
3. Airplanes and helicopters
4. Exposed personnel

7-26. Serious injuries to personnel result when overpressure from a nuclear air burst reach what level, in pounds per square inch?

1. 1
2. 2
3. 3
4. 5

7-27. The shock wave from an underwater nuclear burst produces rapid acceleration of a ship. This action can disarrange equipment and machinery, rupture hulls, and/or injure personnel.

1. True
2. False

7-28. Four factors determine if the greater damage to a ship will be caused by the direct shock wave or from the reflected shock wave produced by an underwater nuclear burst. Which of the following is NOT one of these factors?

1. Bottom configuration and structure
2. Ocean wave formations
3. Depth of water
4. Distance from burst

7-29. The reflected shock wave produced by a nuclear airburst disperses in a nearly vertical direction. This movement is very effective in producing the vertical motions that can severely damage a ship.

1. True
2. False

7-30. Where the sea bottom is essentially flat, the strength of a reflected wave from a nuclear underwater burst will depend on the bottom structure. What type of bottom structure produces the greater wave strength?

1. Mud
2. Sand
3. Rock
4. Silt

7-31. Thermal radiation from the nuclear fireball of a 1-MT warhead lasts for how many seconds?

1. 2 to 3
2. 4 to 5
3. 6 to 7
4. 8 to 9

7-32. When fog, haze, and clouds are above a nuclear burst and the target area, a significant amount of thermal radiation is reflected downward. This action increases the severity of burns received by personnel.

1. True
2. False

7-33. Which of the following particles is not one of the four basic types of nuclear radiation produced by a nuclear explosion?

1. Alpha particles
2. Beta particles
3. Gamma rays
4. Photons

7-34. What two forms of nuclear radiation have strong penetrating power and cause similar injuries to people?

1. Alpha and beta particles
2. Alpha and gamma rays
3. Gamma rays and neutrons
4. Neutron rays and beta particles

7-35. What term identifies radioactive material that has been deposited where it is not wanted and presents a hazard to personnel?

1. Alpha material
2. Radioactive contamination
3. Fission fallout
4. Fusion debris

7-36. Atmospheric ionization around a nuclear airburst above 100,000 feet can disrupt radio and radar signals for several hours.

1. True
2. False

7-37. What effect from a nuclear burst produces large currents in cables and long-lead wires that can burn out electronic and electrical equipment?

1. Ionization
2. Radioactive water
3. Thermal nuclear radiation
4. Electromagnetic pulse (EMP)

7-38. Initial nuclear radiation is that radiation emitted by the fireball and the cloud during the first minute after detonation.

1. True
2. False

7-39. What is the primary reason that fallout of any kind is a major hazard?

1. Because it emits alpha rays
2. Because it emits dangerous gases
3. Because it emits gamma rays
4. Because it causes minor burns

7-40. The militarily significant fallout, often called early fallout, is usually deposited in less than how many hours in an area downwind of the detonation site?

1. 60
2. 48
3. 36
4. 24

7-41. For approximately how long after the initial burst is the base surge highly contaminated with fission products, making it a source of intense transit radiation?

1. 90 minutes
2. 60 minutes
3. 30 minutes
4. 15 minutes

7-42. What classification is given to personnel unable to man a battle station because of an injury resulting from a nuclear blast?

1. Combat casualties (CCs)
2. Combat ineffectives (CIs)
3. Battle wounded (BWs)
4. Combat excused (CEs)

7-43. Underwater shock produces injury among topside and below-deck personnel by the rapid upward movement of the deck.

1. True
2. False

7-44. Direct burns are often called flash burns because the flash of thermal radiation from the fireball produces them.

1. True
2. False

Learning Objective: Recall the different types of RADIAC and dosimeter instruments and their design limitations.

7-45. What types of instruments are used on ships to detect and measure radiation?

1. Radiation, detection, indication, and counting (RADIAC)
2. Radiation, detection, identification, and computation (RADIAC)
3. Radiation, detection, indication, and control (RADIAC)
4. Radiation, detection, indication, and computation (RADIAC)

7-46. Nuclear radiation once present cannot be detected by any of the five senses.

1. True
2. False

7-47. Detailed information on RADIAC instruments is contained in *NSTM*,

1. chapter 060
2. chapter 070
3. chapter 080
4. chapter 090

7-48. The intensity of the radiation field and the total dose or quantity of radiation received per exposure or time interval are essential information when considering the effects of radiation on personnel.

1. True
2. False

7-49. The intensity of radiation is expressed as roentgens per hour or as rads per hour.

1. True
2. False

7-50. Radiation dosage is expressed in two values: the exposure dose measured in roentgens, and the absorbed dose that is measured in what units?

1. Newtons
2. Joules
3. Rads
4. Microns

7-51. What device provides the information necessary to calculate the approximate length of time personnel can safely remain in a radiological contaminated area?

1. RADIAC meter
2. Survey meter
3. Dosimeter
4. Radiation meter

7-52. What device measures the total radiation received by an individual?

1. RADIAC meter
2. Survey meter
3. Dosimeter
4. Radiation meter

7-53. What survey RADIAC device is capable of detecting beta and gamma radiation simultaneously when the beta shield is removed?

1. AN/PDR-65
2. AN/PDR-27
3. DT-60/PD
4. IM-9PD

7-54. The RADIAC meter for what unit is installed on the bridge with one or more auxiliary readouts located in DCC and other prime locations?

1. AN/PDR-43 survey meter
2. AN/PDR-27 survey RADIAC
3. AN/PDR-65 RADIAC set
4. IM-9PD dosimeter

7-55. The DT-60/PD is a gamma radiation dosimeter that has what usable range, in rads?

1. 10 to 600
2. 20 to 700
3. 30 to 750
4. 40 to 800

7-56. The CP-95A/PD is a RADIAC computer-indicator that is used to read the amount of radiation a DT-60/PD has been exposed to.

1. True
2. False

7-57. What RADIAC instrument is primarily a health-physics device that is particularly useful in areas of low dose rates?

1. IM-45/PD
2. IM-22/PD
3. IM-143/PD
4. IM-9/PD

7-58. What dosimeter device is used by repair locker personnel that are involved with the survey, monitoring, and decontamination details during CBR evolutions?

1. IM-45/PD
2. IM-22/PD
3. IM-143/PD
4. IM-9/PD

7-59. What device is used to reset the self-reading dosimeters to zero?

1. IM-1246D/PD dosimeter charger
2. DT-2216C/PD dosimeter charger
3. CP-3326B/PD dosimeter charger
4. PP-4276A/PD dosimeter charger

7-60. Most RADIAC instruments are capable of detecting and measuring beta and gamma radiation at the same time.

1. True
2. False

7-61. RADIAC equipment aboard ship is inspected as required by the

1. *NSTM*, chapter 44
2. *NSTM,* chapter 70
3. *Ships' Maintenance and Material Management (3-M) Manual*
4. *Ships' RADIAC PMS Manual*

7-62. Some RADIAC instruments have high voltage electronic circuits and some contain radioactive material. Each of these factors presents a potential hazard when the instruments are disassembled.

1. True
2. False

Learning Objective: Recall the different types of radiological surveys.

7-63. What type of radiological survey is performed immediately after the cessation of fallout?

1. Rapid external
2. Supplementary
3. Rapid internal
4. Detailed

7-64. What type of radiological survey is performed to obtain precise radiation levels at topside vital stations and at contaminated areas that are irradiating internal vital stations?

1. Detailed
2. Supplementary
3. Rapid internal
4. Rapid external

7-65. What type of radiological survey is conducted to confirm or revise stay time calculations?

1. Rapid external
2. Supplementary
3. Rapid internal
4. Detailed

7-66. Team members must remember that accuracy is more important than speed when they are conducting what type of survey?

1. Rapid external
2. Supplementary
3. Rapid internal
4. Detailed

Learning Objective: Recall the different types of radiological exposure control.

7-67. A half-thickness is the amount of a specific protective shielding material necessary to cut down the amount of radiation to one-half of its original value.

1. True
2. False

7-68. With each additional half-thickness shield of protective material, you reduce the remaining radiation by what percentage?

1. 80
2. 70
3. 60
4. 50

7-69. Which of the following material provides the greatest amount of protective shield against radiation?

1. Wood
2. Steel
3. Earth
4. Concrete

7-70. Each ship shall designate deep shelter for each battle station in the ship's CBR defense bill.

1. True
2. False

Learning Objective: Recall the requirements for personnel in execution of the decontamination process and the two types of decontamination stations.

7-71. Much of the contamination that results from a nuclear weapon detonation can NOT be removed with soap and water or by brushing.

1. True
2. False

7-72. Detailed information about decontamination stations is contained in what *NSTM* chapter?

1. 010
2. 050
3. 070
4. 080

7-73. All personnel exposed to the weather while a ship is receiving fallout from a nuclear detonation must enter the ship through a decontamination station or a contamination control area (CCA).

1. True
2. False

7-74. Decontamination stations that are not associated with a CPS are referred to as

1. emergency decon stations
2. conventional decon stations
3. supplementary decon stations
4. auxiliary decon stations

7-75. Ships that have a CPS with total protection (TP) zones have how many compartment decon stations in each zone that have access to the weather decks?

1. One
2. Two
3. Three
4. Four

ASSIGNMENT 8

Textbook Assignment: "Ship Stability and Buoyancy," and " Shipboard Damage Control Training," chapters 12 and13.

Learning Objective: Recall the basic functions of trigonometry, the terminology used for ship stability, the effects of buoyancy and gravity on ship stability, and the effects of weight shifts on ship stability.

8-1. Detailed information on ship stability and buoyancy are contained in the *Naval Ships' Technical Manual (NSTM)*, chapter 079, volume 1, and chapter 096.

1. True
2. False

8-2. What trigonometric functions are used to compute data on ship stability?

1. Secant and cosecant
2. Secant and cotangent
3. Secant, cosecant, and cotangent
4. Sine, cosine, and tangent

8-3. The sine of an angle θ, abbreviated as sin θ, is the ratio expressed when the side of a right triangle adjacent to the angle θ is divided by the hypotenuse.

1. True
2. False

8-4. At 90°, what does sin θ equal?

1. 1
2. 2
3. 3
4. 4

8-5. The cosine is the ratio expressed by dividing the side adjacent to the angle θ by the hypotenuse.

1. True
2. False

8-6. The tangent of the angle θ is the ratio expressed by dividing the side opposite the angle θ to the hypotenuse.

1. True
2. False

8-7. Which of the following physics terms is NOT relative to ship stability?

1. *Volume*
2. *Density*
3. *Center of gravity*
4. *Kinetic energy*

8-8. Which of the following formulas is NOT correct?

1. Moment of the couple = F x d
2. Weight = V x d
3. Volume of displaced seawater = 35W
4. Righting moment = W x d^2

8-9. What is the weight of 70 cubic feet of seawater, in long tons?

1. 5
2. 2
3. 3
4. 4

8-10. The center of gravity is the point at which all the weights of the unit or system are considered to be concentrated and have the same effect as that of all the component parts.

1. True
2. False

8-11. The effect of the location of a force is known by what term?

1. *Inertial force*
2. *Force factor*
3. *Force multiplier*
4. *Moment of force*

8-12. A special case of moments occurs when two equal and opposite forces not in the same line rotate a body. What term describes this system of forces?

1. *Pair*
2. *Twin*
3. *Couple*
4. *Complex*

8-13. What part of the ship is used as the axis for calculating a vertical moment?

1. Stern
2. Superstructure
3. Bow
4. Baseline or keel

8-14. The weight of a ship is generally referred to as displacement, meaning the weight of the volume of water displaced by the hull.

1. True
2. False

8-15. What is the formula for determining displacement?

1. V = 15W
2. V = 20W
3. V = 35W
4. V = 40W

8-16. The volume of the watertight portion of the ship above the waterline is known by what term?

1. *Displacement*
2. *Reserve buoyancy*
3. *Trimming moment*
4. F*reeboard*

8-17. The distance in feet from the waterline to the weather deck calculated at the midship section is known by what term?

1. *Draft*
2. *Displacement*
3. *Moment of trim*
4. *Freeboard*

8-18. A moment is the product of a force tending to produce a rotation about an axis times its distance from the axis.

1. True
2. False

8-19. The initial position of the metacenter is no use in the study of stability because it provides a reference point when the ship is upright and stable.

1. True
2. False

8-20. The distance from the center of buoyancy to the metacenter when the ship is on even keel is the

1. metacentric moment
2. metacentric height
3. metacentric diameter
4. metacentric radius

8-21. If the metacentric height of a ship is large, the righting arms that develop, at small angles of heel, will be large. Such a ship is “stiff” and will resist roll.

1. True
2. False

8-22. A large metacentric height is normally desirable for a ship; however, a smaller metacentric height is sometimes desirable for a slow, easy roll that allows for more

1. precise navigation
2. stable cargo storage
3. accurate gunfire
4. loose water space

8-23. Detailed information on the inclining experiment can be obtained from the *NSTM,*

1. chapter 016
2. chapter 026
3. chapter 096
4. chapter 099

Learning Objective: Recall the laws of physics and trigonometry used in determining stability and buoyancy of a ship and the effects of buoyancy, gravity, and weight shifts on ship stability.

8-24. A ship's center of buoyancy is at the geometric center of the ship's underwater hull.

1. True
2. False

8-25. The righting moment of a ship is equal to the ship's displacement times the ship's righting arm and is measured in what units of measurement?

1. Kilotons
2. Foot-tons
3. Pounds
4. Kilograms

8-26. What is the result called when a series of values for the ship's righting arm at successive angles of heel are plotted on a graph?

1. Righting arm arc
2. Stability curve
3. Seaman's curve
4. Buoyancy arc

8-27. A reduction in the size of the righting arm usually results in an increase in a ship's stability.

1. True
2. False

8-28. Righting arms and righting moments are increased as a result of increased displacement.

1. True
2. False

8-29. Trim is measured by the difference between the forward draft and the after draft.

1. True
2. False

8-30. The addition of loose water to a ship alters the stability characteristics by means of three effects that must be considered separately. They are: (1) the effect of added weight, (2) the effect of free surface, and (3) the effect of free

1. trim
2. draft
3. righting arm
4. communication

8-31. For most types of ships, the curves of form may be used without correction for trim provided the trim is less than what percent of the length of the ship?

1. 1
2. 2
3. 3
4. 4

8-32. The MOMENT TO CHANGE TRIM 1 INCH (MTI) is used as the standard measure of resistance to

1. righting inclination
2. vertical inclination
3. longitudinal inclination
4. optimum inclination

8-33. Longitudinal stability is the tendency of a ship to resist a change in what property?

1. Buoyancy
2. Free surface
3. Displacement
4. Trim

Learning Objective: Recall the organization and responsibilities of the damage control training team (DCTT) and the objectives of DCTT training.

8-34. The key to a successful training program is to develop a self-sustaining training capability in each ship through the use of onboard training teams.

1. True
2. False

8-35. Which of the following activities is NOT a training team function?

1. Initiating exercises
2. Developing drill packages
3. Ensuring safety rules are adhered to during exercises
4. Providing daily briefs to the executive officer

8-36. What is the total number of DCTTs that should be established aboard most ships?

1. Ten
2. Nine
3. Five
4. Four

8-37. What training team is required for LHA/LHD/LPH/MCS/LPD only?

1. Aviation Training Team (ATT)
2. Integrated Training Team (ITT)
3. Combat Systems Training Team (CSTT)
4. Engineering Casualty Control Training Team (ECTT)

8-38. Training teams must analyze problem areas or training deficiencies and initiate corrective actions to eliminate the possibility of personnel injury and damage to equipment.

1. True
2. False

8-39. A member of the DCTT does NOT normally hold which of the following positions?

1. Watch station evaluator
2. Safety observer
3. Team leader
4. Watch station supervisor

8-40. What person serves as the Chairman of the Planning Board for Training and as Team Leader of the DCTT?

1. Executive officer
2. Safety officer
3. Damage control assistant
4. Engineer officer

8-41. The duties of the DCTT coordinator include the

1. OMR process
2. RMP process
3. MOR process
4. ORM process

8-42. The team coordinator is responsible to what person for organizing all team training periods, developing training event plans, and making all preparations in support of the event execution?

1. OOD
2. Damage control assistant (DCA)
3. CIC
4. Executive officer

8-43 Trainers, evaluators, and safety observers directly observe individual and team performance of the training event and some may act as initiators.

1. True
2. False

Learning Objective: Recall the objectives and methods of damage control training.

8-44. The goal of damage control training is to organize individual and team training to ensure shipboard readiness.

1. True
2. False

8-45. An effective training program is based on a logical continuum of training, starting with basic knowledge/actions and progressing to more complex evolutions.

1. True
2. False

8-46. An effective training program includes classroom lectures and

1. documentary movies
2. case studies
3. schedule planning
4. intensive casualty drill scenarios

8-47. Which of the following activities is NOT one of the general objectives of damage control training?

1. Developing the ability to assess repair parties in all DC exercises
2. Developing the ability to set material conditions
3. Developing the ability to repair communications gear
4. Developing the ability to recognize unsafe actions and conditions

8-48. The specific damage control training objectives for the damage control assistant includes training in directing CBR defense postures.

1. True
2. False

8-49. Which of the following is a specific objective of the damage control training provided damage control repair parties?

1. training in evaluating damage and setting priorities for repair actions
2. exercising pipe patching, shoring, dewatering and plugging teams in hands-on drills
3. providing informal material deficiency assessment
4. training in communicating vital information to ship control stations

8-50. The specific responsibilities of the in-port DCTT for damage control training include

1. training on setting requirements for material condition YOKE
2. training in rescue and assistance
3. training CBR teams in proper monitoring and decontamination
4. providing informal material deficiency assessment

8-51. The specific responsibilities of damage control petty officers for damage control training include

1. training on setting requirements for material condition YOKE
2. training in rescue and assistance
3. training CBR teams in proper monitoring and decontamination
4. providing informal material deficiency assessment

8-52. What method of training discusses the basic parts, the functions of each part, and the operation of equipment with limiting parameters?

1. Demonstration
2. Case study
3. Lecture
4. Performance

8-53. Experience has proven that training scenarios provide a good means for training teams to conduct efficient exercises and drills, including integrated training.

1. True
2. False

8-54. Effective integrated scenario-based training exercises the ship as a complete system.

1. True
2. False

8-55. Designing and conducting scenarios that demonstrate cause-and-effect relationships between systems are the essence of integrated training.

1. True
2. False

8-56. A list of training props is presented in

1. OPNAV instructions
2. *NSTM* volumes
3. *ATG* publications
4. NAVSEA instructions

8-57. During all training evolutions the trainer must constantly monitor for safety hazards and practices and be ready to correct any discrepancies even if it means stopping training or a drill in process.

1. True
2. False

8-58. Afloat Training Groups (ATGs) provide most ships examples of

1. repair locker inspections
2. vector identification
3. damage control drills
4. ECCM procedures

8-59. Forces Afloat will comply with *Navy Safety Precautions for Forces Afloat*, OPNAVINST

1. 6200.19 series
2. 2500.19 series
3. 3300.19 series
4. 5100.19 series

8-60. The DCTT team member has the authority to STOP assigned watch stander/repair party personnel any time safety is jeopardized.

1. True
2. False

8-61. The DCTT team member must walk a fine line between allowing mistakes to be made and preventing unsafe conditions.

1. True
2. False

8-62. In the event of an injury, the DCCT member ensures the words *ACTUAL CASUALTY* are used and are passed to CCS. The EOOW should pass the word over the 1MC as follows: "Actual casualty (description), freeze the drill"; followed by additional instructions, if required.

1. True
2. False

8-63. For detailed information about shipboard training and development of scenarios, you should only refer to *NSTM,* chapter 555.

1. True
2. False

8-64. COMNAVSURFLANT/PACINST 3502.2E (SFTM) and OPNAVINST 3120.32C (SORM) should never be used as sources for development of damage control training programs.

1. True
2. False

8-65. Self-simulation shall be used by the watch stander to prevent inadvertent activation of damage control equipment during drills.

1. True
2. False