NOTE

Chapter 24 contains emergency rescue and mishap response information for the following aircraft:

USN	**T-2**
USN	**T-34C**
USN	**T-39C**
USN	**T-44**
USN	**T-45A**

CHAPTER 24

U.S. NAVY

TRAINER

AEROSPACE EMERGENCY RESCUE AND MISHAP RESPONSE INFORMATION

24-1. INTRODUCTION AND USE.

24-2. This section contains emergency rescue and mishap response information illustrations in alphanumerical order relative to type and model of aircraft. This arrangement of illustrations is maintained from Chapter 4 throughout the remainder of the publication.

24-3. GENERAL ARRANGEMENT.

24-4. Aircraft type designation has been positioned in the upper right corner of the horizontal illustration for rapid identification. Additional aids to rapid orientation are:

a. Recent technological advances in aviation have caused concern for the modern firefighter. Aircraft hazards, cabin configurations, airframe materials, and any other information that would be helpful in fighting fires, the locating and rescue of personnel will be added as the information becomes available.

b. Suggested special tools/equipment are listed in the upper left corner, on the Aircraft/Entry page of each listed aircraft.

c. Procedural steps covering emergency/normal entrances, cut-ins, engine/APU shutdown, safetying ejection/escape systems, and aircrew extraction are outlined on the left side of each page with coordinated illustrations on the right.

d. Illustrations located on right side of pages are coordinated with text by numerals and small letters depicting both paragraph and subparagraph on the page.

e. Each illustration is consistently colored and/or pattern keyed to highlight essential emergency rescue information.

f. Details are pulled directly from the illustration to highlight an area, thus eliminating unnecessary searching for desired information.

AIRCRAFT DIMENSIONS

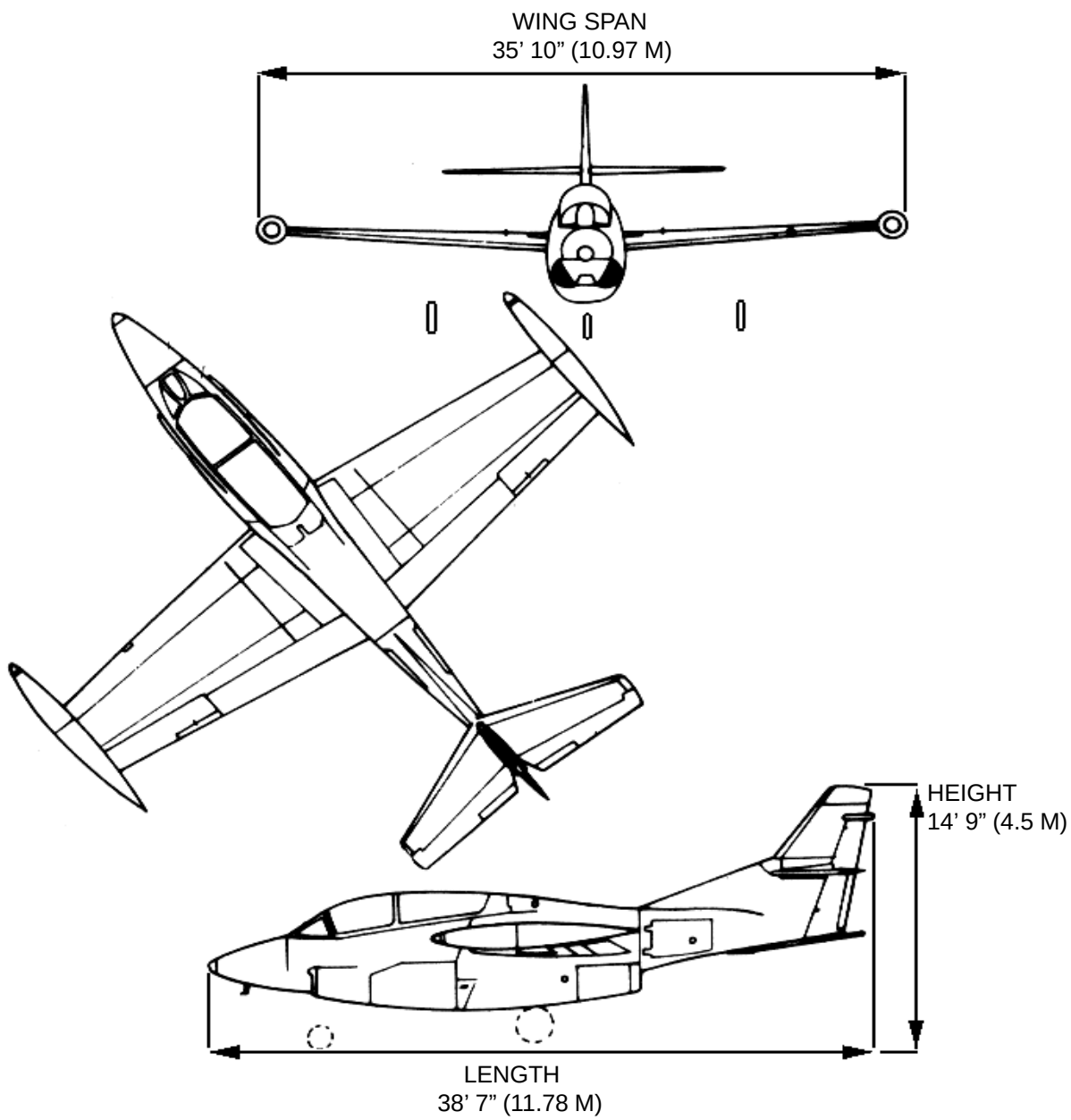

AIRCRAFT HAZARDS

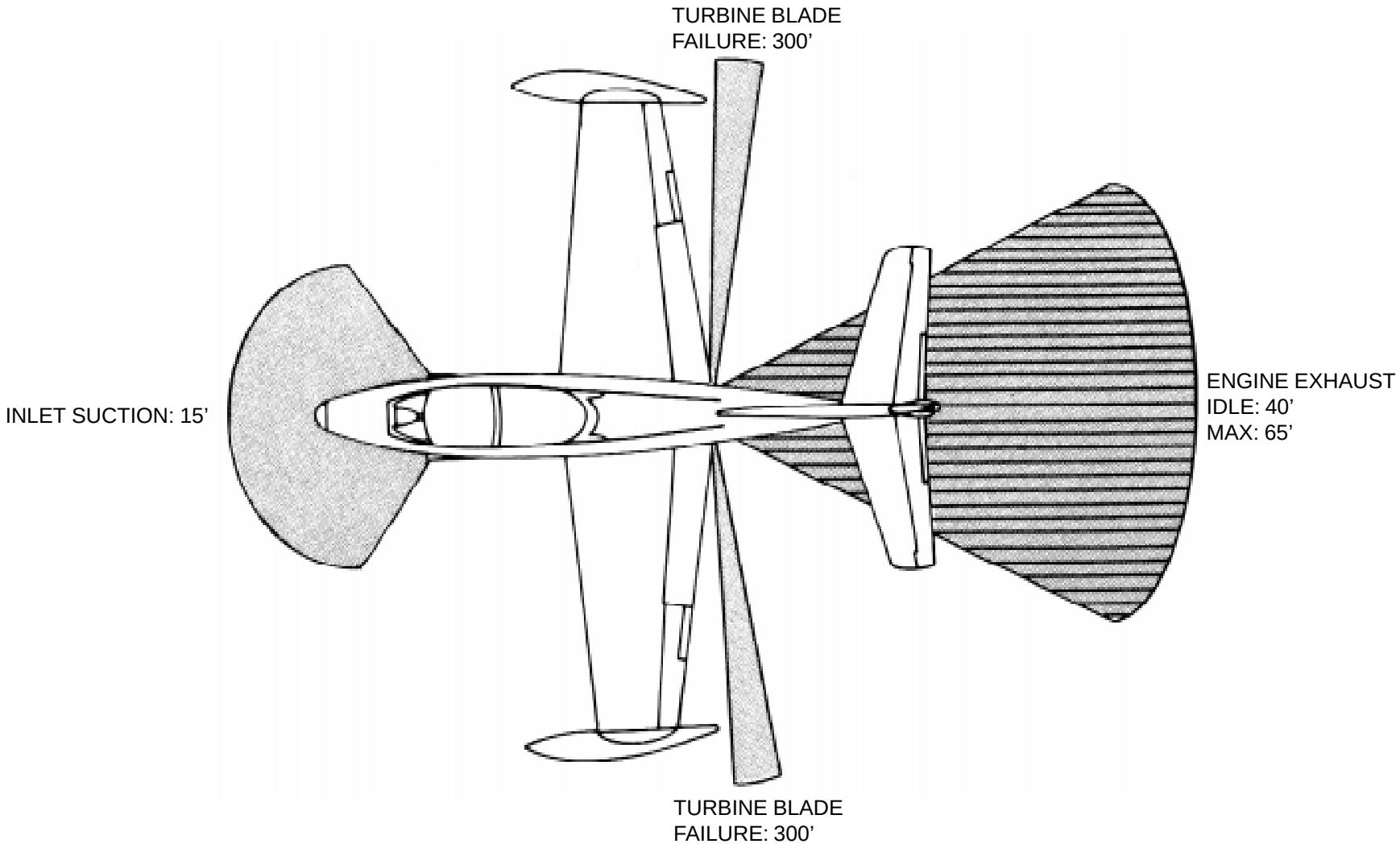

AIRCRAFT HAZARDS-Continued

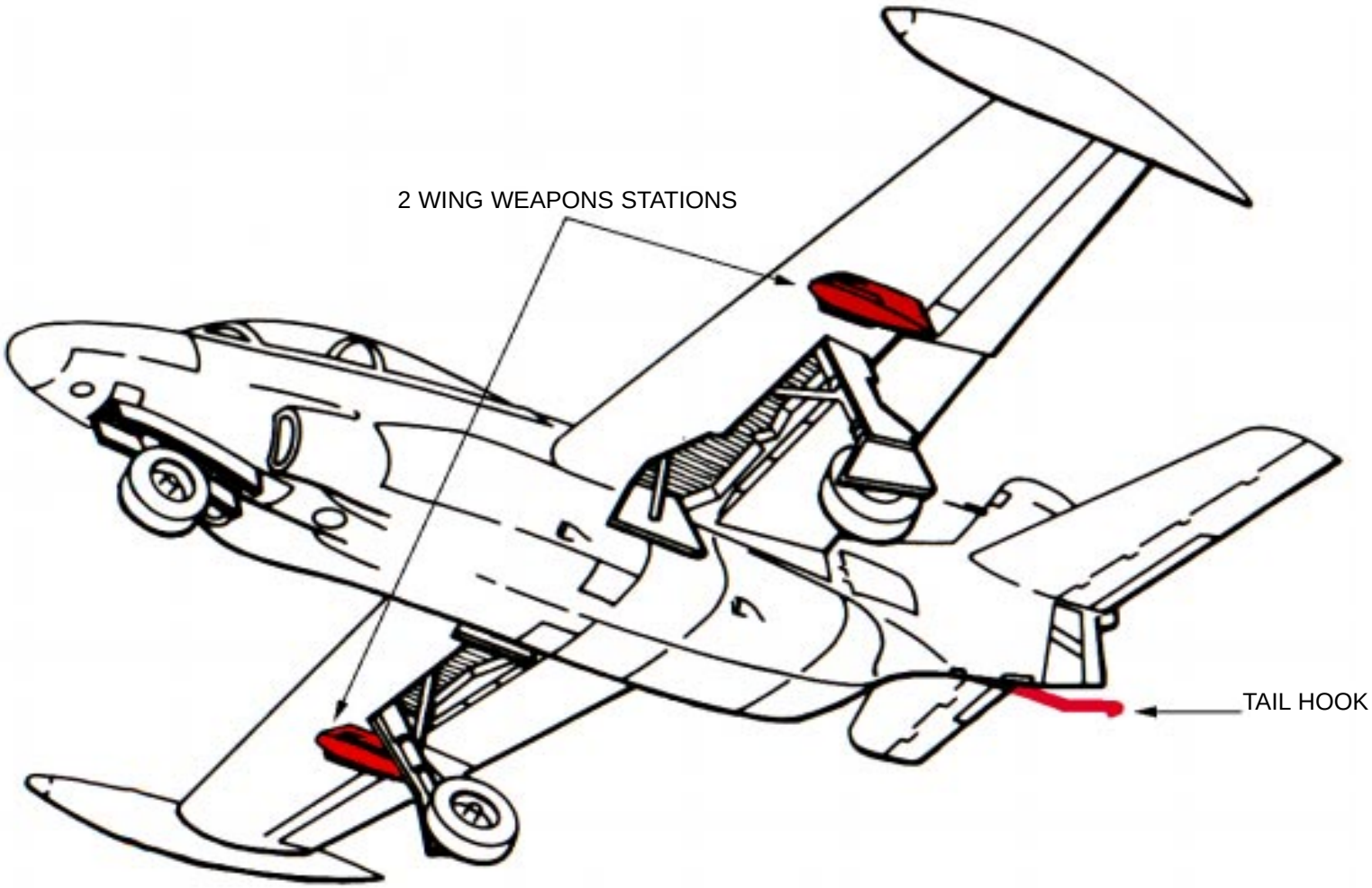

AIRFRAME MATERIALS

LEGEND

- ALUMINUM
- STEEL
- OTHER FIBERGLASS

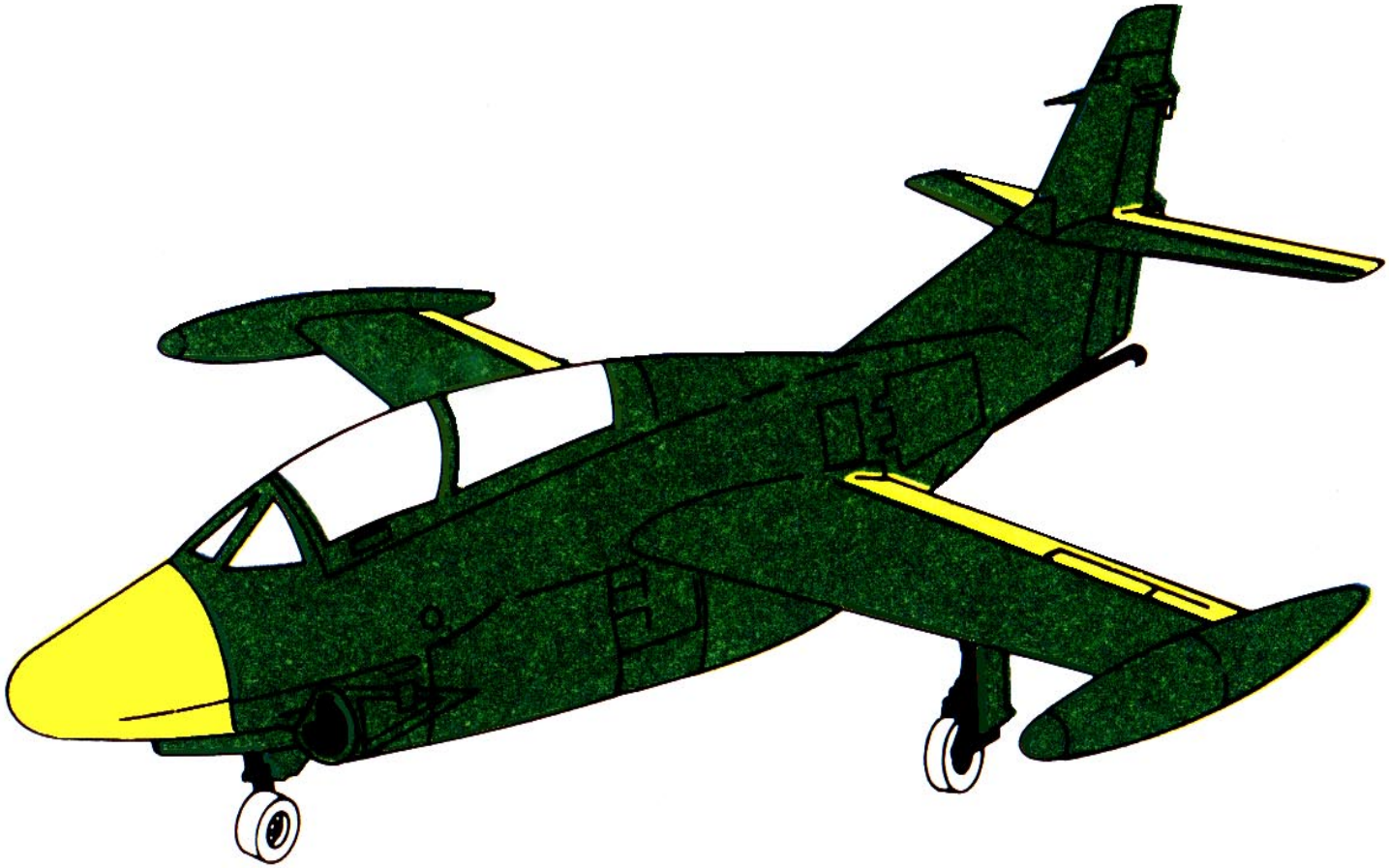

SPECIAL TOOLS/EQUIPMENT
Power Rescue Saw
Crash Ax

AIRCRAFT ENTRY

1. NORMAL ENTRY

a. An external electrical canopy switch, located on the left side of the fuselage opens the canopy vertically to full open position in 7 seconds.

WARNING

Do not actuate this switch for emergency entrance to cockpit. Use of electrical power can ignite fuel or other flammable material in damaged aircraft.

2. MANUAL ENTRY

NOTE:
Canopy weighs about 2000 pounds. Two rescue personnel will be required to lift canopy to maximum height.

a. Push button and pull left external canopy manual release handle full out (90 degrees).

b. Pull canopy aft about 1 inch to release internal latches.

c. Insure impact area is clear of personnel, then manually raise canopy until canopy falls off to either side.

3. EMERGENCY ENTRY

a. Insure impact area is clear of personnel, then pull external canopy jettison handle. Handle is located in circular panel on left side of fuselage.

4. CUT-IN/FORCED ENTRY

a. Canopy is made of acrylic plastic and may be cut with power rescue saw or crash ax. Cut along all 4 sides of canopy frame.

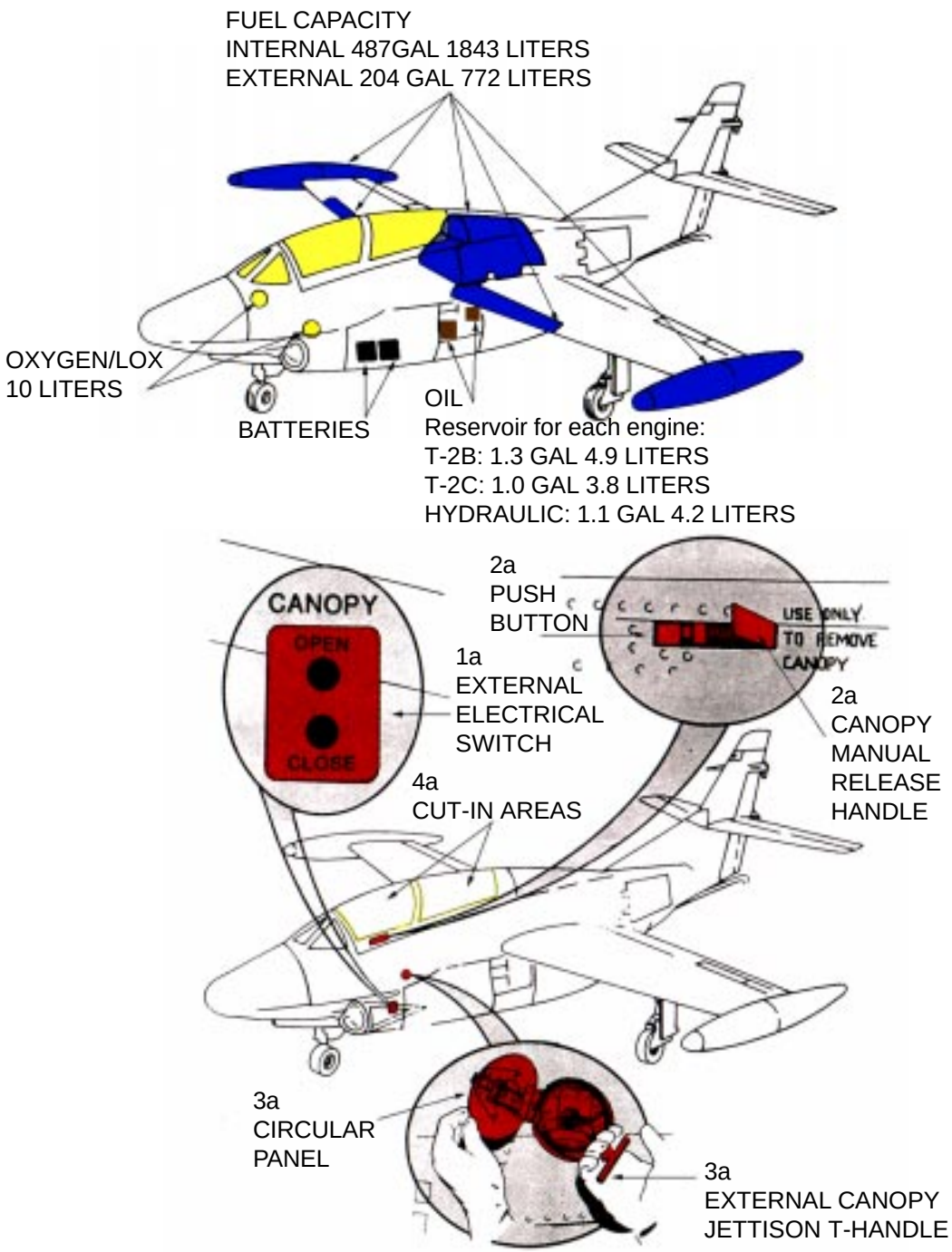

CANOPY SAFETY AND ENGINE SHUTDOWN

1. CANOPY SAFETY

a. To prevent accidental discharge of pneumatic canopy remover tube, install safety pins in the canopy release handle located in the forward left corner of each cockpit.

2. ENGINE SHUTDOWN

a. Depress PCL idle stop button if installed. Pull power control levers, located on left console, aft and around detent to FULL CLOSED position.

b. Place No. 1 and No. 2 engine master switches, located left console forward of power control levers in OFF position.

c. Place battery switch, located forward right console, in NORM position.

d. To externally disconnect the batteries, located in a access door forward left side of fuselage below the canopy. Batteries are equipped with quick disconnect plugs.

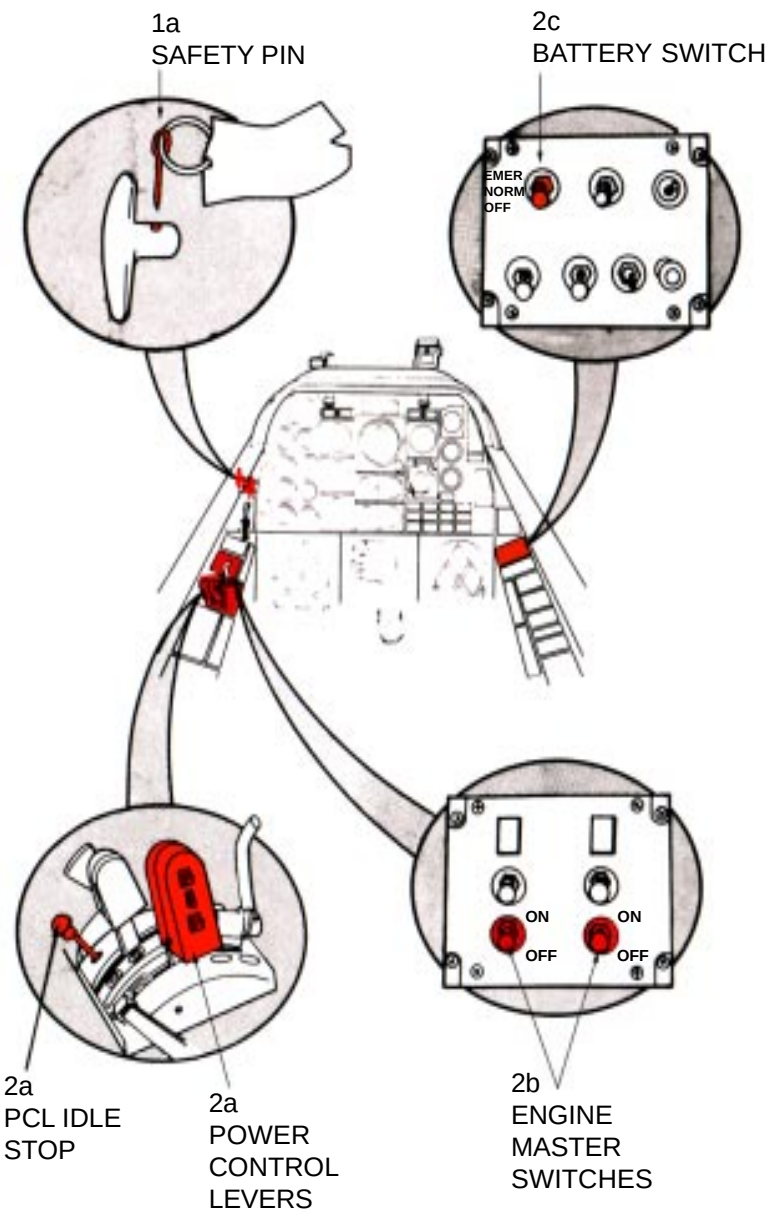

NORTH AMERICAN LS-1A EJECTION SEAT

1. GENERAL INFORMATION

The NORTH AMERICAN LS-1A is a catapult rocket ejection seat that provides support and necessary environmental equipment for crewmembers during flight, and a means of fast, safe escape during emer gency flight conditions. The ejection seat system will safely assure the sequenced escape of both pilots, from ground level at a minimum altitude and aircraft speed capability. The seat ejection system has the capability of a zero altitude-zero speed ejection only if the canopy is not on the aircraft.

The basic structure of the seat consists of aluminum, built to withstand high G-loads, support of all the components, and form the main framework for the seat.

The basic componets of the seat assembly include a catapult tube, rocket tube, ballistic operated inertia reel, seat bucket, parachute, and survival equipment.

This ejection seat presents definite hazards which may cause fatal injuries to uninformed and careless person nel. Firefighting/rescue personnel must become thoroughly familiar with the locations and the safetying of the seat components in both normal and emergency conditions.

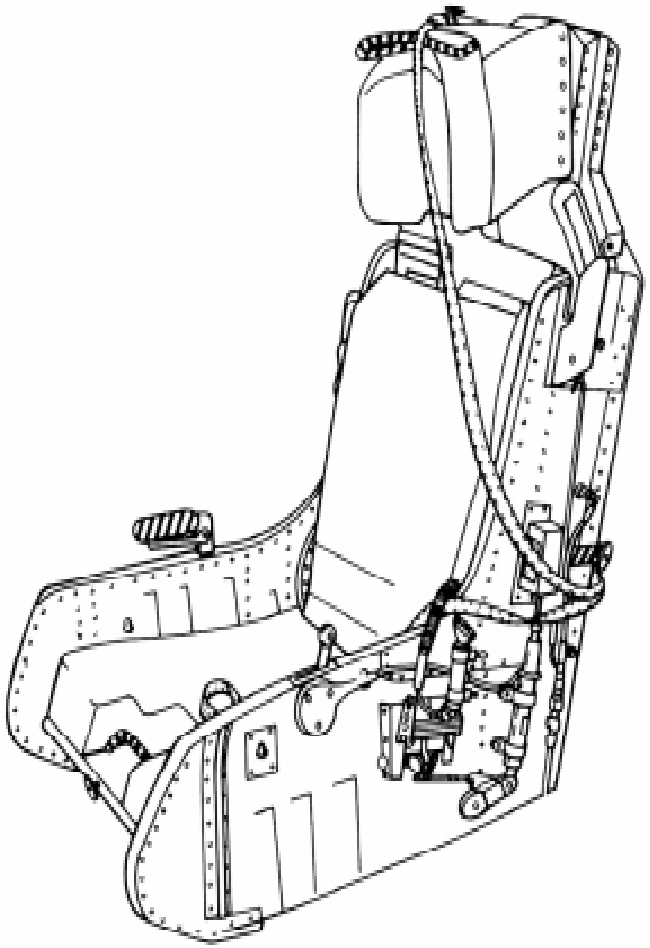

EJECTION SEAT SAFETYING

1. EJECTION SEAT SAFETYING-NORMAL AND EMERGENCY-NORTH AMERICAN LS-1A SEAT

NOTE:

Immediately upon gaining access to the aircraft cockpit, time permits and no hazardous conditions exist, proceed with seat safetying procedures.

a. Insert face curtain safety pin.

b. Insert lower ejection handle safety pin.

c. Insert striker bellcrank safety pin.

d. If safety pins are not available, break shear wires and disconnect seat initiator quick disconnects by pulling down on lower end of quick disconnect (on both sides of seat).

WARNING

In multi-seat aircraft, all ejection seats must be safetied due to command ejection possibility.

WARNING

When removing personnel from ejection seats, do not allow crewmembers or rescue personnel to become entangled in lower seat ejection handle or use face curtain handle as a support or hand hold.

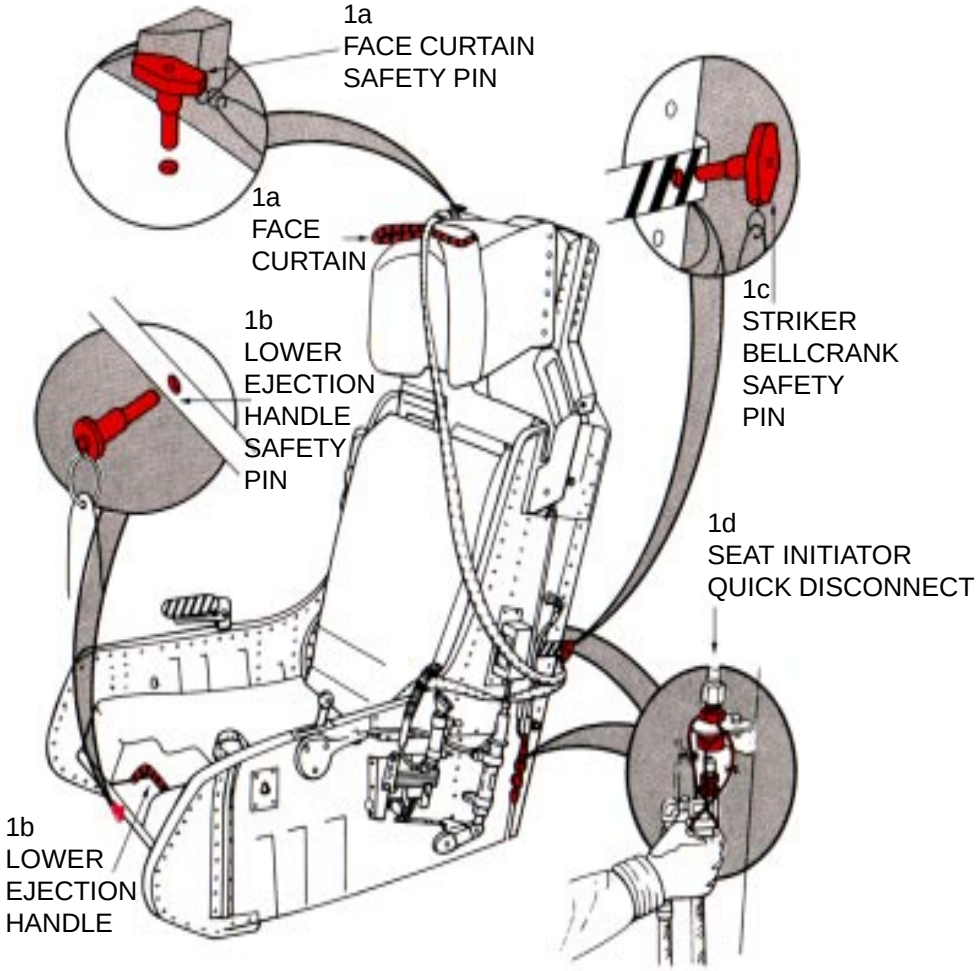

AIRCREW EXTRACTION

1. AIRCREW EXTRACTION

NOTE:
The crewmembers are attached to the seats by the use of integrated harness. Additionally, the oxygen/communication lead is attached to the survival kit. If crewmembers are wearing anti-G suits, a hose will be attached to the left side of the seat.

a. Remove oxygen mask by pulling down on release tabs on either side of helmet mask.

b. To disconnect oxygen/communication lead, pull up round collar and pull apart connection.

c. Grasp the anti-G suit hose and pull up from left seat fitting.

d. Release two lap belt, then two shoulder harness koch fittings.

e. Actuating the emergency harness release handle will free the crewmember from seat. However, the parachute and survival kit will remain attached to the crewmember. These items will have to be manually detached prior to extraction.

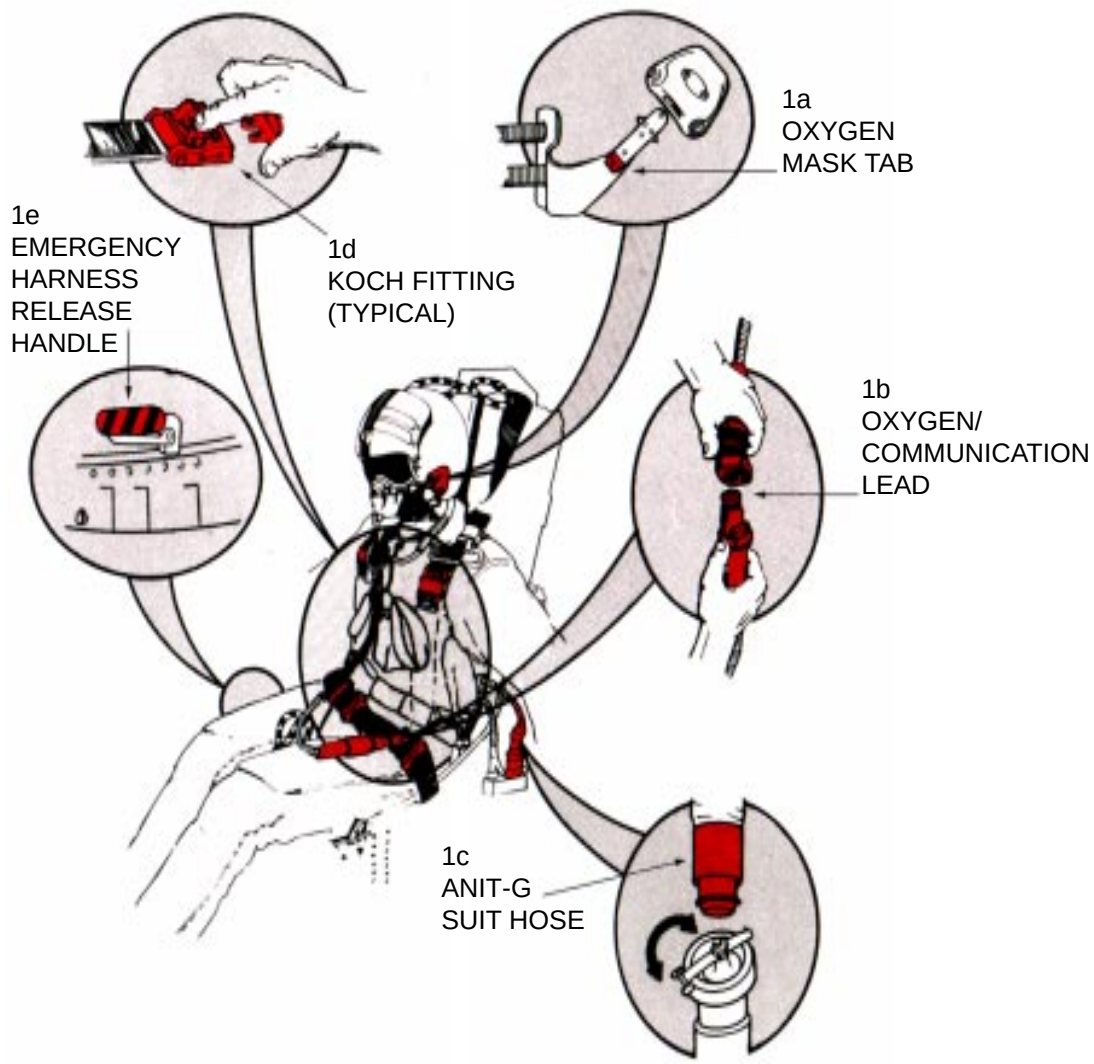

AIRCRAFT DIMENSIONS

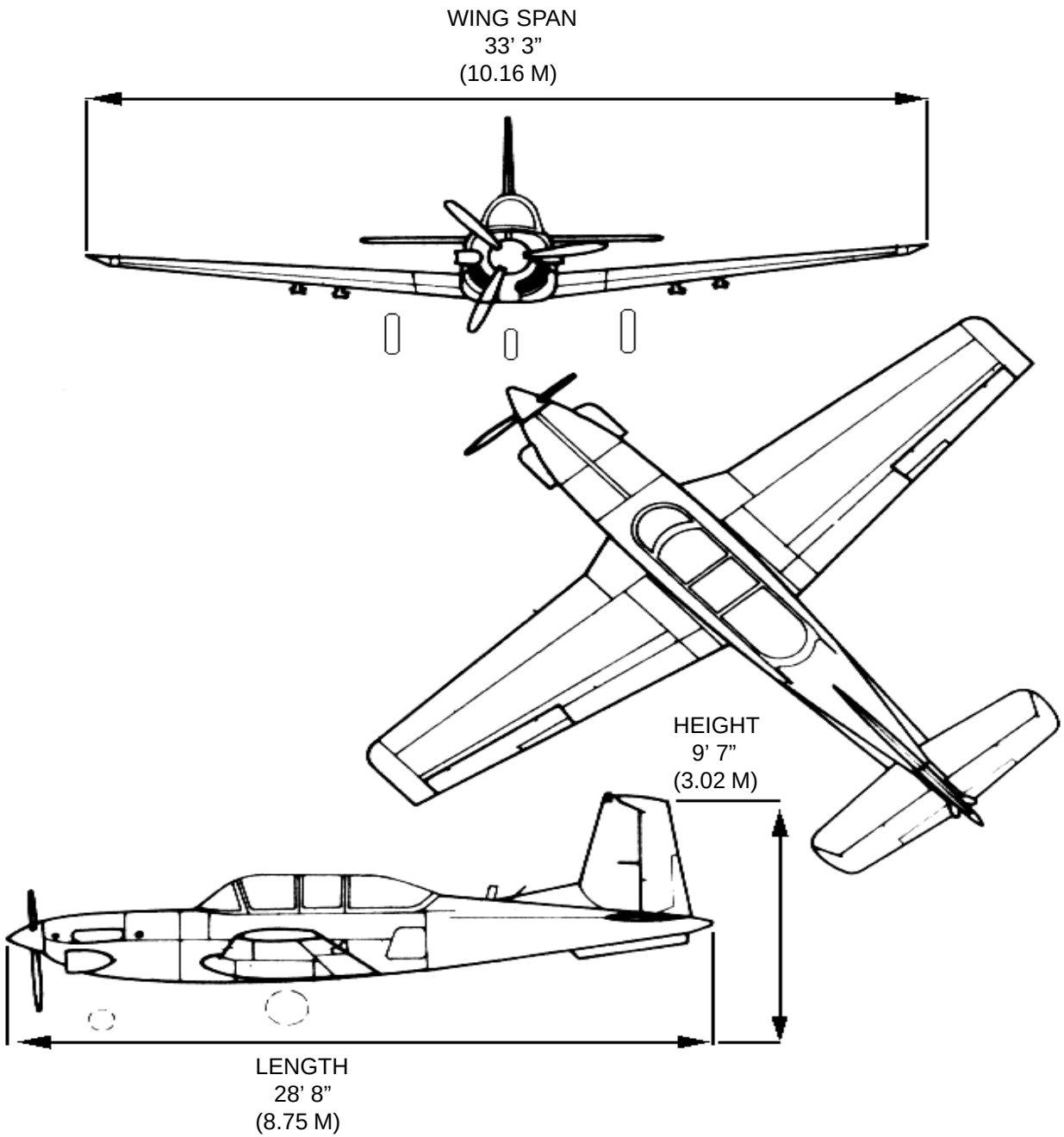

AIRCRAFT HAZARDS

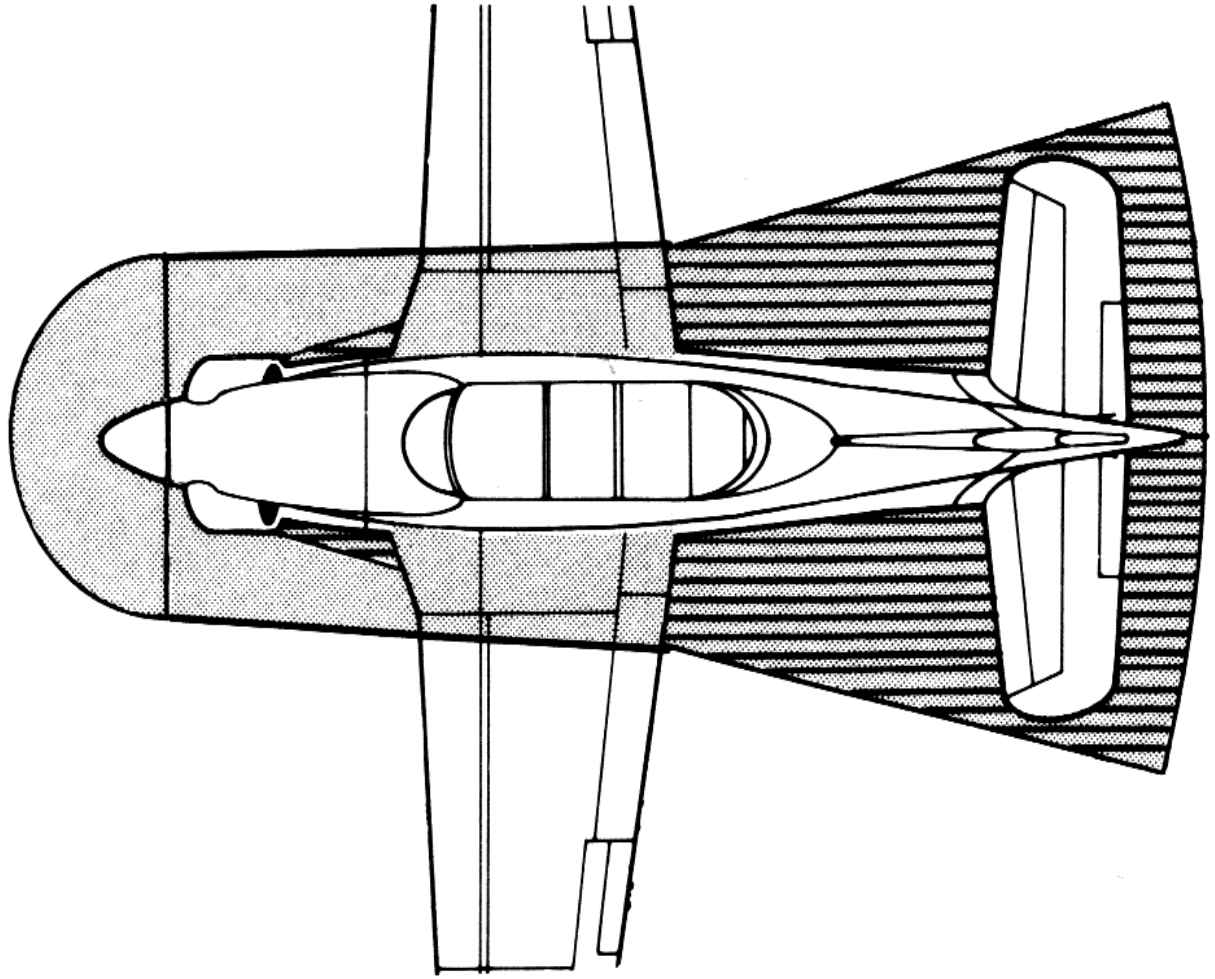

AIRFRAME MATERIALS

LEGEND

ALUMINUM

STEEL

OTHER
FIBERGLASS/MAGNESIUM

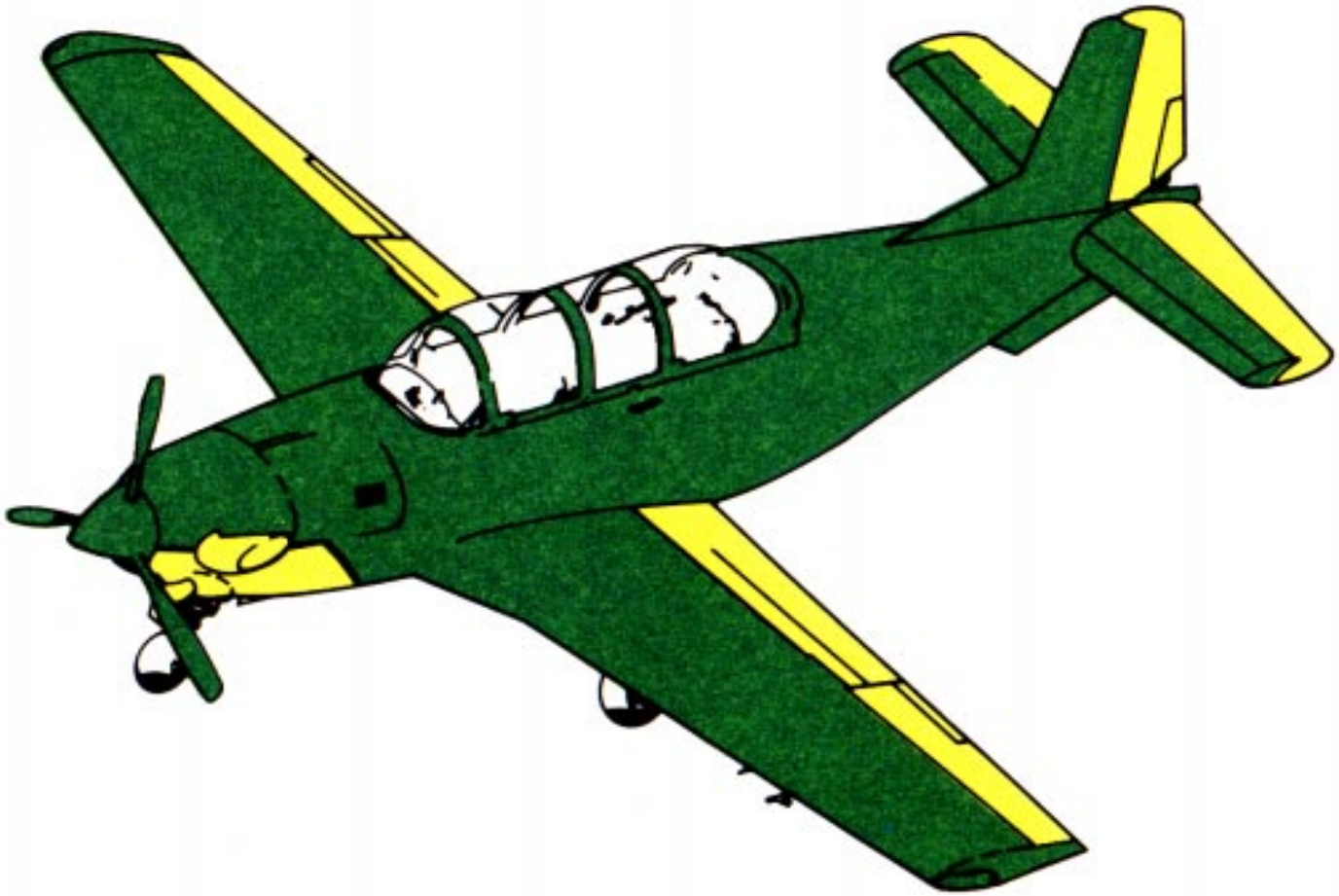

SPECIAL TOOLS/EQUIPMENT
Power Rescue Saw
Crash Ax

AIRCRAFT ENTRY

1. NORMAL ENTRY

a. Rotate canopy release handles, located on the left side of fuselage, clockwise.

b. Pull canopy sections aft with handles.

2. EMERGENCY ENTRY

a. Pull emergency canopy release handle, located on right forward fuselage marked with yellow rescue arrow, to release both sets of canopy rails from fuselage.

b. Remove canopies.

3. CUT-IN/FORCED ENTRY

a. Canopies are made of acrylic plastic. Cut around all four sides of canopy frames with power rescue saw or crash ax.

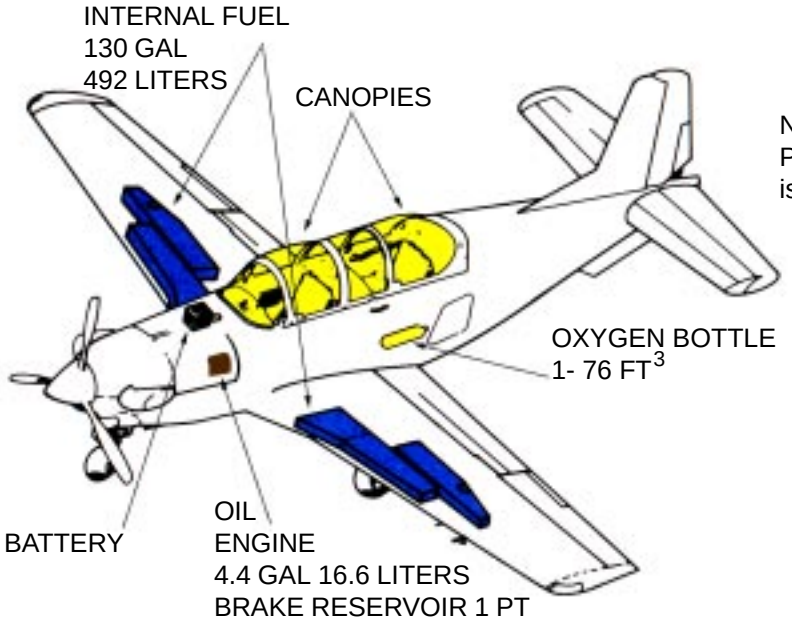

NOTE:
Pneumatic system is 3000 PSI.

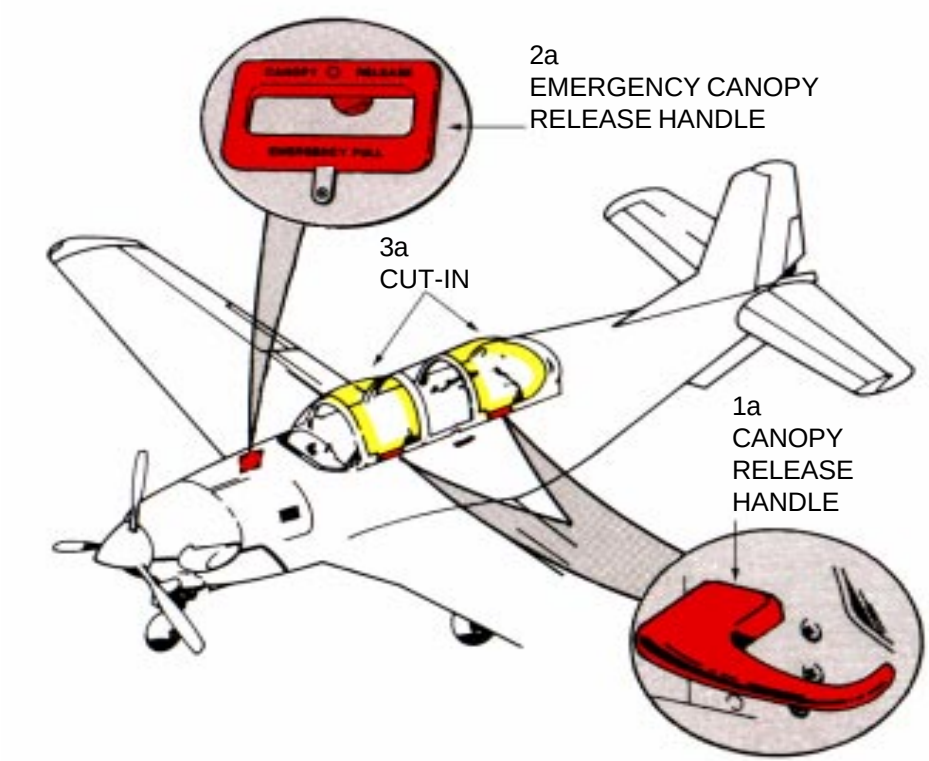

CANOPY SAFETY, ENGINE SHUTDOWN, AND BATTERY DISCONNECT

1. CANOPY SAFETY

a. The interior emergency canopy handle presents no hazard to rescue personnel. Insure that a metal clip holds the handle securely in place to prevent jettison.

2. ENGINE SHUTDOWN

a. Pull condition lever aft to OFF position.

b. Raise guard, pull up on emergency fuel shutoff handle.

c. Place battery switch in the OFF position.

3. BATTERY DISCONNECT

a. The battery is accessible through an access door on the right fuselage just forward of the canopy. The battery is equipped with a quick disconnect fitting. Disconnect, time permitting, if danger is imminent and cockpit switch is inaccessible.

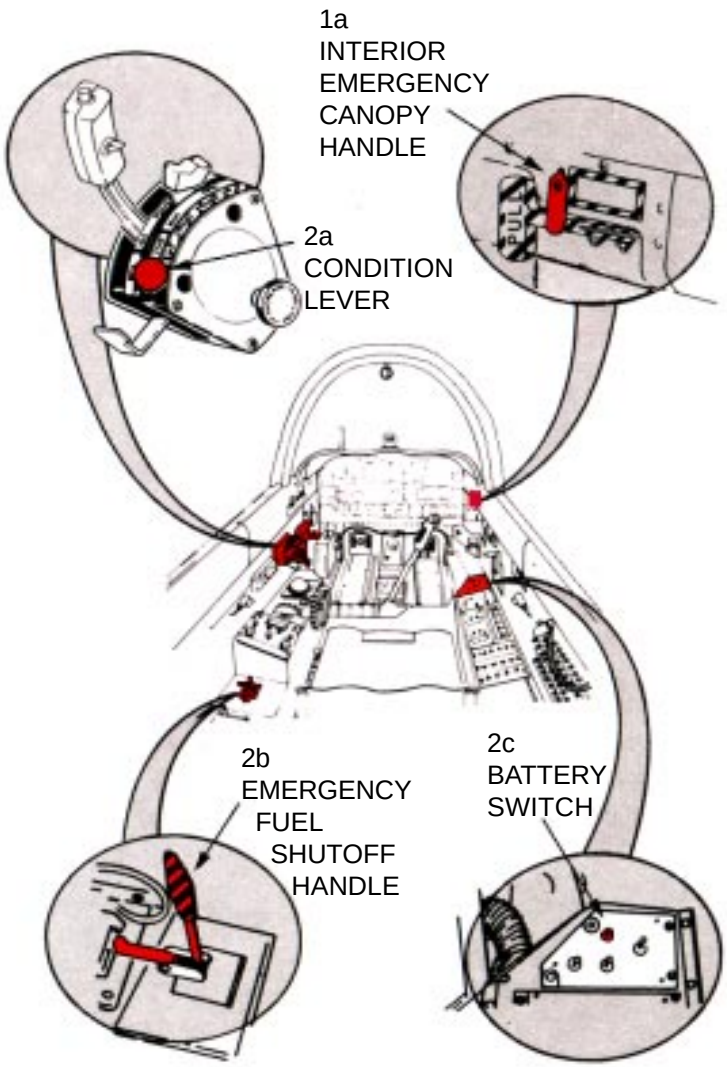

AIRCREW EXTRACTION

1. AIRCREW EXTRACTION

NOTE:
Pilot seats are equipped with shoulder harness, lap belts, and crotch straps utilizing a single five point quick disconnect buckle. Communication leads and oxygen hoses aare attached to the righ hand console and have quick disconnects. Crewmembers wear NB-6 backpack parachutes which have static lines attached to the left side of the seats with red spring clips.

a. Remove oxygen mask by pulling down on bayonet fittings on both sides of helmet mask.

b. Disconnect communication leads by pulling apart quick disconnect attached to left shoulder strap.

NOTE:
Position oxygen mask hose assembly to the right hand console to permit unobstructed path for extraction of crewmember.

c. Rotate single point buckle in either direction to release shoulder harness, lap belt, and crotch strap.

d. Pull out on three parachute ejector snap release levers, one on each leg and one on chest.

e. If parachute cannot be released, crewmember may be removed from aircraft with parachute attached. Release static line spring clip from left side of seat before removing crewmember.

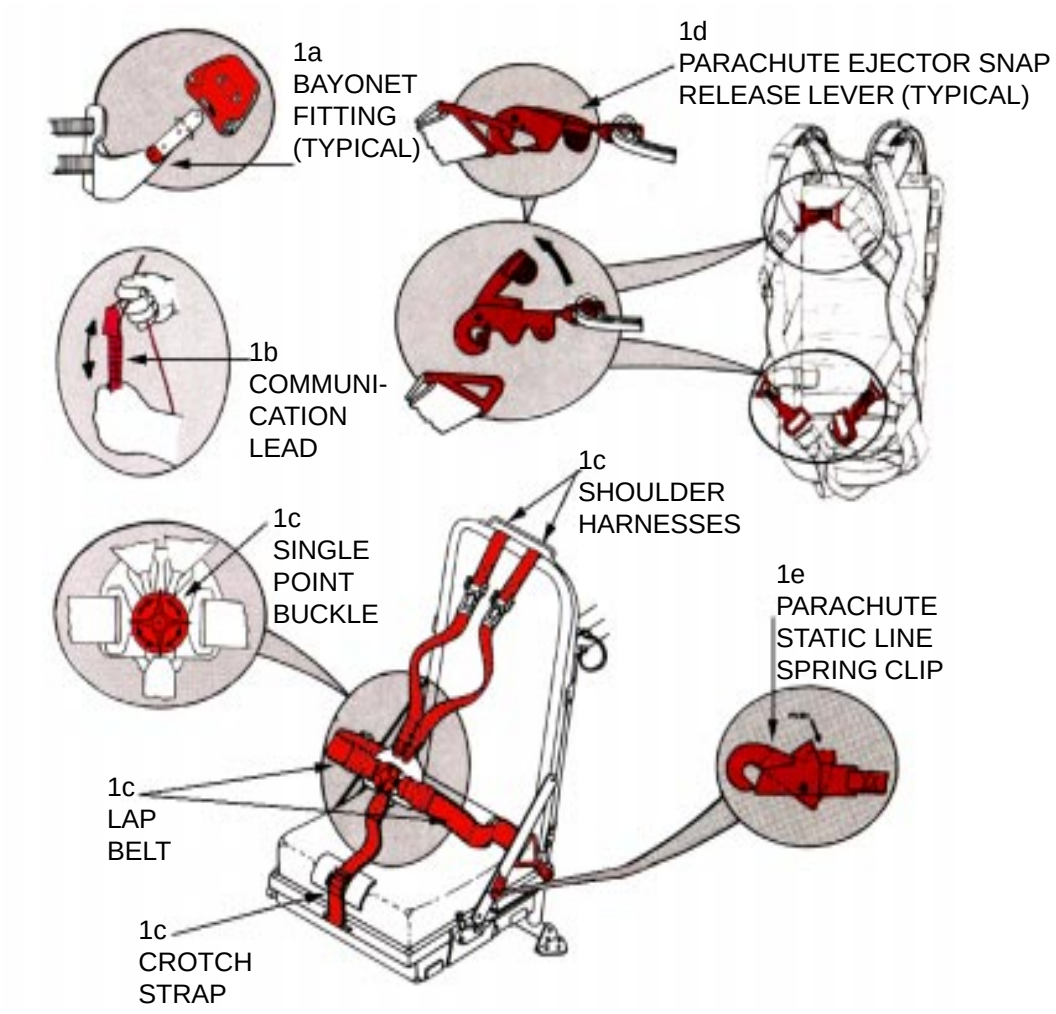

AIRCRAFT HAZARDS

NOTE:

The US Navy T-39 is the similar to the USAF T-39. Refer to Chapter 11, pages T-39.1 thru T-39.2. For additional information refer to the USAF T-39B and NT-39 on pages T-39.3 thru T-39.4.

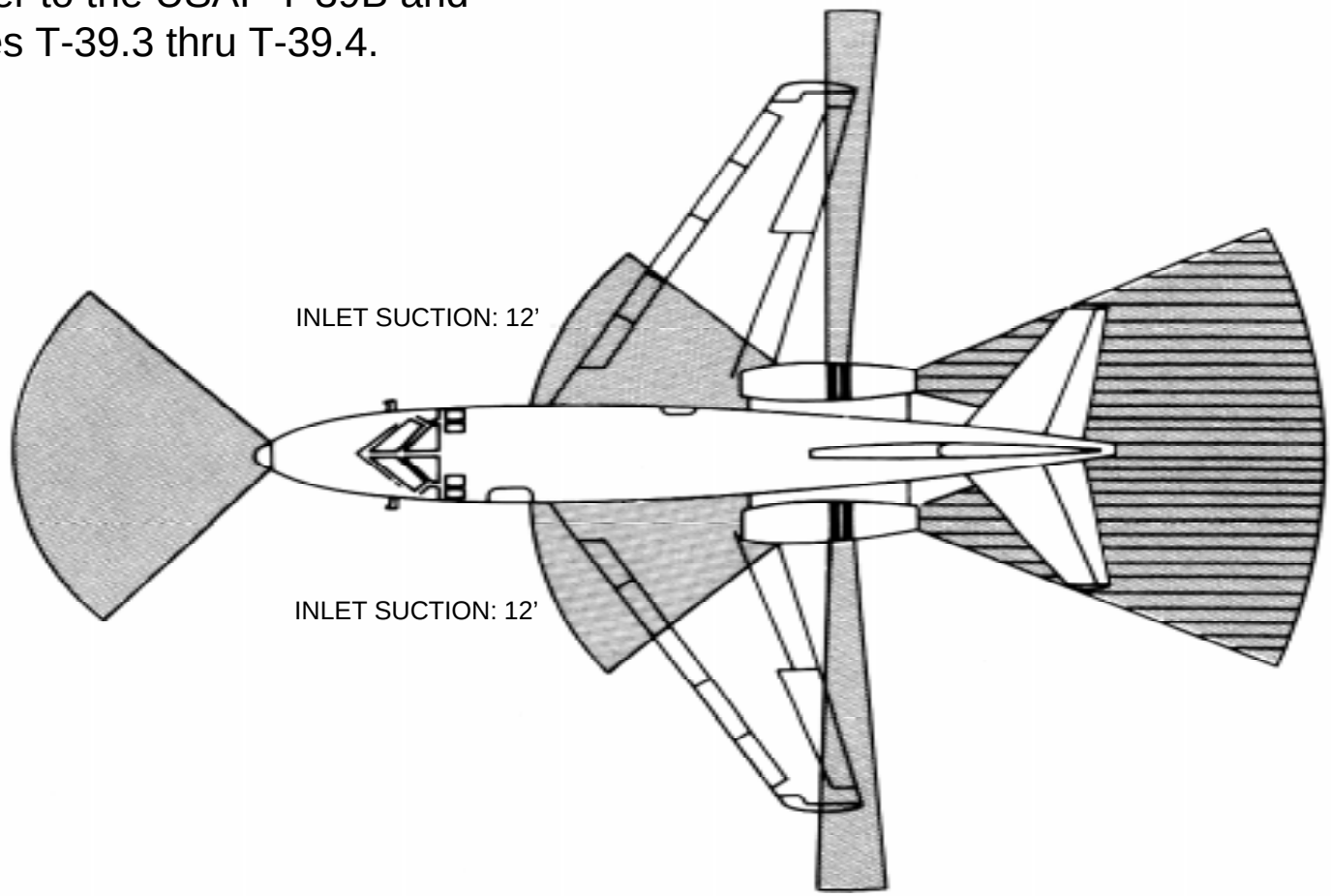

AIRFRAME MATERIALS

LEGEND

ALUMINUM

STEEL

OTHER
FIBERGLASS/MAGNESIUM

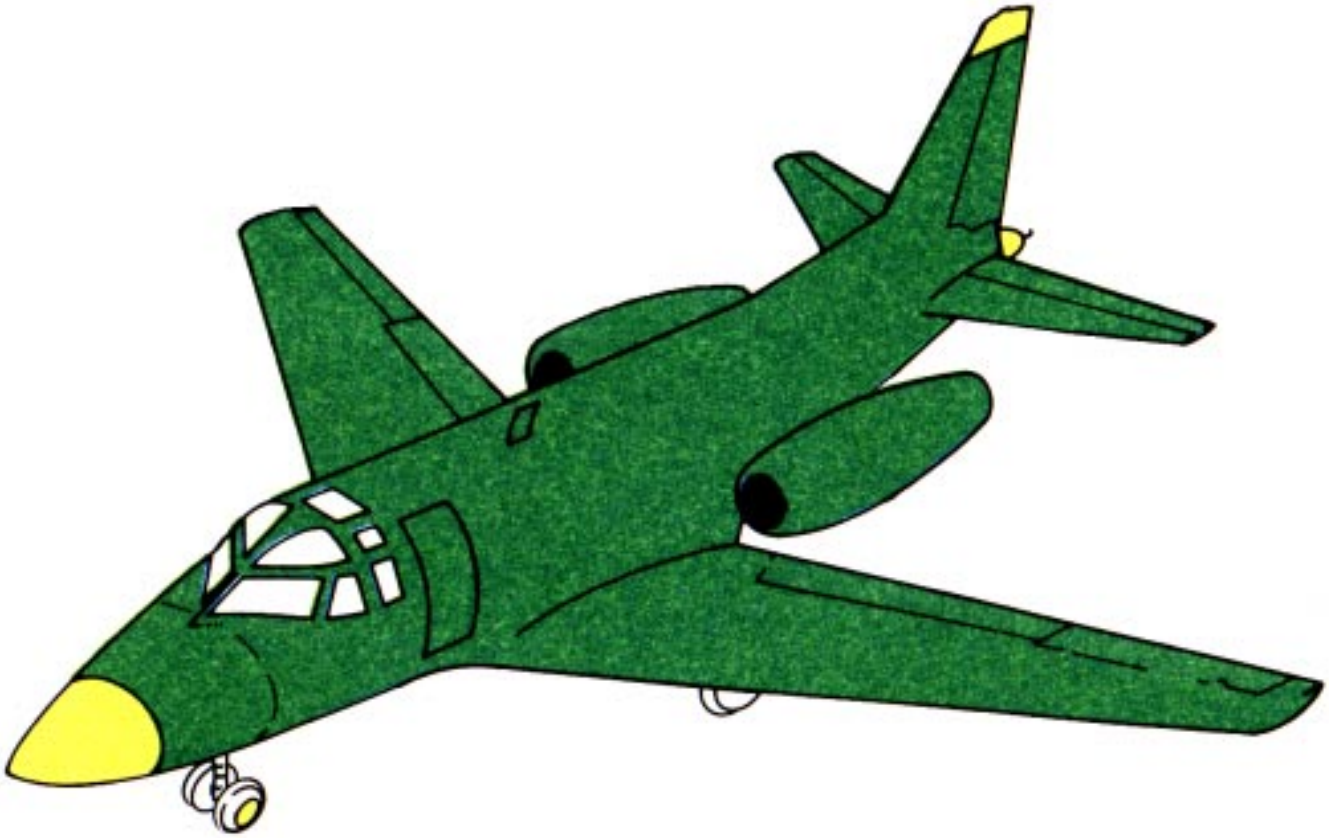

SPECIAL TOOLS/EQUIPMENT
Power Rescue Saw
Crash Ax

NOTE:
Pneumatic system is 3000 PSI.

AIRCRAFT ENTRY

1. NORMAL ENTRY

a. Turn rotary latch, located forward left side of fuselage, one quarter turn counterclockwise to unlock main entrance door. Apply even pressure on lower section of door. Door will move inward several inches and then top of door will rotate outward and start a downward swing. When door starts downward movement, support door and lower to extended position.

2. EMERGENCY ENTRY

a. If the main entrance doorway is inaccessible, enter through the ground escape hatch located on right side of fuselage just forward of the engine intake.

WARNING

This entrance lies within the danger area for the engine intake suction area.

b. Push release button, located right side of fuselage over wing.

c. Pull handle to unlock escape hatch.

d. Push escape hatch in to gain entry.

3. CUT-IN/FORCED ENTRY

a. If the door or escape hatch are inaccessible, the chopping or cutting area that would offer the least resistance is the area immediately aft of the main entrance doorway. This area may or may not be marked on the aircraft.

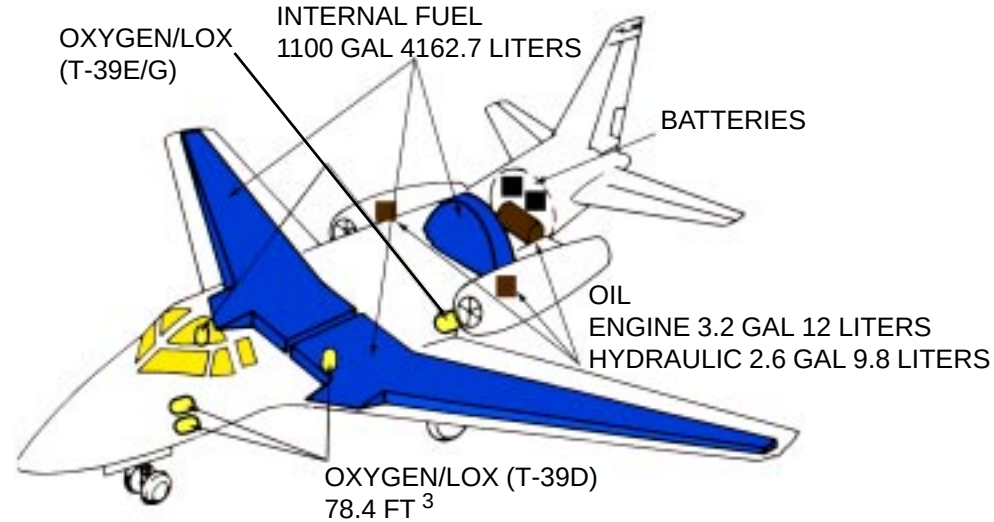

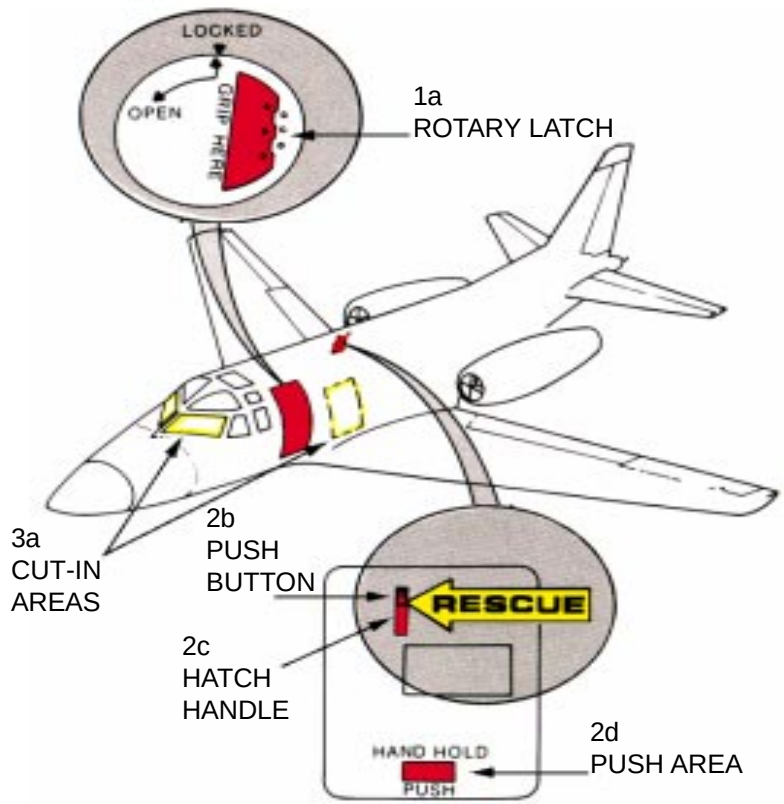

EMERGENCY ESCAPE HATCH

ENGINE SHUTDOWN AND BATTERY ACCESS

1. ENGINE SHUTDOWN

a. Depress throttle safety latches and retard throttles, located on center console, to CLOSE position.

b. Place engine master switches, located on center console forward of throttles, in OFF position (positive lock type).

c. Place electrical master switch, located on overhead center instrument panel, in OFF position (positive lock type).

d. Place battery switch, located upper left corner of forward co-pilot's instrument panel, in OFF position.

2. BATTERY ACCESS

a. Two batteries are located in the aft fuselage compartment and are accessible through the aft compartment access door. This door will be inaccessible if the aircraft is on its belly.

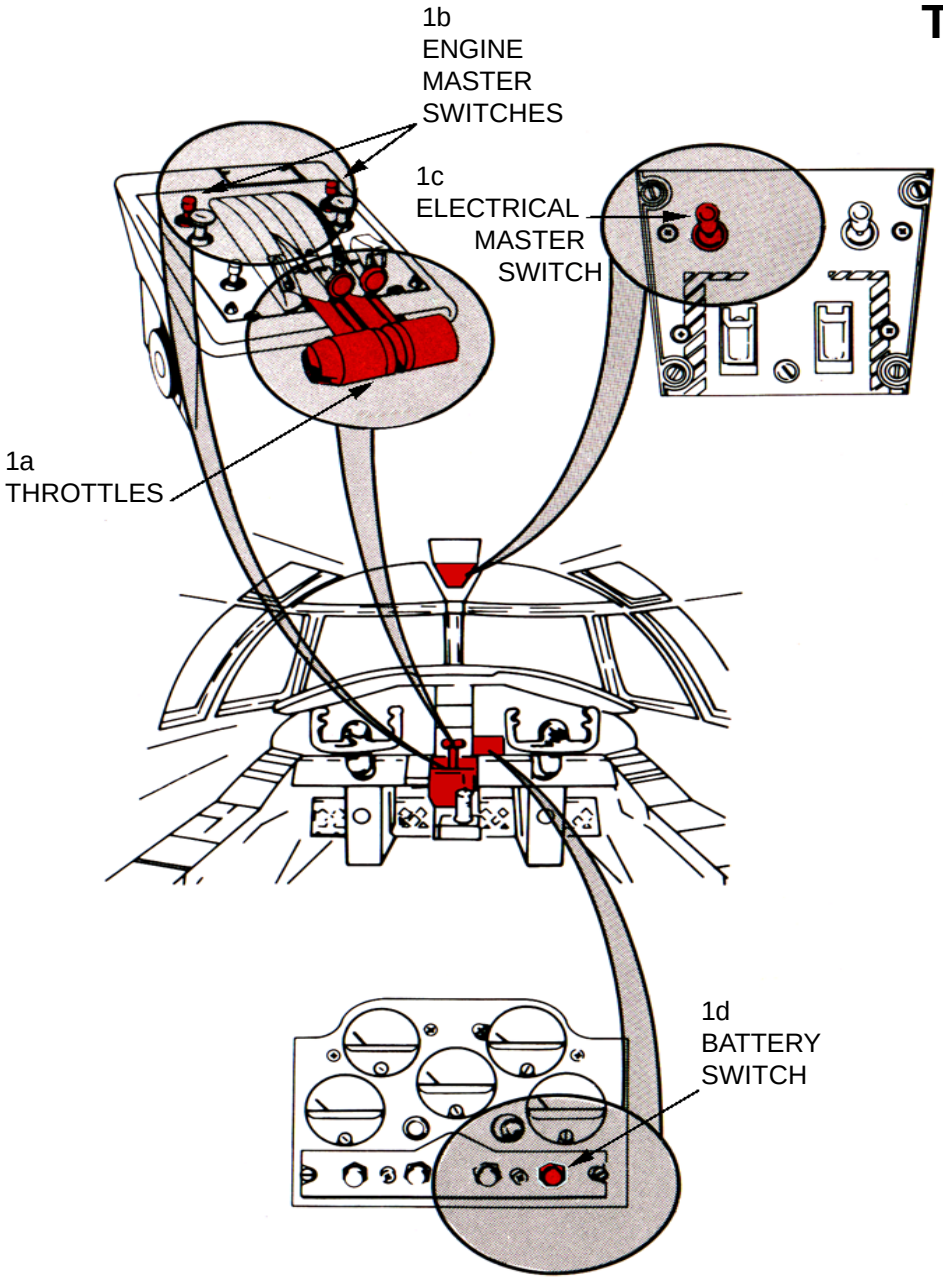

AIRCREW EXTRACTION

1. AIRCREW EXTRACTION

NOTE:
The pilot and co-pilot are attached to the seats by shoulder harnesses and lap belts. Passengers and other crewmen have lap belts only.

a. Lift quick disconnect lever to release shoulder harnesses and lap belt for the pilot and co-pilot.

b. Lift buckle cover to release lap belt (airline type) for passengers and other crewmen.

c. Seat adjustments are located on seat for positioning the seat for easy access and ease of extraction, if needed.

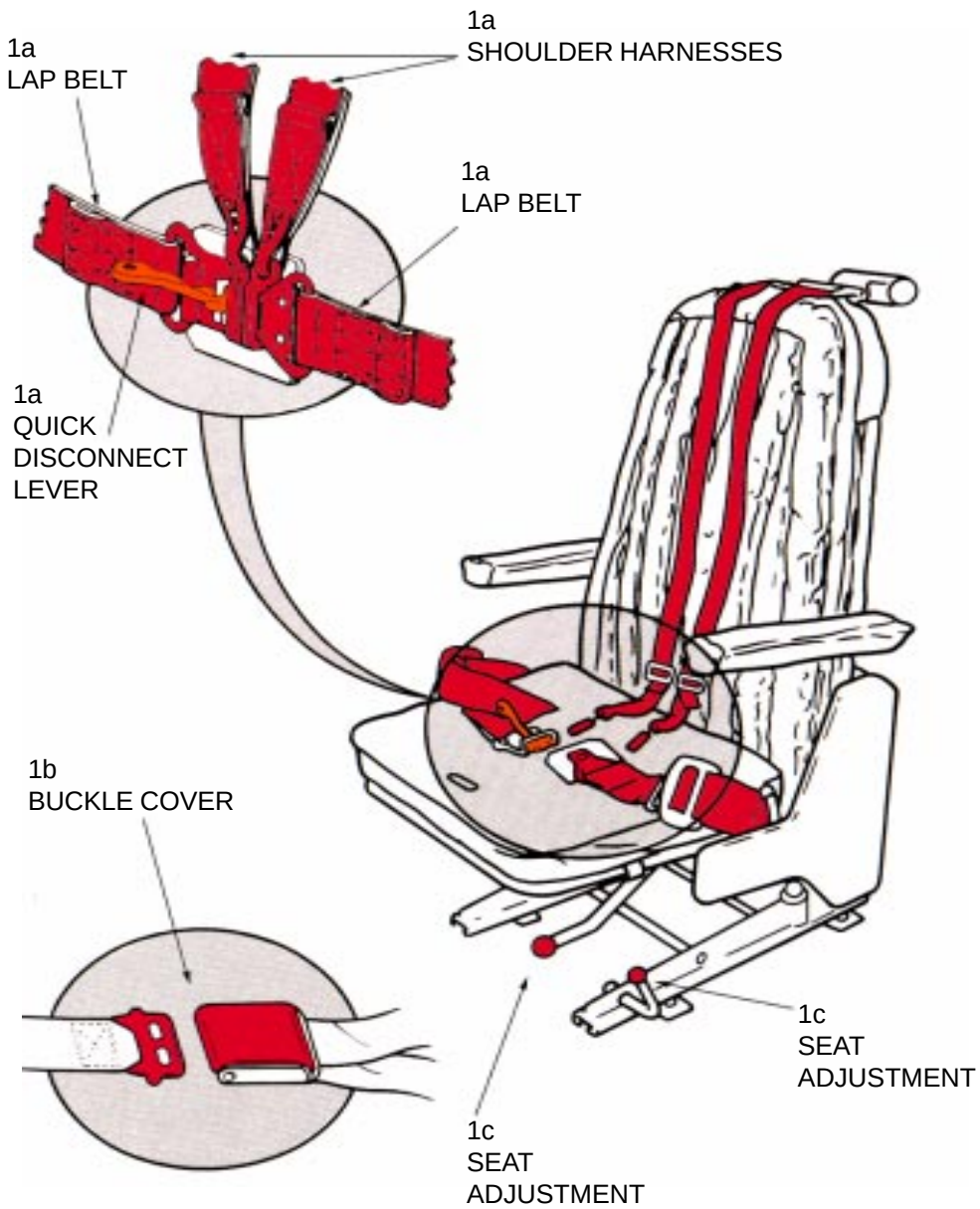

PILOT\CO-PILOT SEAT

AIRCRAFT DIMENSIONS

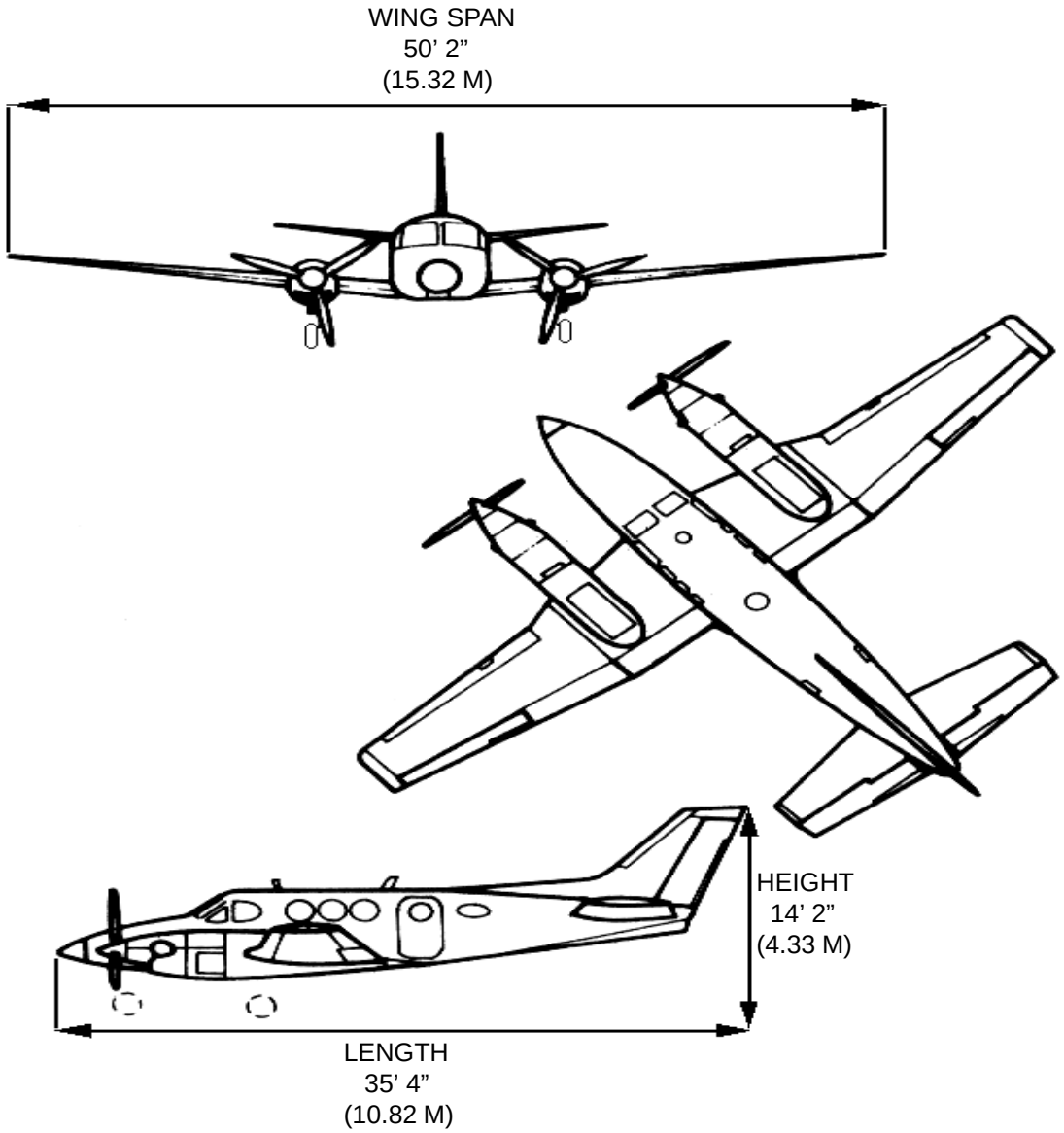

AIRCRAFT HAZARDS

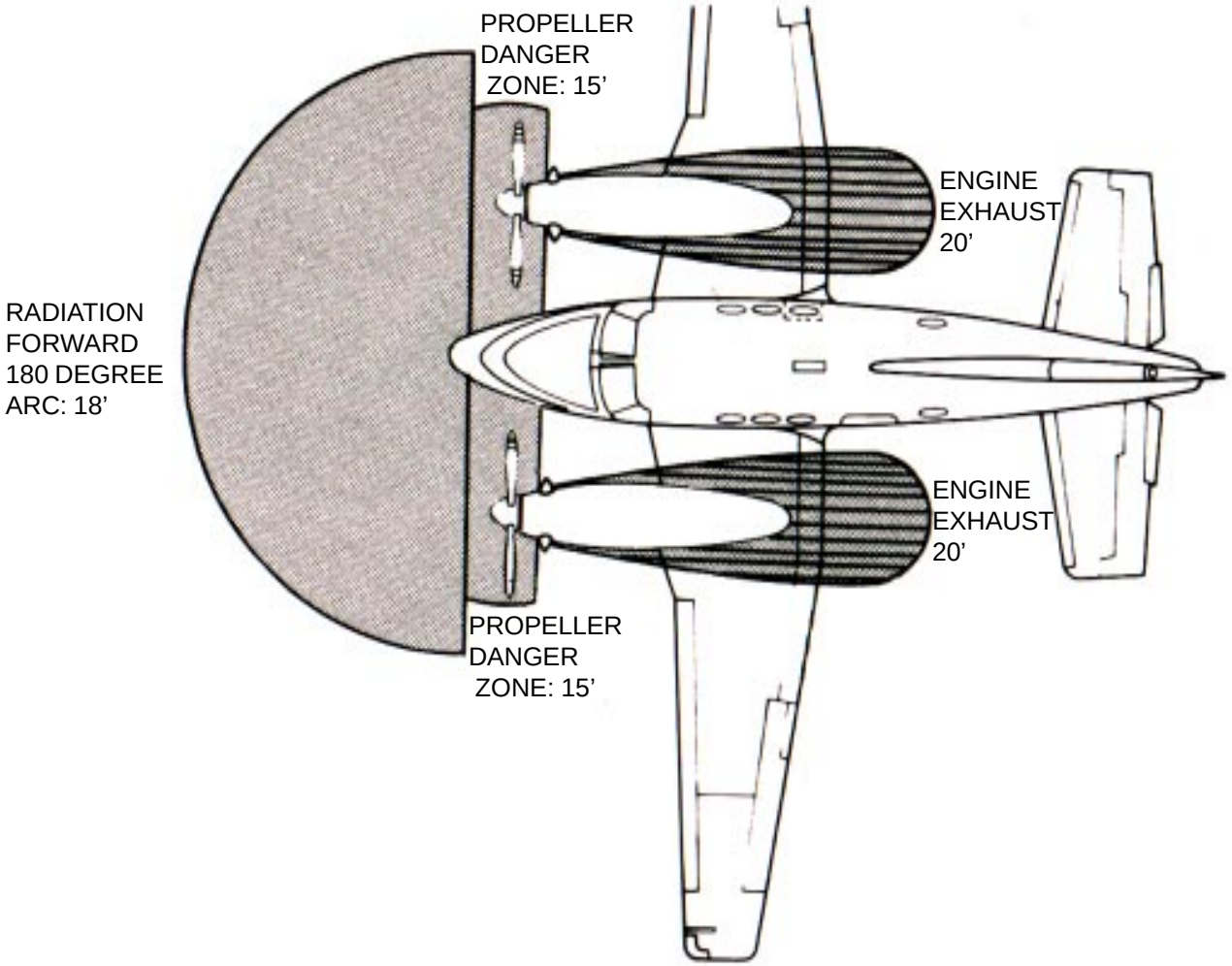

AIRFRAME MATERIALS

LEGEND

ALUMINUM

STEEL

OTHER
FIBERGLASS

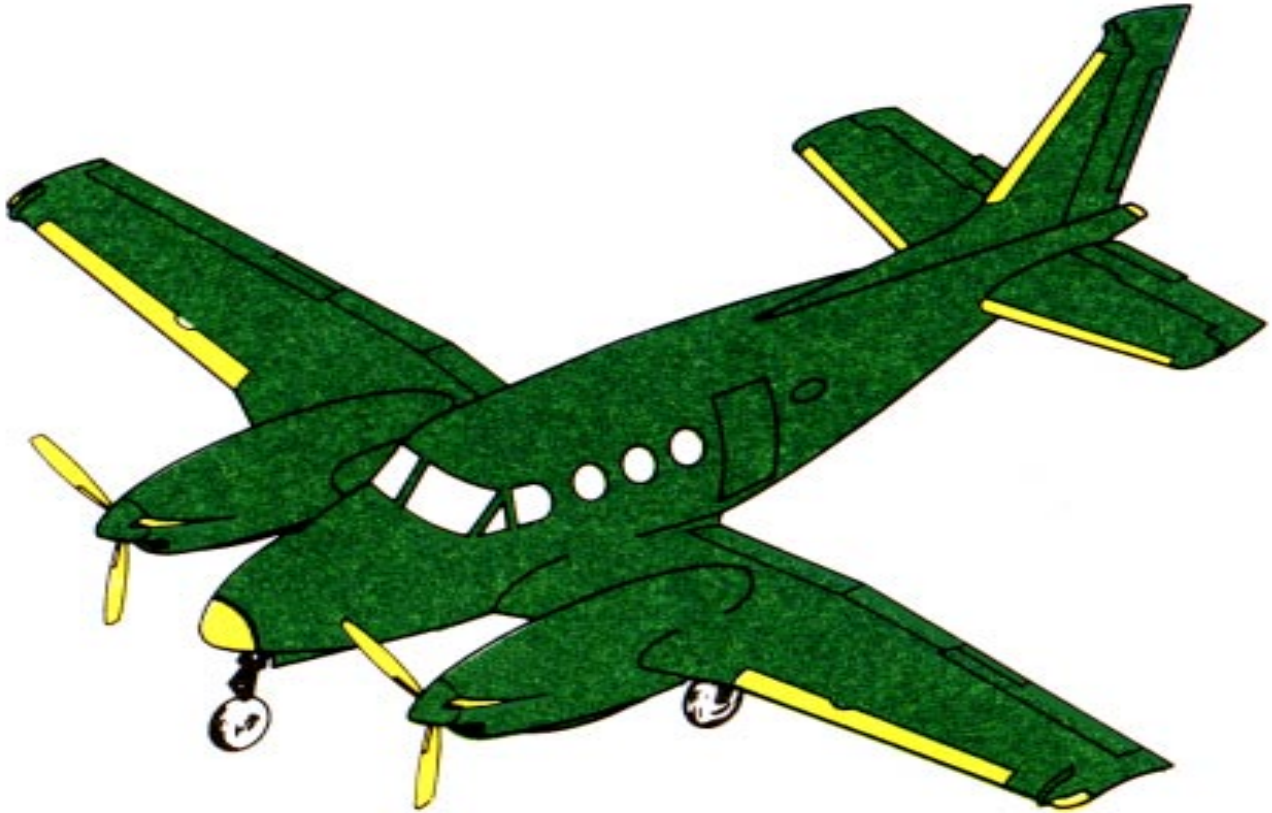

SPECIAL TOOLS/EQUIPMENT
Power Rescue Saw
Crash Ax

AIRCRAFT ENTRY

1. NORMAL ENTRY

a. Normal entry is through the cabin door located aft of the wing on the left side of the fuselage.

b. Press button behind the cabin door handle.

c. Rotate the cabin door handle clockwise to open.

2. EMERGENCY ENTRY/FORCED ENTRY

a. The emergency exit hatch is located on right side of fuselage.

b. Using crash ax, break window and reach through window, remove inside cover over release handle.

c. Press push button below handle.

d. Pull handle inward and up to release hatch.

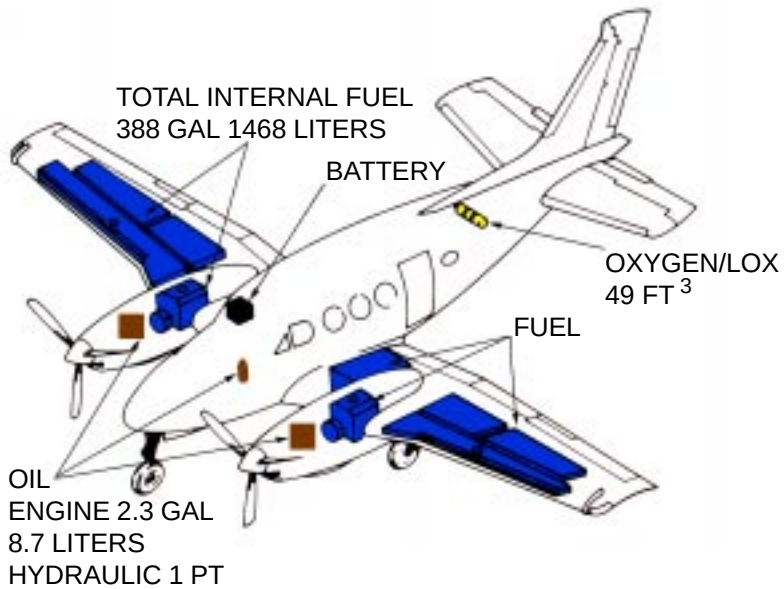

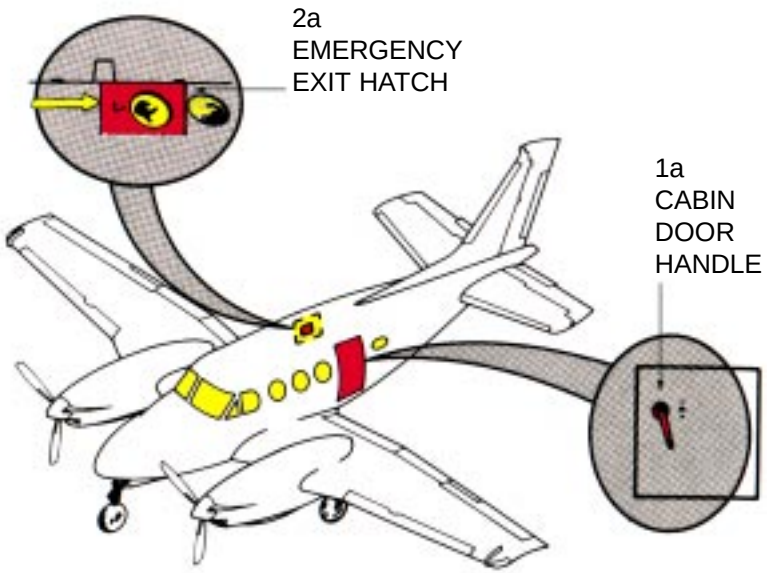

ENGINE SHUTDOWN AND BATTERY ACCESS

1. ENGINE SHUTDOWN

a. Move condition levers, located on center console, aft to CUT-OFF position.

b. Raise switch guards and move fuel valve switches, located on pilot's right console, down in CLOSED position.

c. Place battery switch, located on center console, in the OFF position by moving the master gang bar aft.

2. BATTERY ACCESS

a. The battery is located in the top of the right wing center section and equipped with a quick disconnect plug.

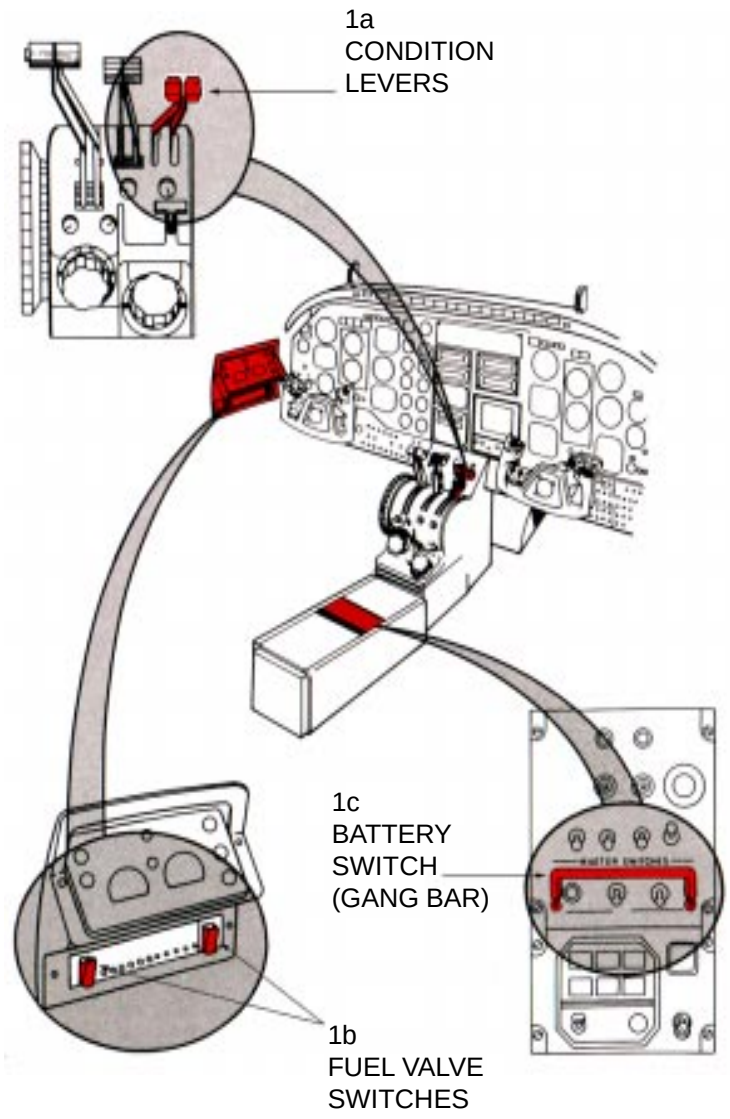

AIRCREW EXTRACTION

1. AIRCREW EXTRACTION

NOTE:
Pilot and co-pilot are attached to the seats by shoulder straps attached to the lap belt by a quick disconnect buckle. The passengers have lap belts only.

a. Lift buckle cover to release shoulder harness and lap belt for pilot and co-pilot.

b. Lift buckle cover to release lap belt for passengers.

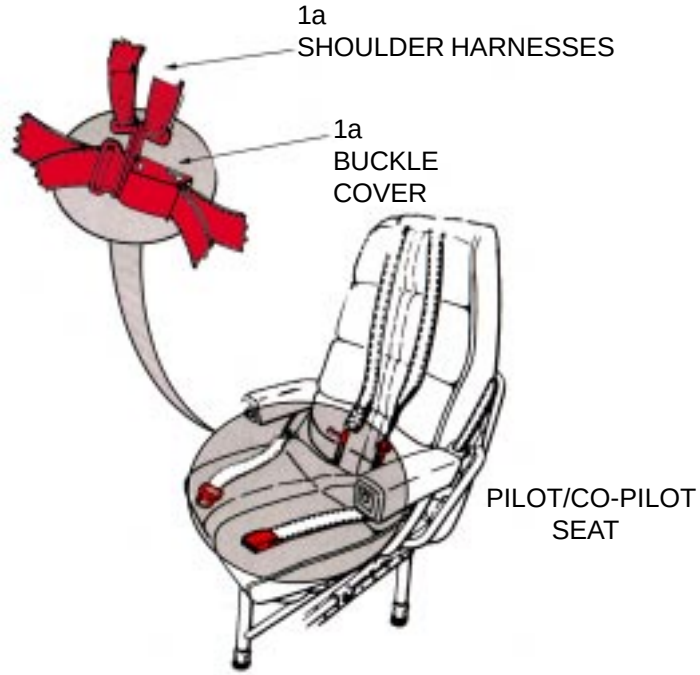

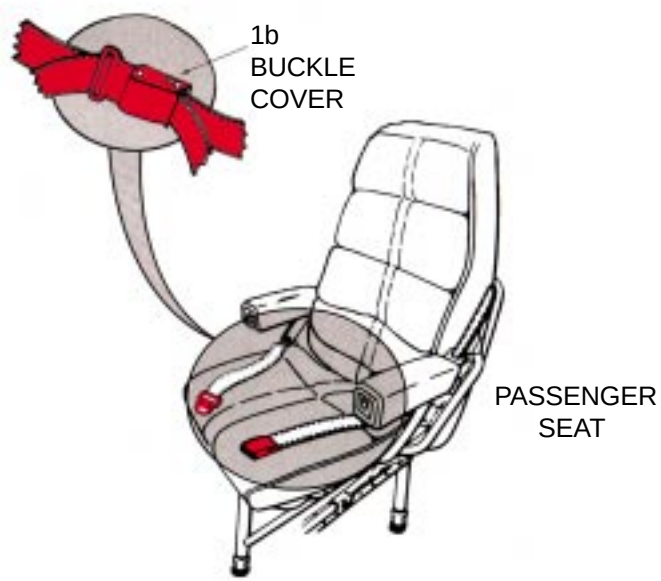

AIRCRAFT DIMENSIONS

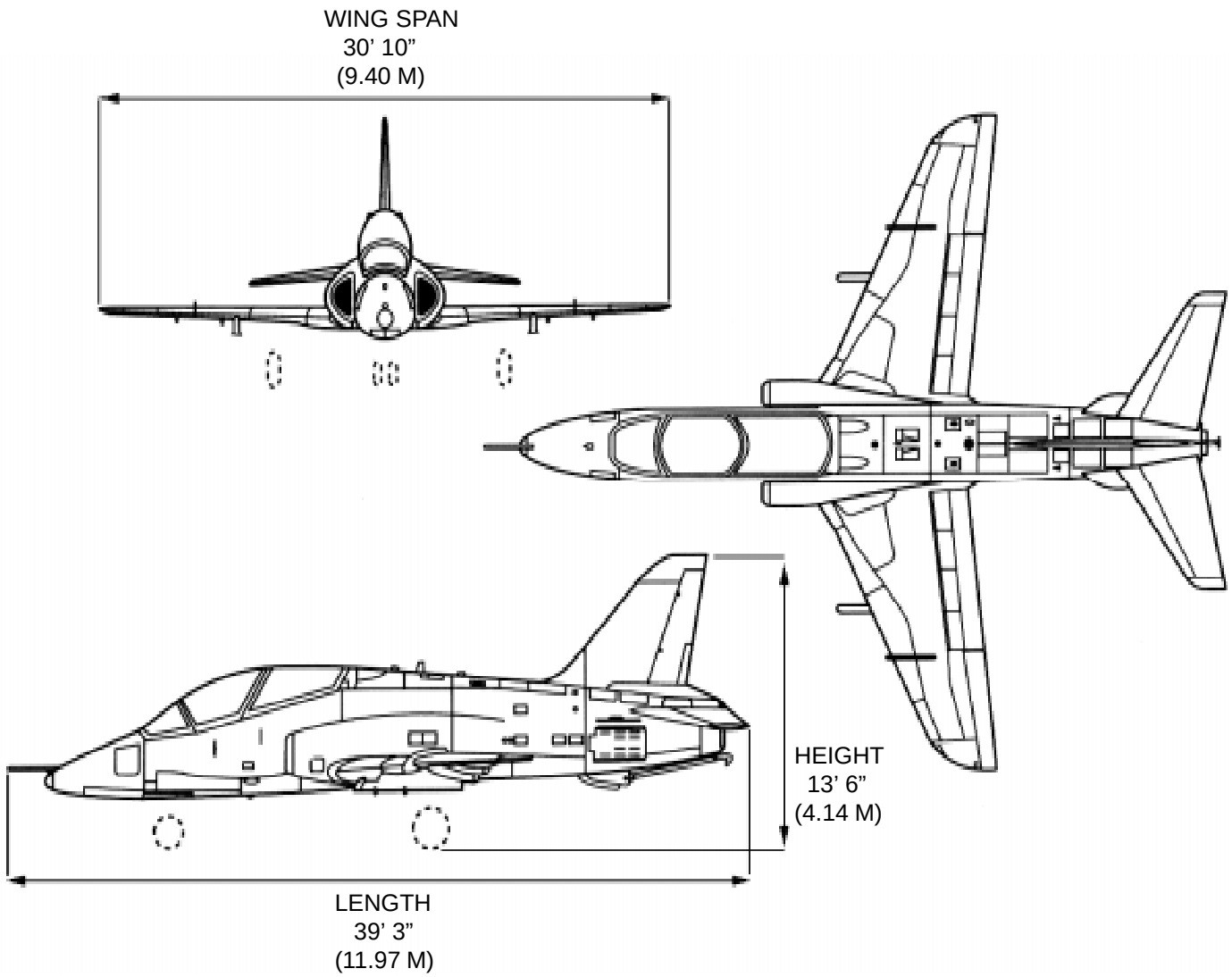

AIRCRAFT HAZARDS

WARNING

Remove all objects under the aircraft. Failure to do so can result in damage to the aircraft or injury to personnel.

WARNING

Stay clear of area within 100 feet directly behind the aircraft when the engine is operating at military thrust (MRT).

WARNING

Make certain that intake danger area is clear of debris. Jet blast zone varies according to prevailing wind.

ARMAMENT: Rockets, PRAC Bombs

PYROTECHNICS: Pylon Ejectors, Mild Detonating Cord

AIRCRAFT MATERIALS: Aluminum, Steel, Acrylic, Titanium, Fiberglass, Carbon Composites

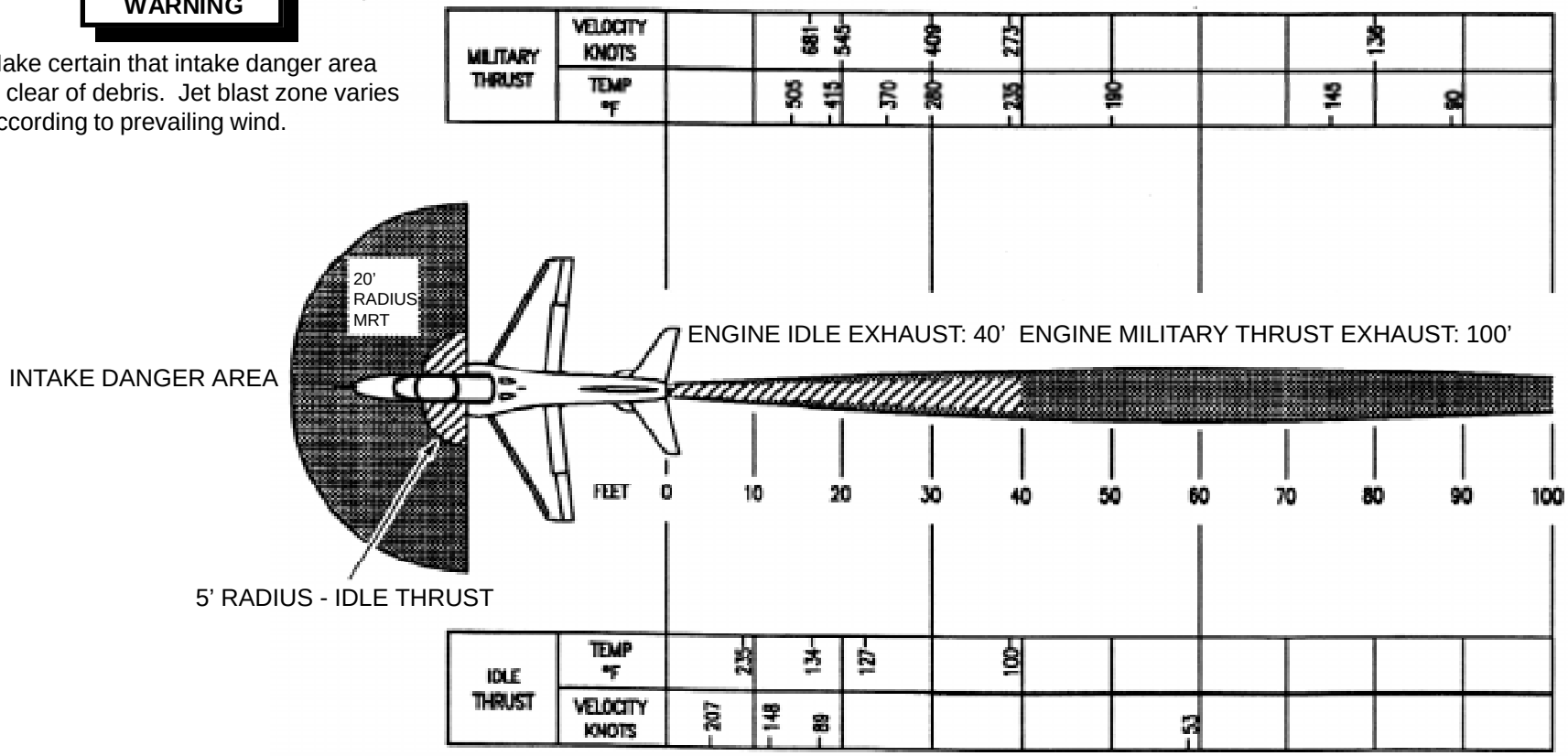

AIRCRAFT HAZARDS-Continued

NOTE:
T-45A uses a Onboard Oxygen Generating System (OBOGS).

CAUTION

- Do not apply fire extinguishing agent into engine exhaust tailpipe.
- Do not puncture fuel tanks, fire will spread when fuel is released.
- Do not stand in front of air intake ducts when applying fire extinguishing agent.

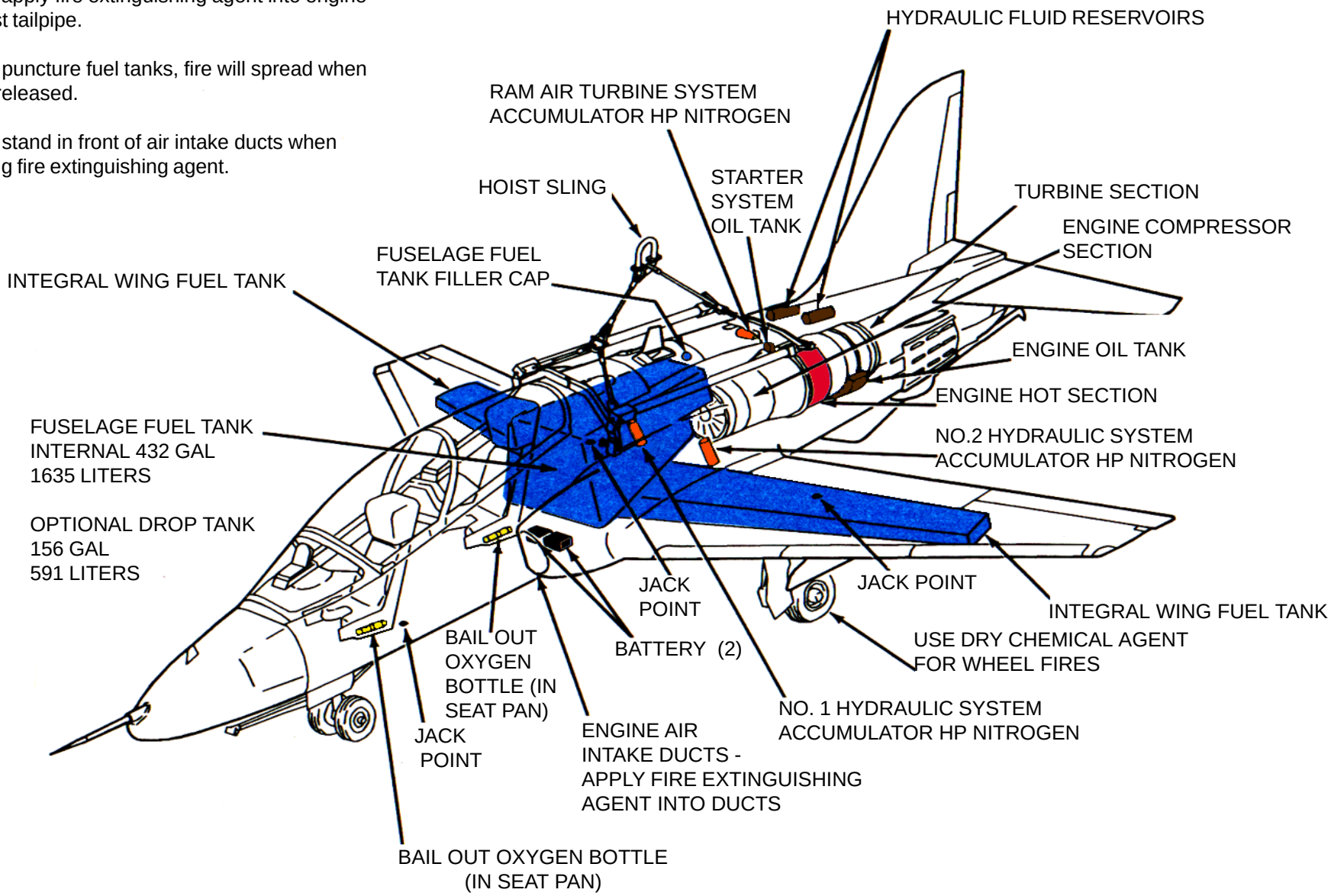

SPECIAL TOOLS/EQUIPMENT
Power Rescue Saw
Crash Ax

AIRCRAFT ENTRY

1. NORMAL ENTRY
a. Access to the cockpit in normal operations is gained by using the canopy external operating handle located on the left side of the fuselage.

2. MANUAL ENTRY
a. Depress canopy handle release, located on the external canopy handle, to release canopy handle.
b. Rotate canopy handle clockwise.
c. Release safety catch on internal canopy operating lever, located on left forward inside of cockpit, and pull to release canopy.

3. EMERGENCY ENTRY

NOTE:
The aircraft is not equipped with an external canopy jettison handle.

a. Access to the cockpit can be gained in emergency situations by manually opening the canopy using the external operating handle; however, if this proves impossible, the canopy can be shattered by the AIRCREW operation of the Mild Detonating Cords (MDC).

4. CUT-IN/FORCED ENTRY
a. Canopy is acrylic plastic and may be cut with power rescue saw or shattered by impact with the crash ax. All four sides will require cutting to remove canopy.

5. CANOPY SAFETY PROCEDURES
a. Gain access and safety the canopy MCD by depressing the canopy handle and release.
b. Rotate canopy handle clockwise.
c. Remove streamers and safety pins from right hand map case containers.
d. Install safety pins in the actuator to safety the internal canopy MDC firing handle in both cockpits.

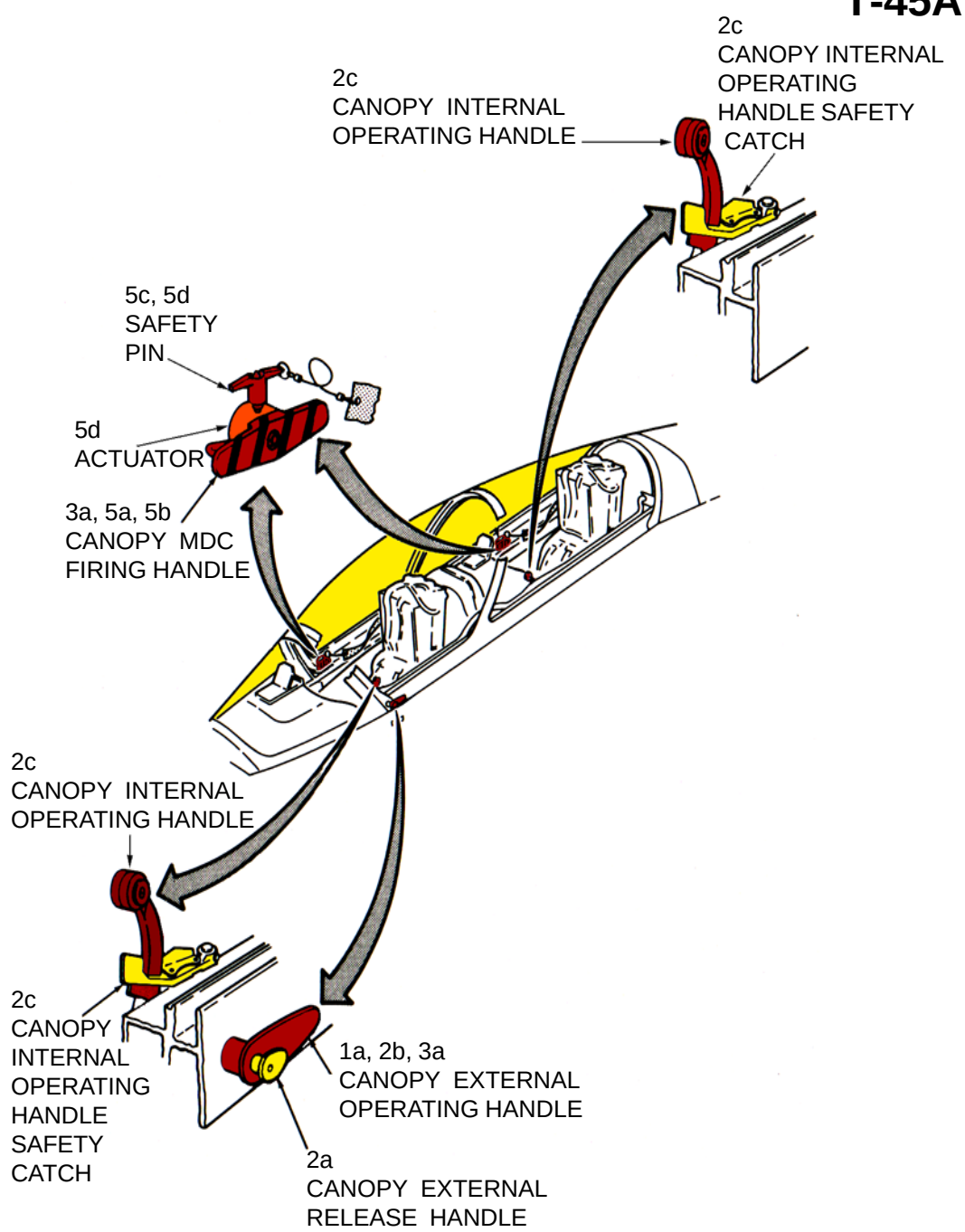

ENGINE SHUTDOWN

1. ENGINE SHUTDOWN

NOTE:
Procedures take place in forward cockpit.

a. Lift idle detent lock, located forward of throttle on left hand console.

b. Place throttle, located on left hand console, to OFF position.

c. Pull emergency fuel shutoff handle, located aft of throttle on left console.

d. Place battery switches No. 1 and No.2, located aft right hand console forward of map container, to OFF position.

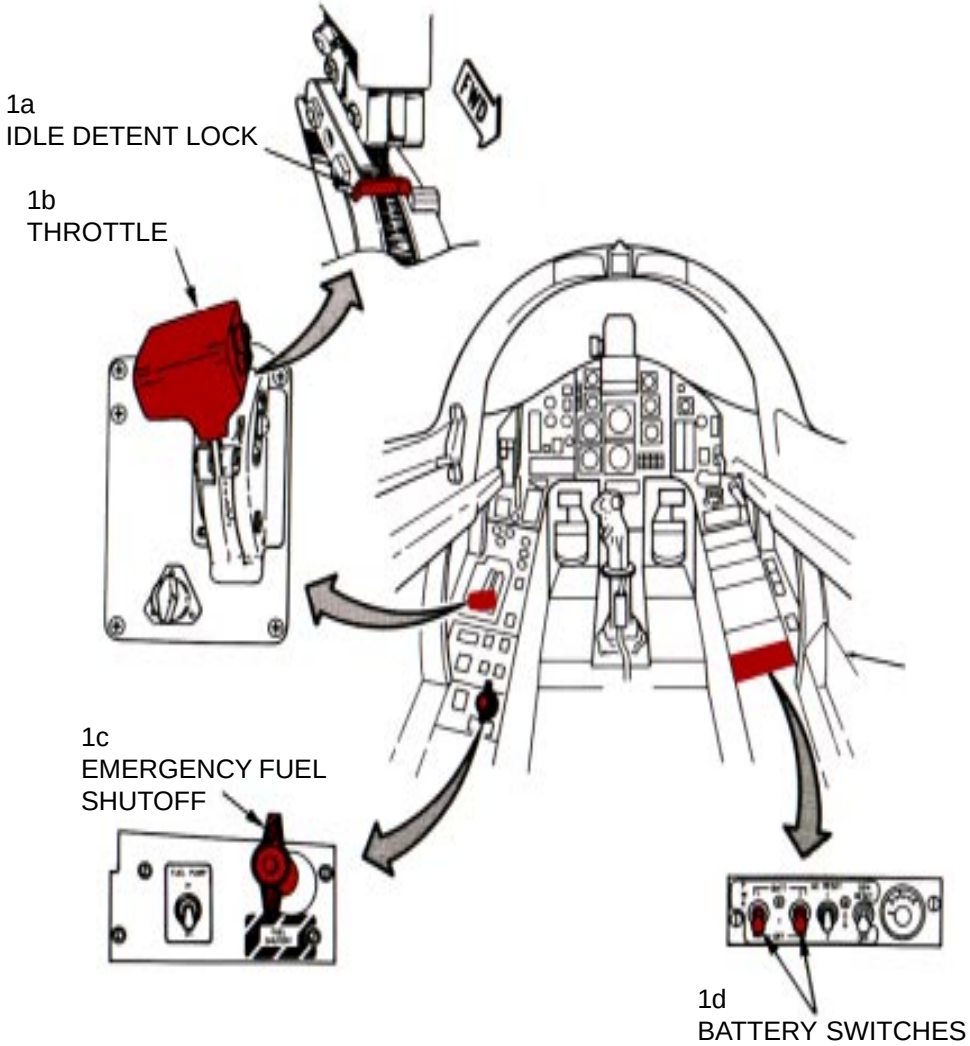

AIRCREW EXTRACTION

1. AIRCREW EXTRACTION

NOTE:
The T-45A uses the Martin-Baker 14 NACES ejection seat. Pilot and co-pilot are attached to the seat by shoulder straps and lap belt with quick disconnects.

a. Remove oxygen mask.

b. Remove streamer and safety pin from right hand map container and install in ejector control handle.

c. Depress thumb button on emergency restraint handle and pull handle UP.

d. Install safety pin in canopy MDC firing handle.

e. Disconnect pilot's communication/oxygen hose from seat pan.

f. Disconnect G-suit hose from aircraft console.
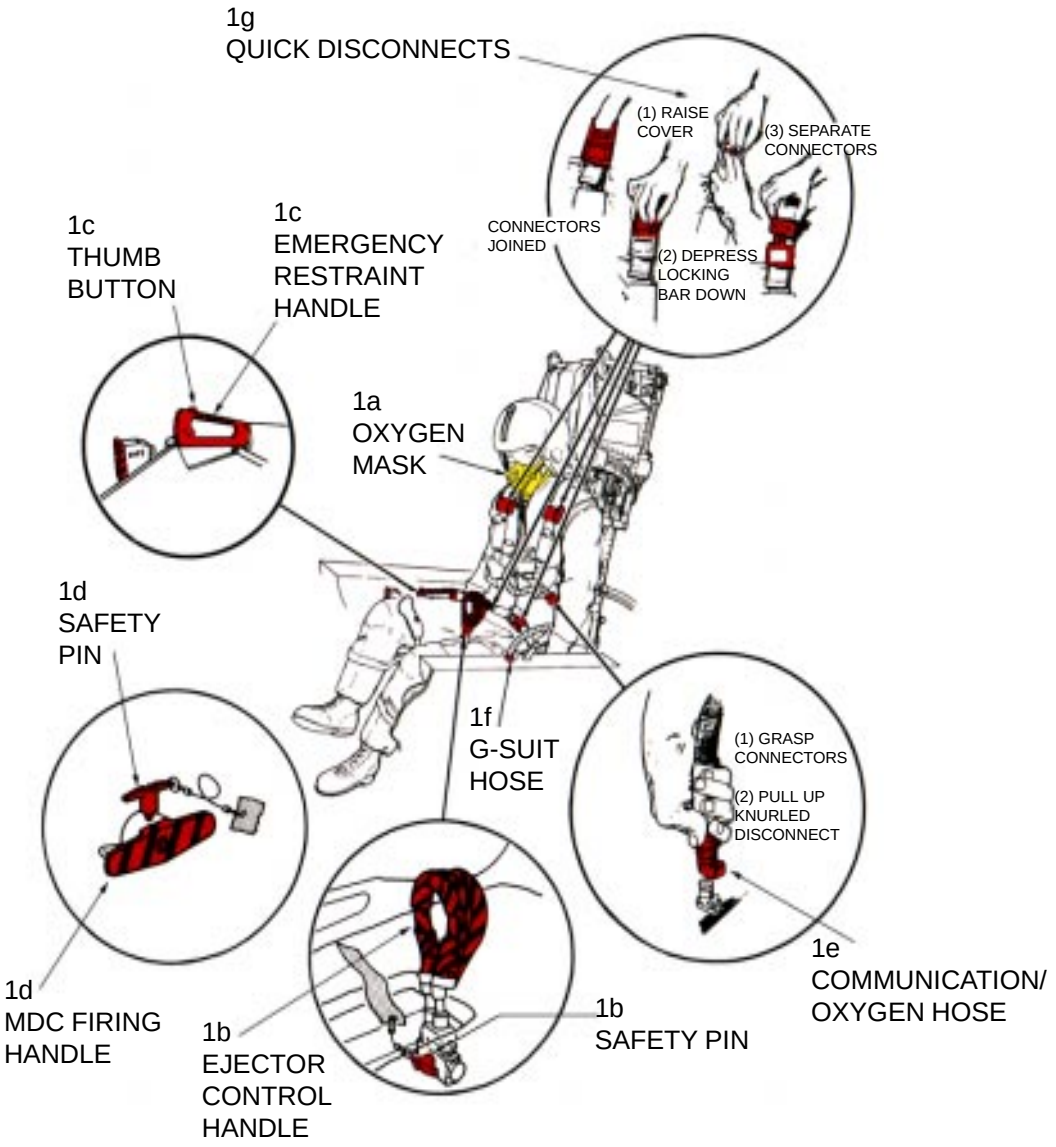
g. Support pilot, release four (4) quick disconnects or cut webbing and remove pilot from cockpit.