DAMAGE CONTROL LAYOUT SKETCHES

SECTION 13 – SHORING EVOLUTION

SKETCH NO.	TITLE OF SKETCH	SHEET NO.
001	Measuring Length and Angle of Shore Using Measuring Batten	13-2
002	Measuring and Cutting Shores Using Folding Rule or Steel Tape and Carpenter's Square	13-3
003	I-Type Shoring Using 3-5 Foot or 6-11 Foot Metal Shores	13-4
004	I and K-Type Shoring Using Wooden and Adjustable 6-11 Foot Metal Shores	13-5
005	I and K-Type Shoring Using Adjustable 3-5 Foot and 6-11 Foot Metal Shores	13-6
006	I-Type Shoring as Erected in Passsage on USS SAMUEL B. ROBERTS (FFG 58)	13-7
007	Shoring Split Seam After Bulkhead of Auxiliary Machinery Room on USS SAMUEL B. ROBERTS (FFG 58)	13-8
008	K-Type Shoring Forward Bulkhead in CMBD SPLY DEPT STRM - USS SAMUEL B. ROBERTS (FFG 58)	13-9
009	H-Type Shoring with Wooden Shores	13-10
010	I-Type Shoring Using Wooden Shore to Support Sagging Overhead on Mine Warfare Class Ships	13-11
011	I-Type Shoring Using Multiple Combinations of 6-11 Foot Metal Shores and Wooden Shore to Support Overhead Deck or Load	13-12
012	I-Type Shoring on Watertight Door Using Wooden Shores	13-13
013	I-Type Shoring on Watertight Door Using Metal Shores	13-14
014	I-Type Shoring on Hatch with Scuttle Using Wooden Shores	13-15
015	I-Type Shoring on Hatch with Scuttle Using Metal Shores	13-16
016	K-Type Shoring	13-17
017	K-Type Shoring on Watertight Door Using Wooden Shores	13-18
018	K-Type Shoring on Watertight Door Using Metal Shores	13-19
019	Distributing Bulkhead Pressure Over Stiffeners with K-Type Shoring (Using Wooden or/and Metal Shores)	13-20
020	Compound Shoring	13-21
021	Shoring from Bulkhead to Hatch and Providing Support for Weakened Overhead on Mine Warfare Class Ships	13-22
022	General Rules for Shoring Against Horizontal Pressure	13-23
023	General Rules for Setting Correct Shoring Angles	13-24
024	Strengthening Shores	13-25

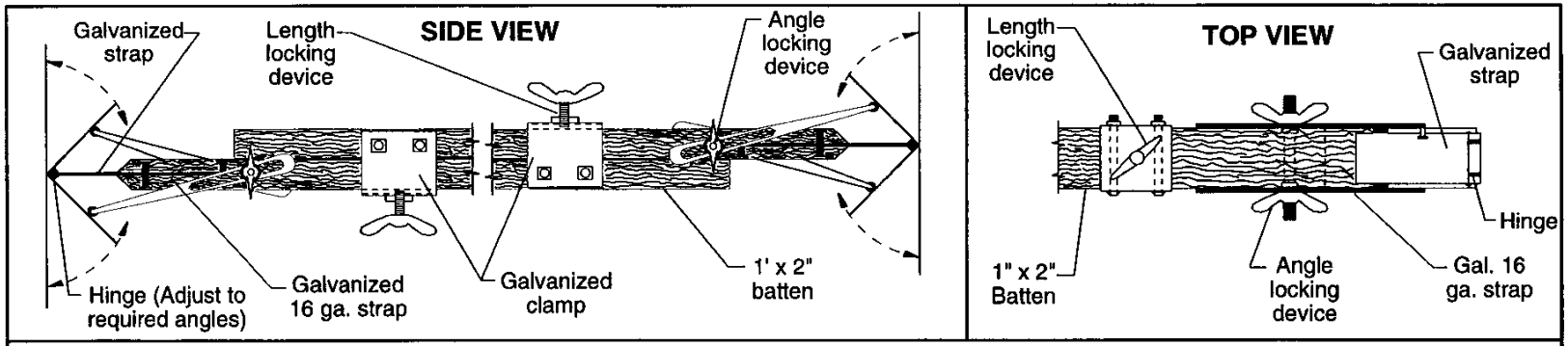

MEASURING BATTEN
(Length of Batten Varies and Is Adjustable to Suit Condition)

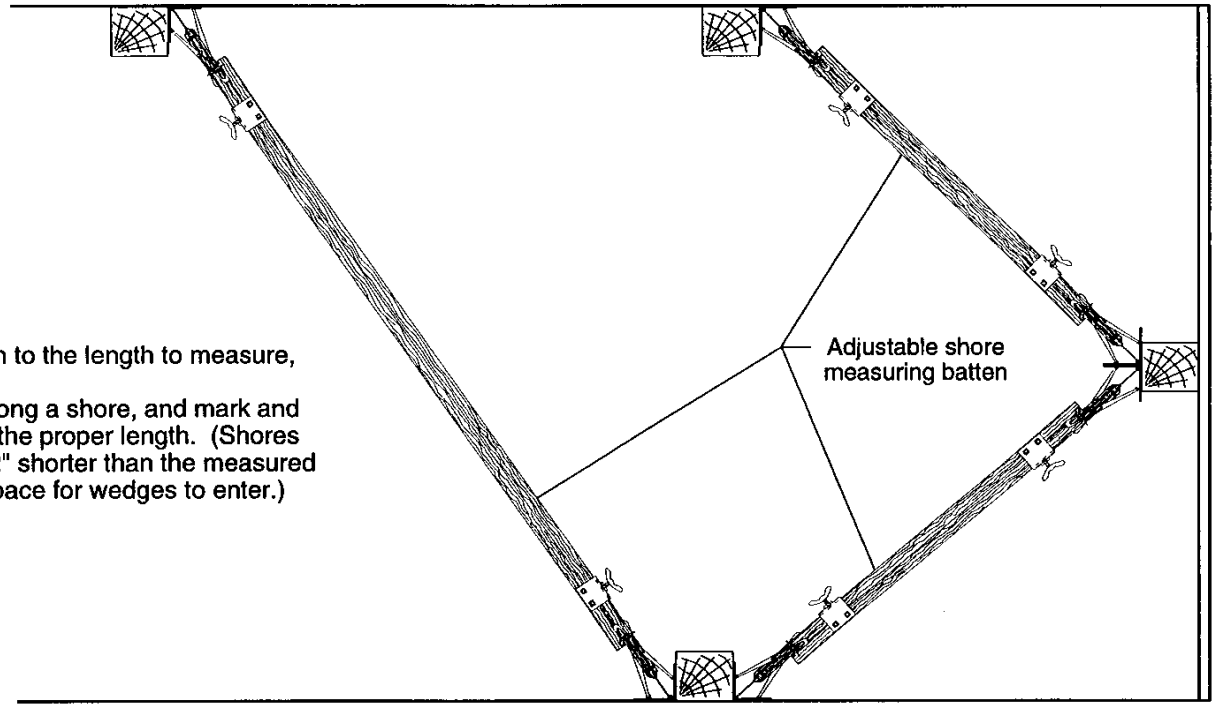

1. Extend the batten to the length to measure, and lock it.
2. Lay the batten along a shore, and mark and cut the timber to the proper length. (Shores should be cut 1/2" shorter than the measured length to allow space for wedges to enter.)

SHORING EVOLUTION - SKETCH #001
Measuring Length and Angle of Shore Using Measuring Batten

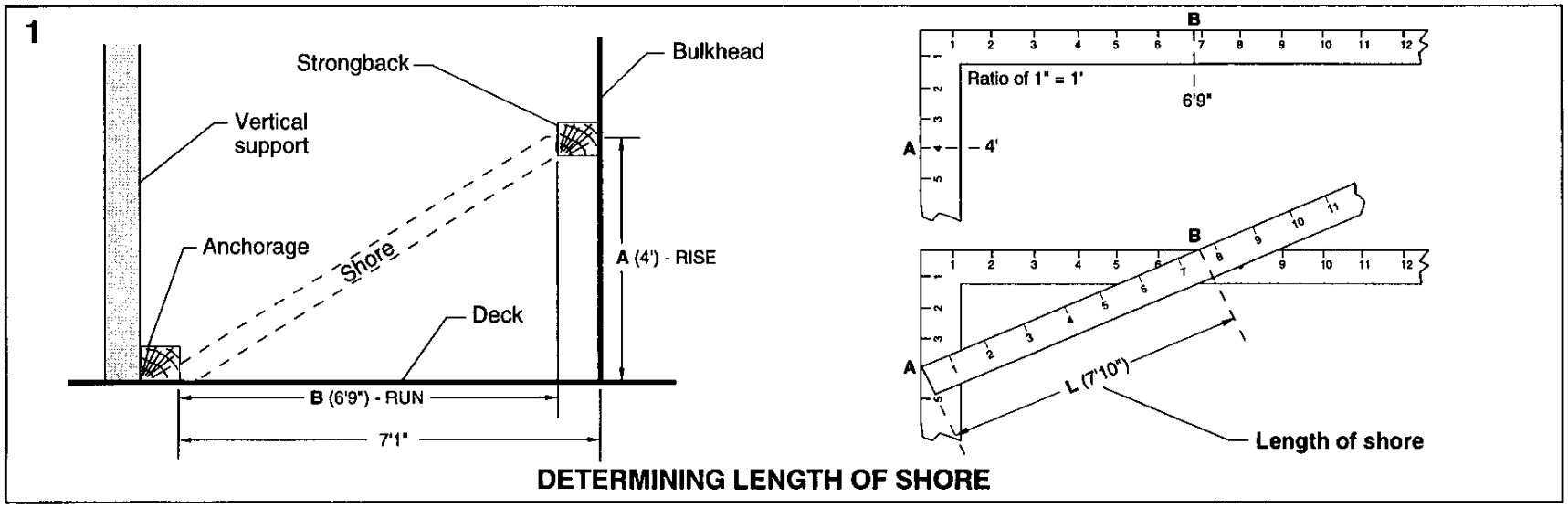

DETERMINING LENGTH OF SHORE

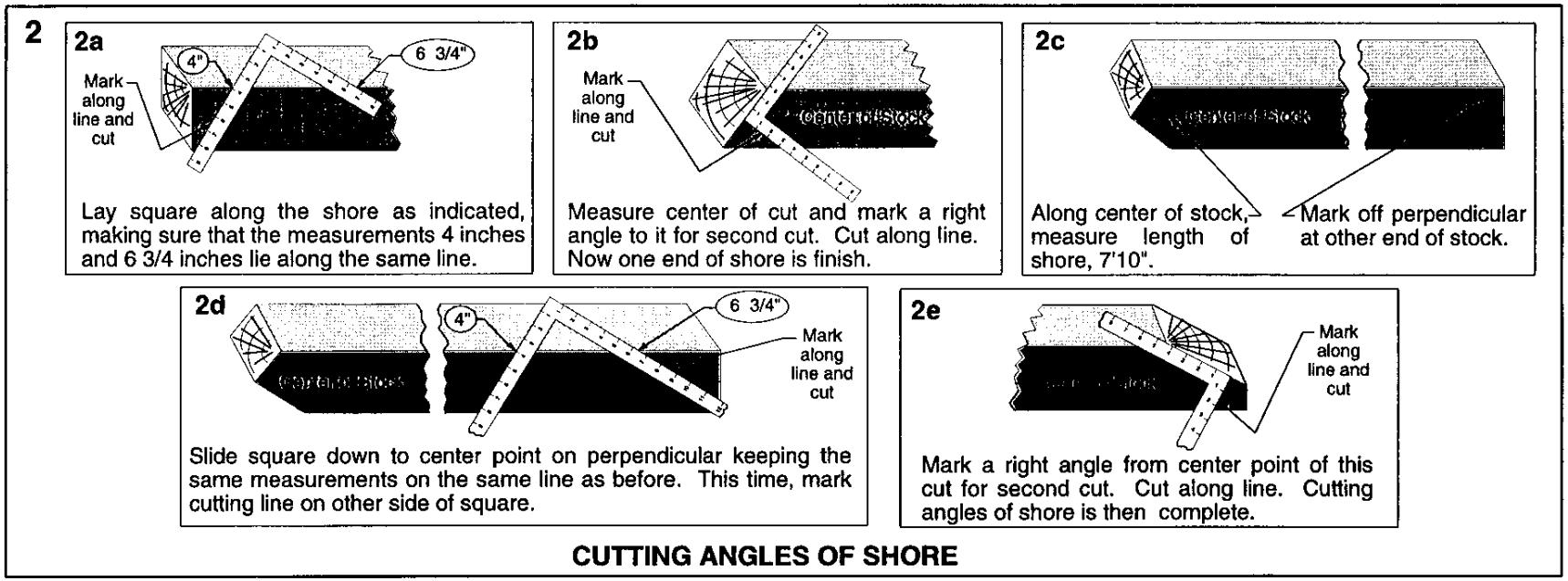

CUTTING ANGLES OF SHORE

SHORING EVOLUTION - SKETCH #002
Measuring and Cutting Shores Using Folding Rule or Steel Tape and Carpenter's Square

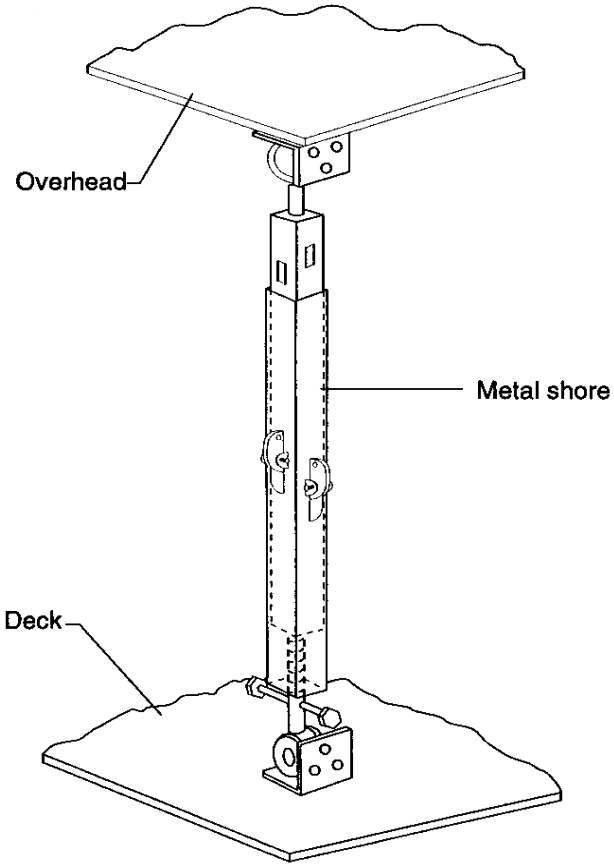

STEEL SHORING ON DECK
COFFERDAM OR TANK
NOTE: BACKING PLATE MAY BE USED

OR

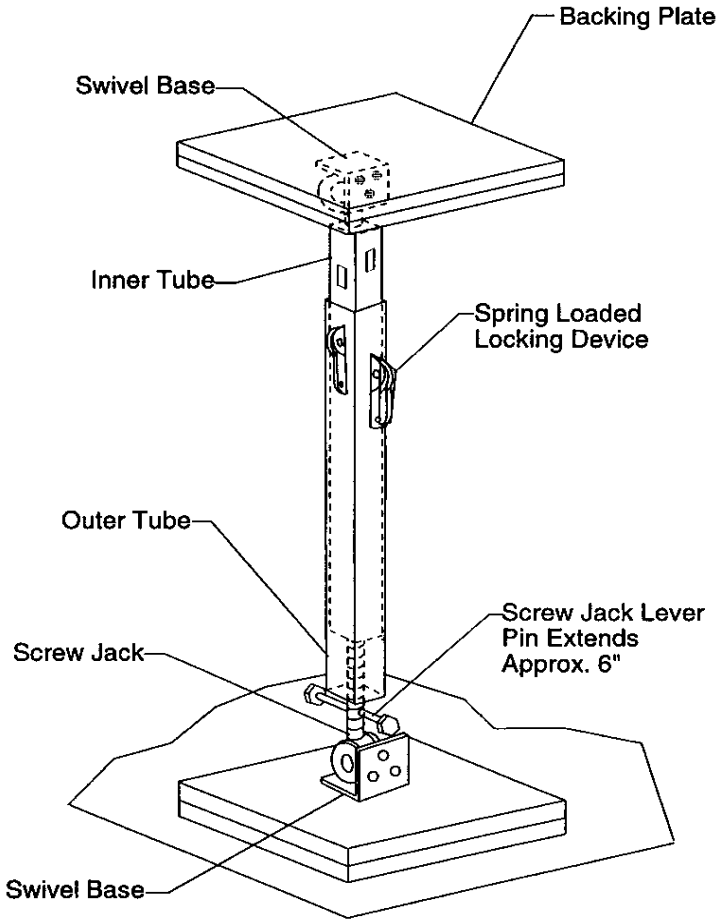

STEEL SHORING ON BACKING PLATE
STANDARD COMPARTMENT

SHORING EVOLUTION - SKETCH #003
I-Type Shoring Using 3-5 Foot or 6-11 Foot Metal Shores

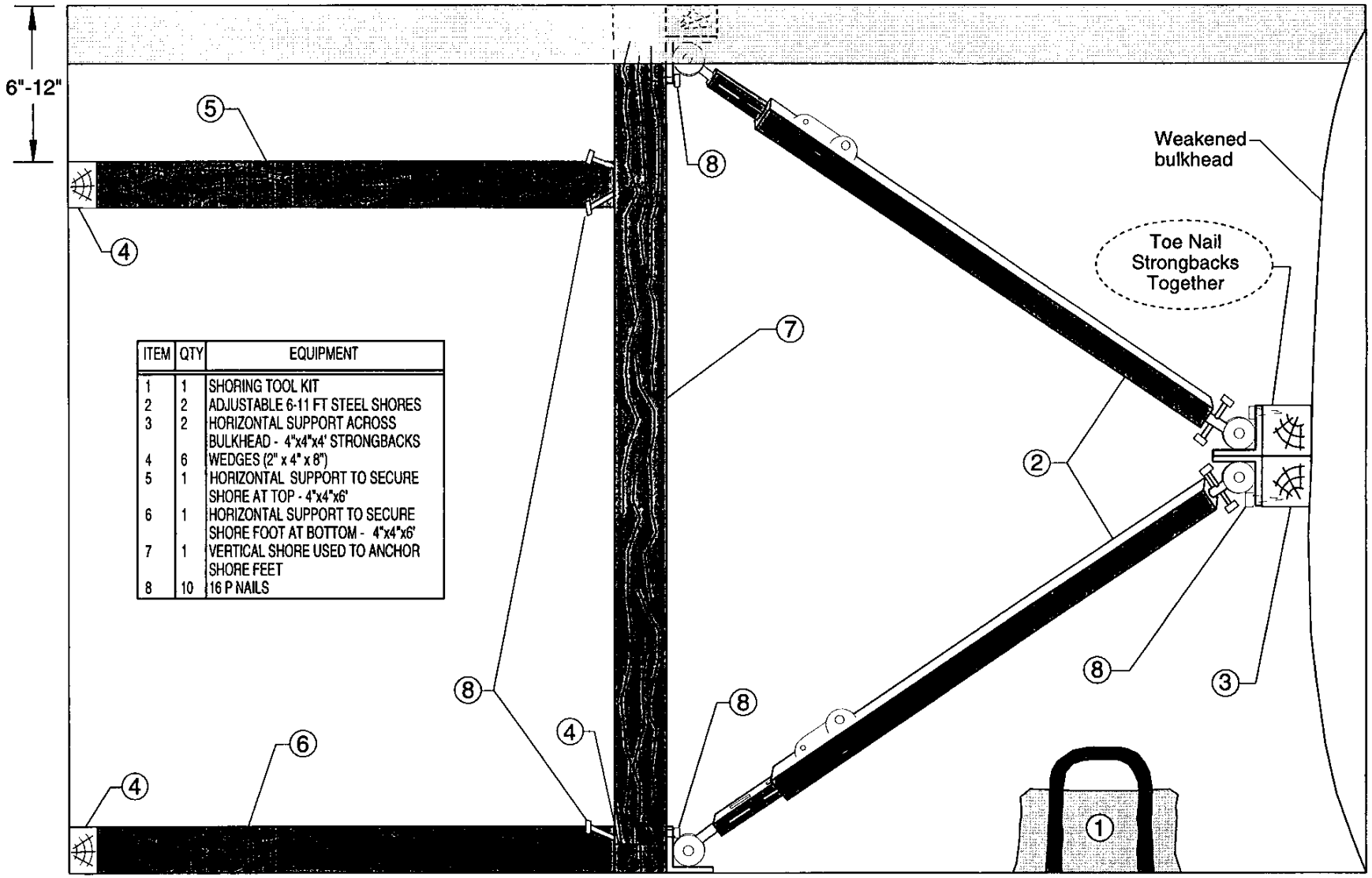

ITEM	QTY	EQUIPMENT
1	1	SHORING TOOL KIT
2	2	ADJUSTABLE 6-11 FT STEEL SHORES
3	2	HORIZONTAL SUPPORT ACROSS BULKHEAD - 4"x4"x4' STRONGBACKS
4	6	WEDGES (2" x 4" x 8")
5	1	HORIZONTAL SUPPORT TO SECURE SHORE AT TOP - 4"x4"x6'
6	1	HORIZONTAL SUPPORT TO SECURE SHORE FOOT AT BOTTOM - 4"x4"x6'
7	1	VERTICAL SHORE USED TO ANCHOR SHORE FEET
8	10	16 P NAILS

SHORING EVOLUTION - SKETCH #004
I and K-Type Shoring Using Wooden and Adjustable 6-11 Foot Metal Shores

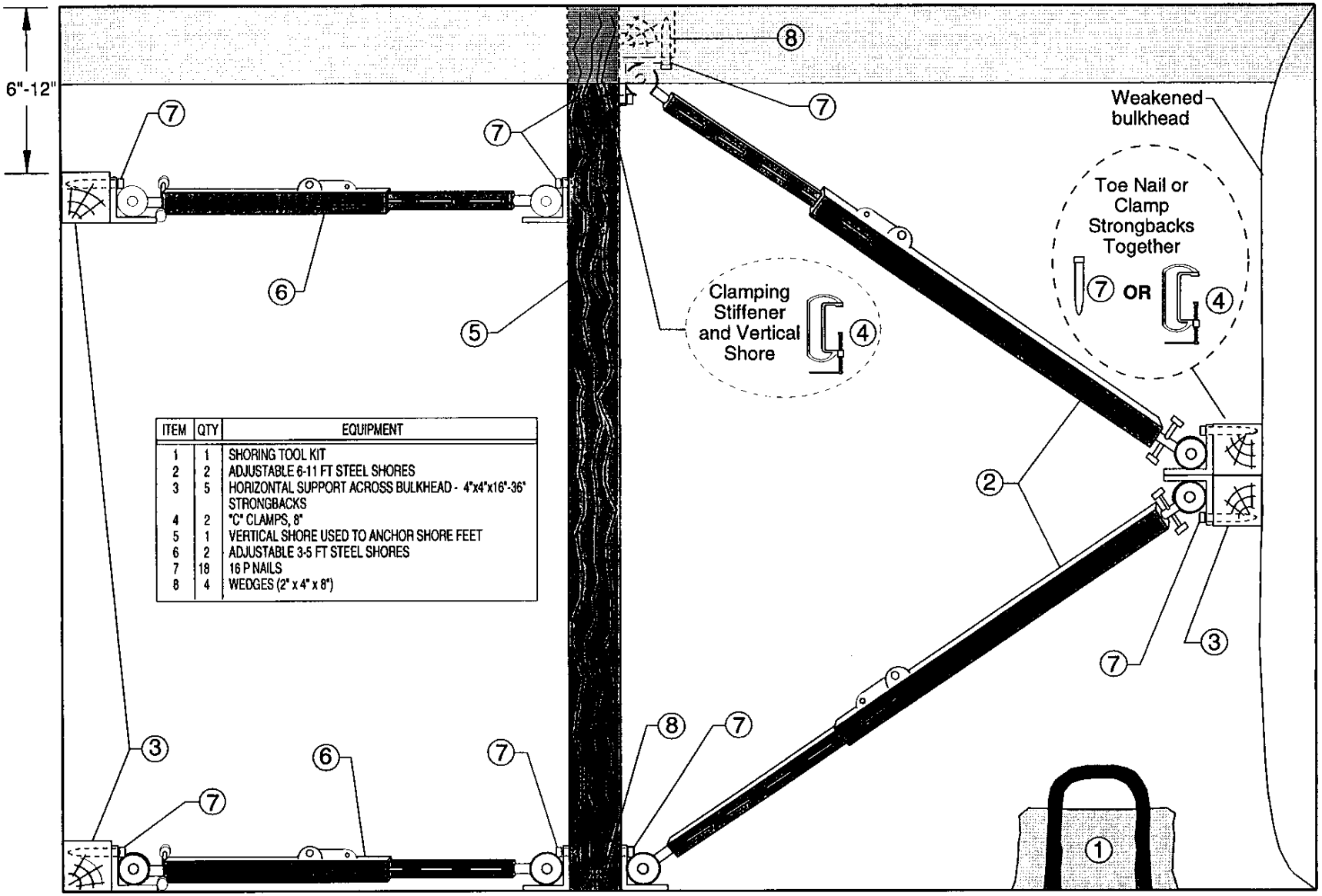

ITEM	QTY	EQUIPMENT
1	1	SHORING TOOL KIT
2	2	ADJUSTABLE 6-11 FT STEEL SHORES
3	5	HORIZONTAL SUPPORT ACROSS BULKHEAD - 4"x4"x16"-36" STRONGBACKS
4	2	"C" CLAMPS, 8"
5	1	VERTICAL SHORE USED TO ANCHOR SHORE FEET
6	2	ADJUSTABLE 3-5 FT STEEL SHORES
7	18	16 P NAILS
8	4	WEDGES (2" x 4" x 8")

SHORING EVOLUTION - SKETCH #005
I and K-Type Shoring Using Adjustable 3-5 and 6-11 Foot Metal Shores

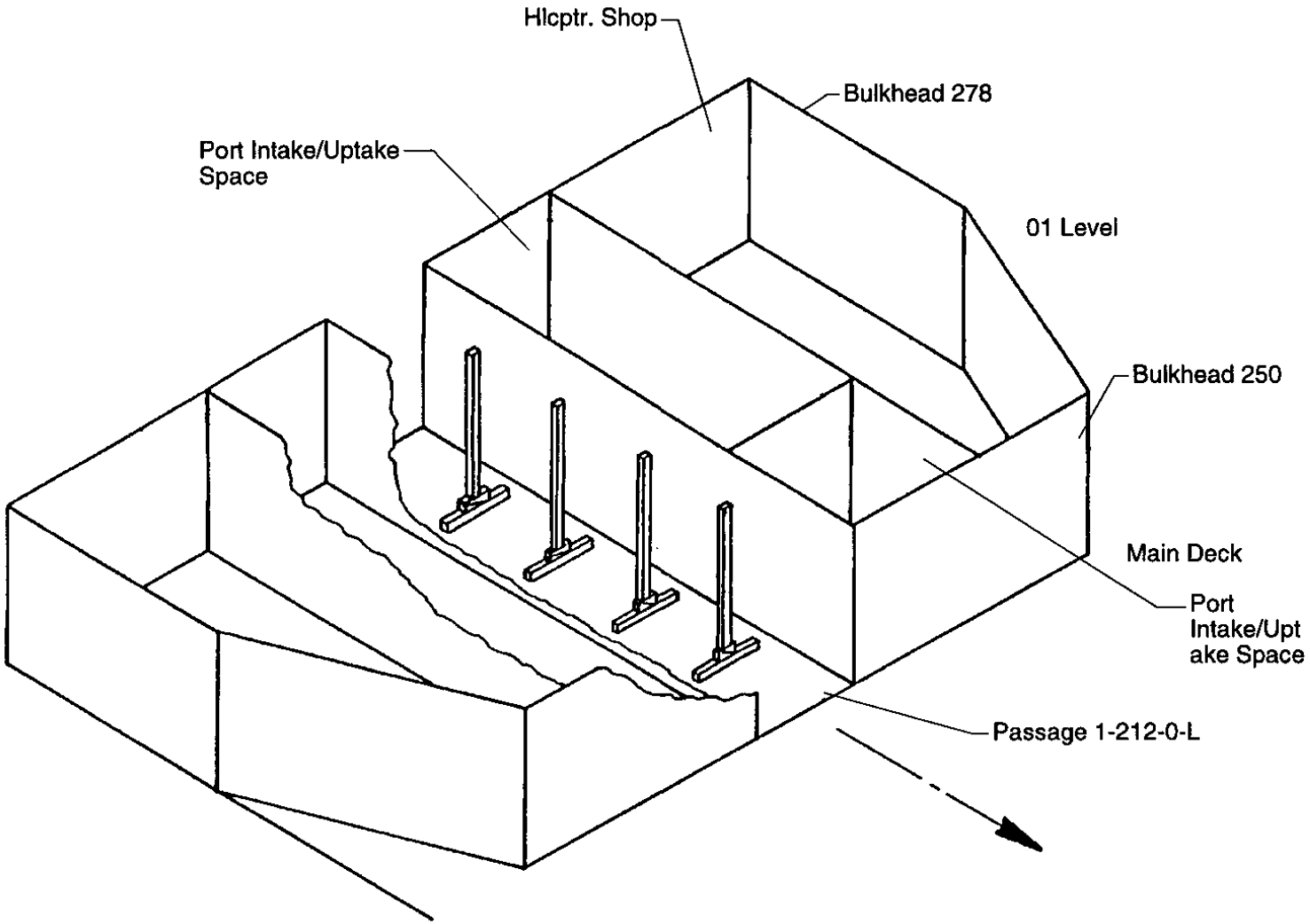

SHORING EVOLUTION - SKETCH #006
I-Type Shoring as Erected in Passage on USS SAMUEL B. ROBERTS (FFG 58)

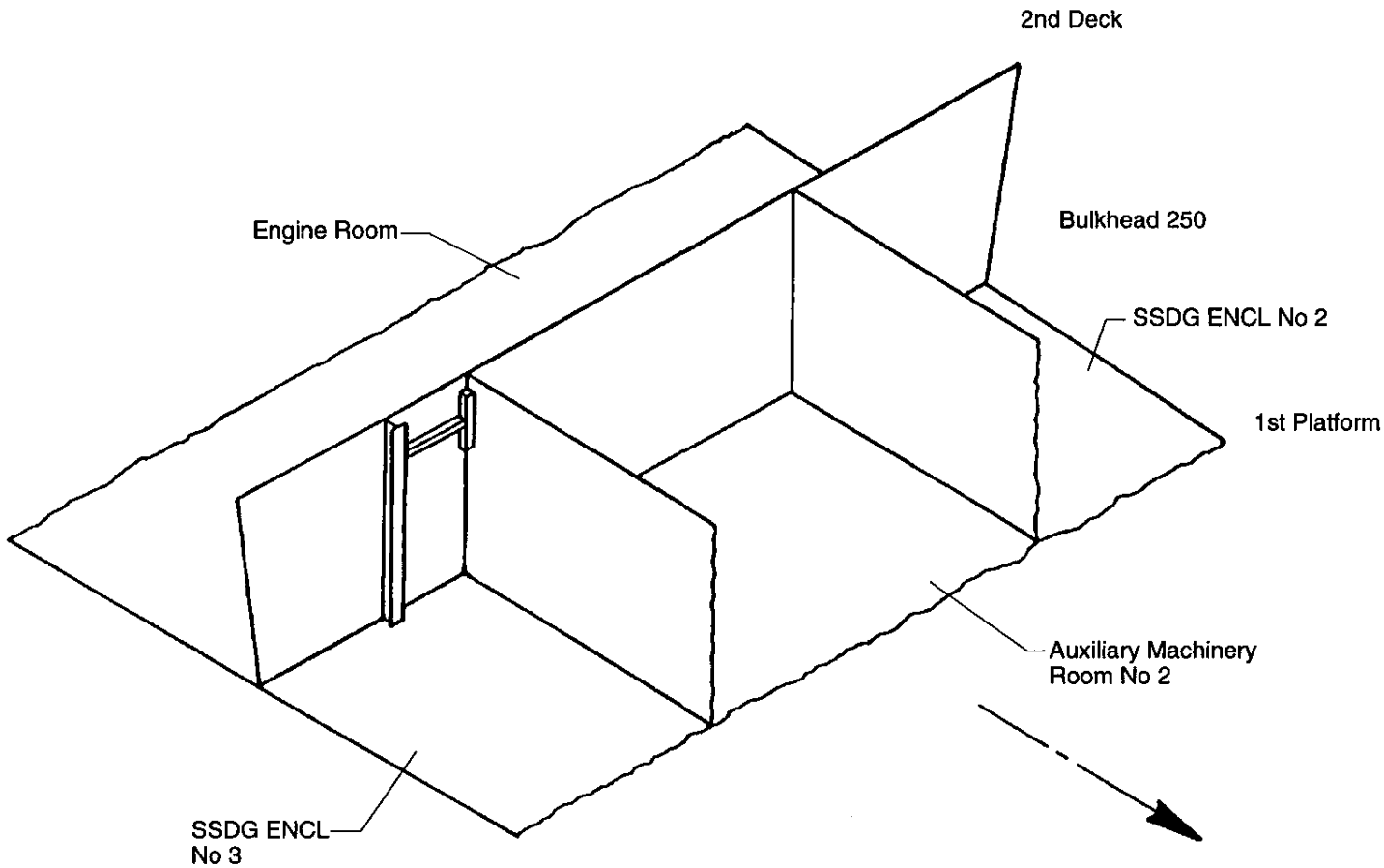

SHORING EVOLUTION - SKETCH #007
Shoring Split Seam After Bulkhead of Auxiliary Machinery Room on USS SAMUEL B. ROBERTS (FFG 58)

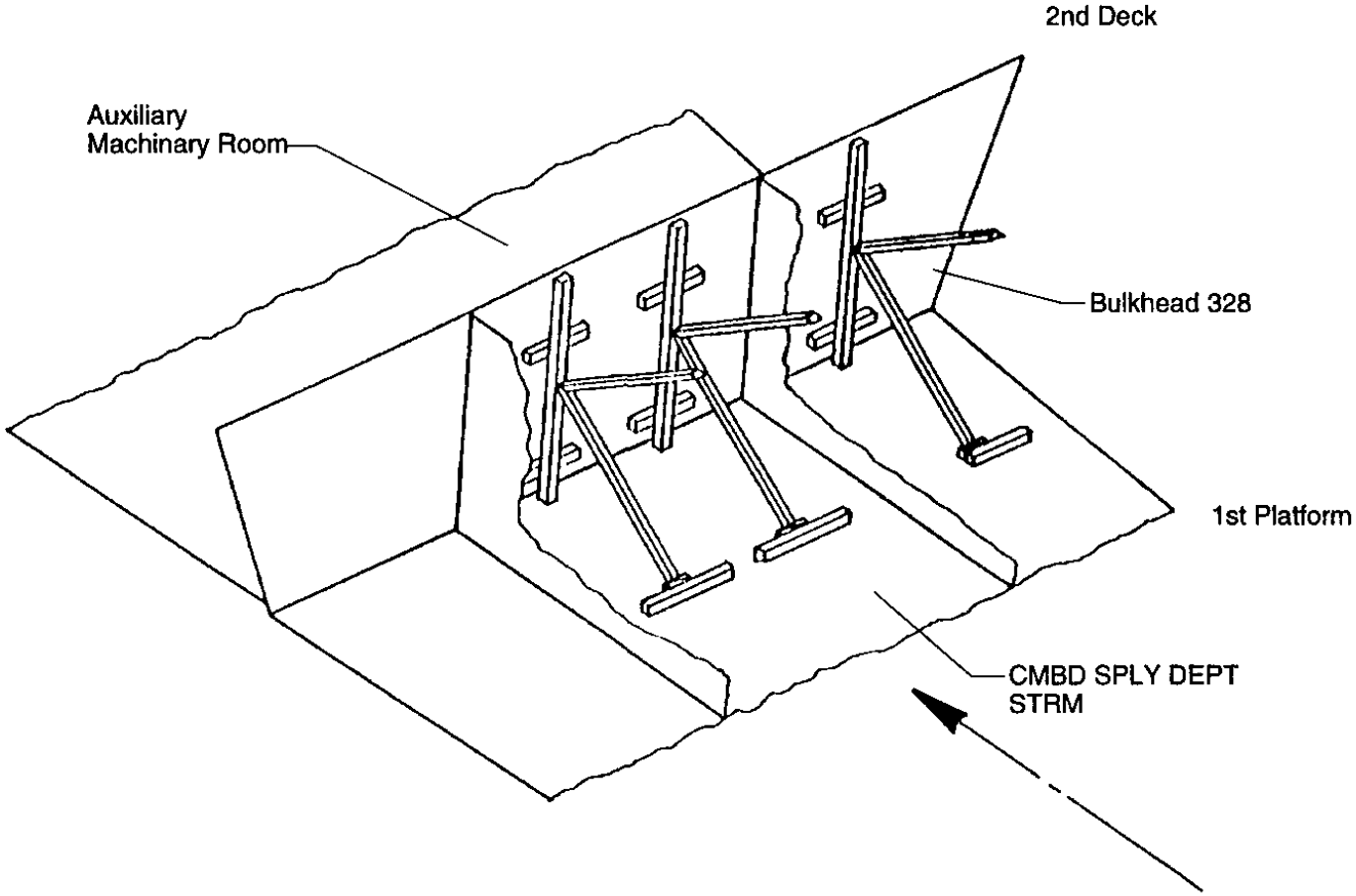

SHORING EVOLUTION - SKETCH #008
K-Type Shoring Forward Bulkhead in CMBD SPLY DEPT STRM - USS SAMUEL B. ROBERTS (FFG 58)

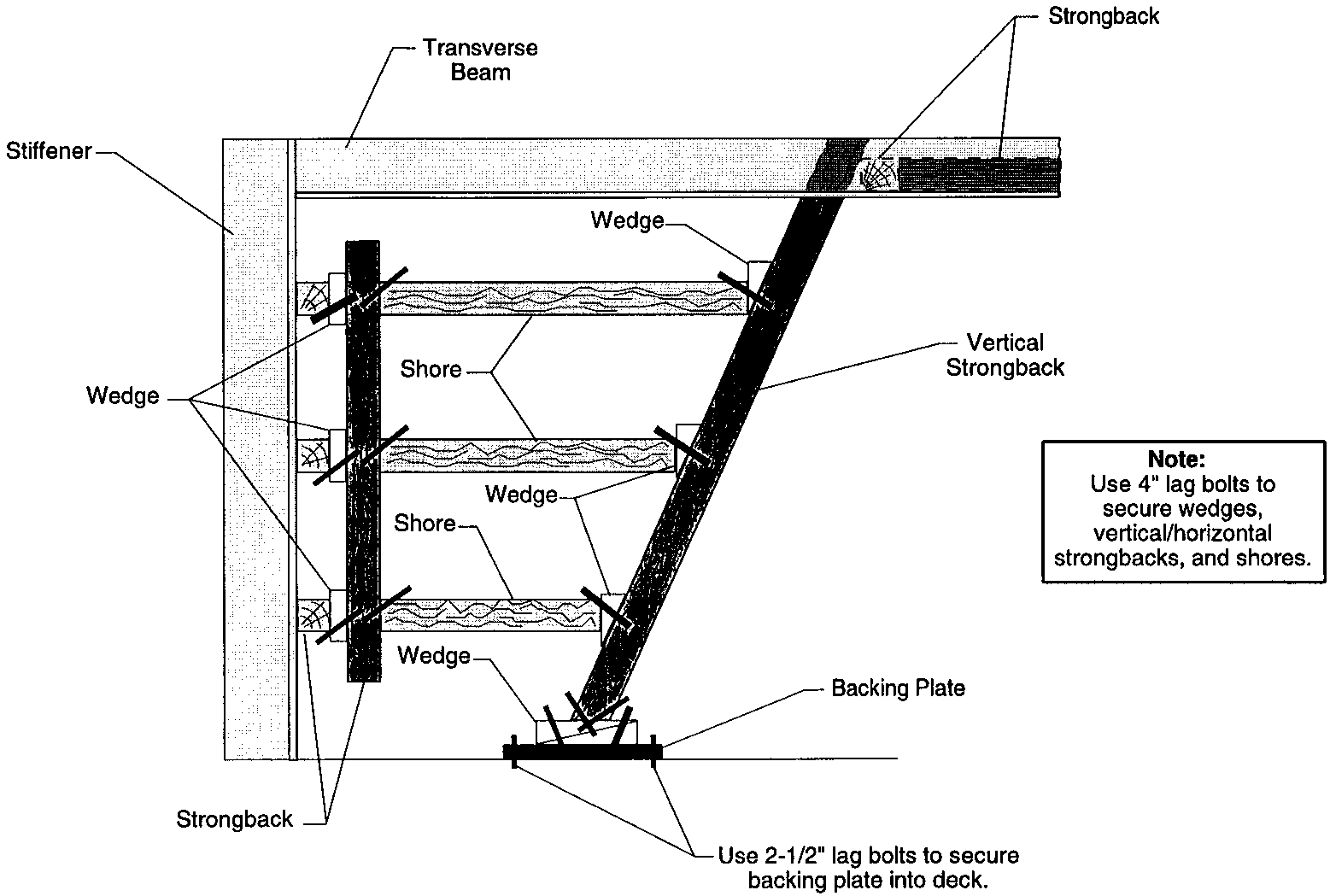

SHORING EVOLUTION - SKETCH #009
H-Type Shoring with Wooden Shores

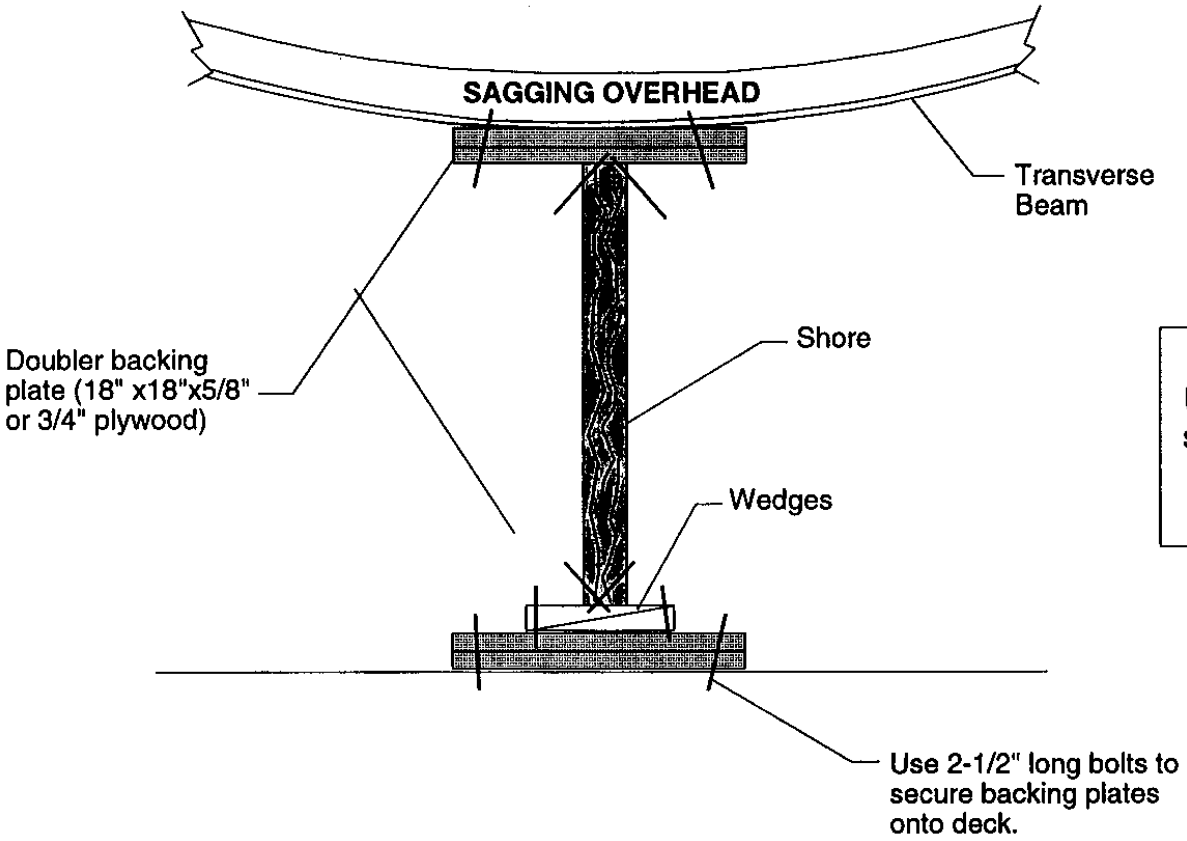

NOTE:
Use 4" long bolts to secure wedges and shore onto backing plates.

SHORING EVOLUTION - SKETCH #010
I-Type Shoring Using Wood Shore to Support Sagging Overhead on Mine Warfare Class Ships

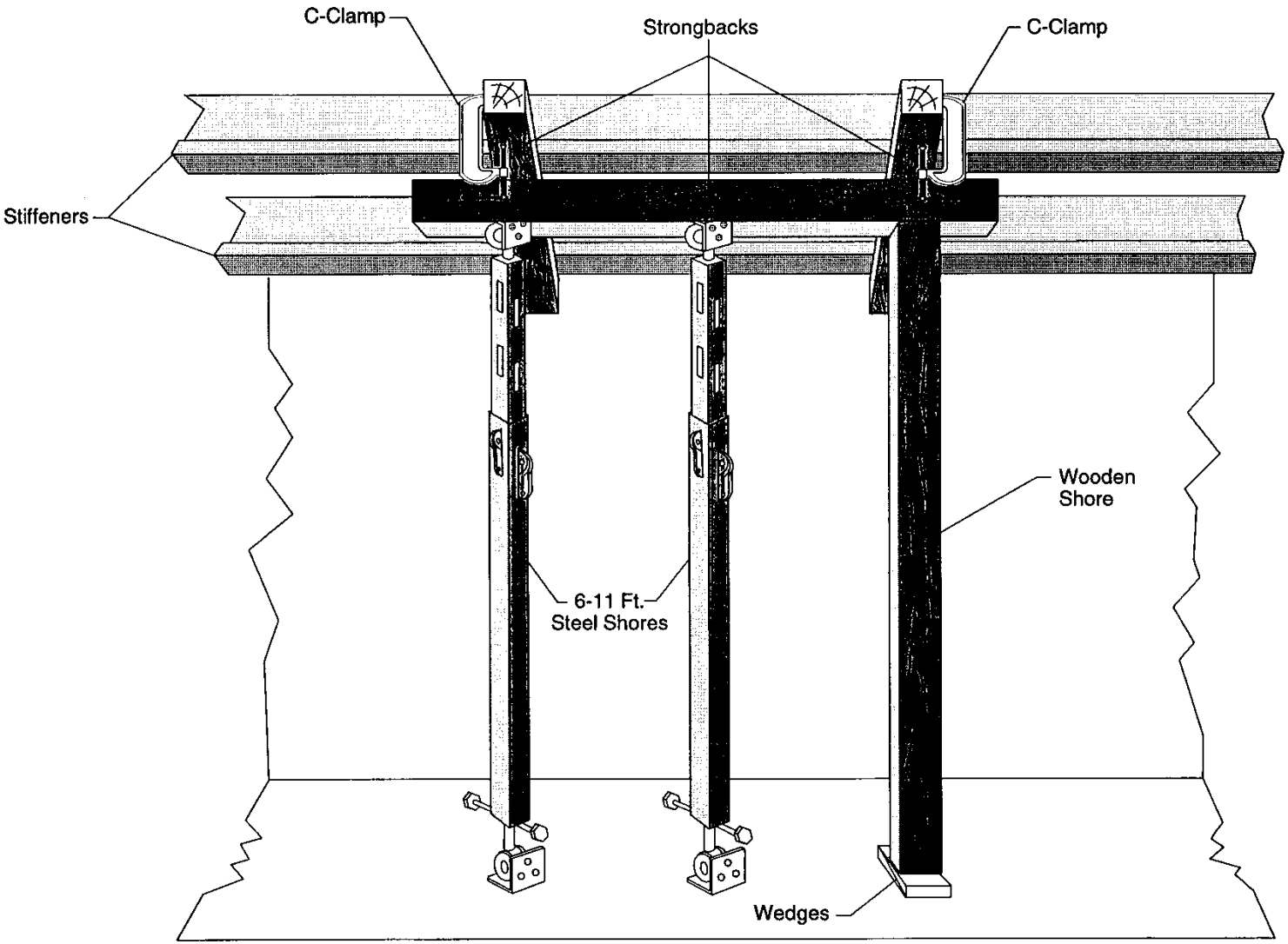

SHORING EVOLUTION - SKETCH #011
I-Type Shoring Using Multiple Combination of 6-11 Foot Metal Shores and Wooden Shore to Support Overhead Deck or Load

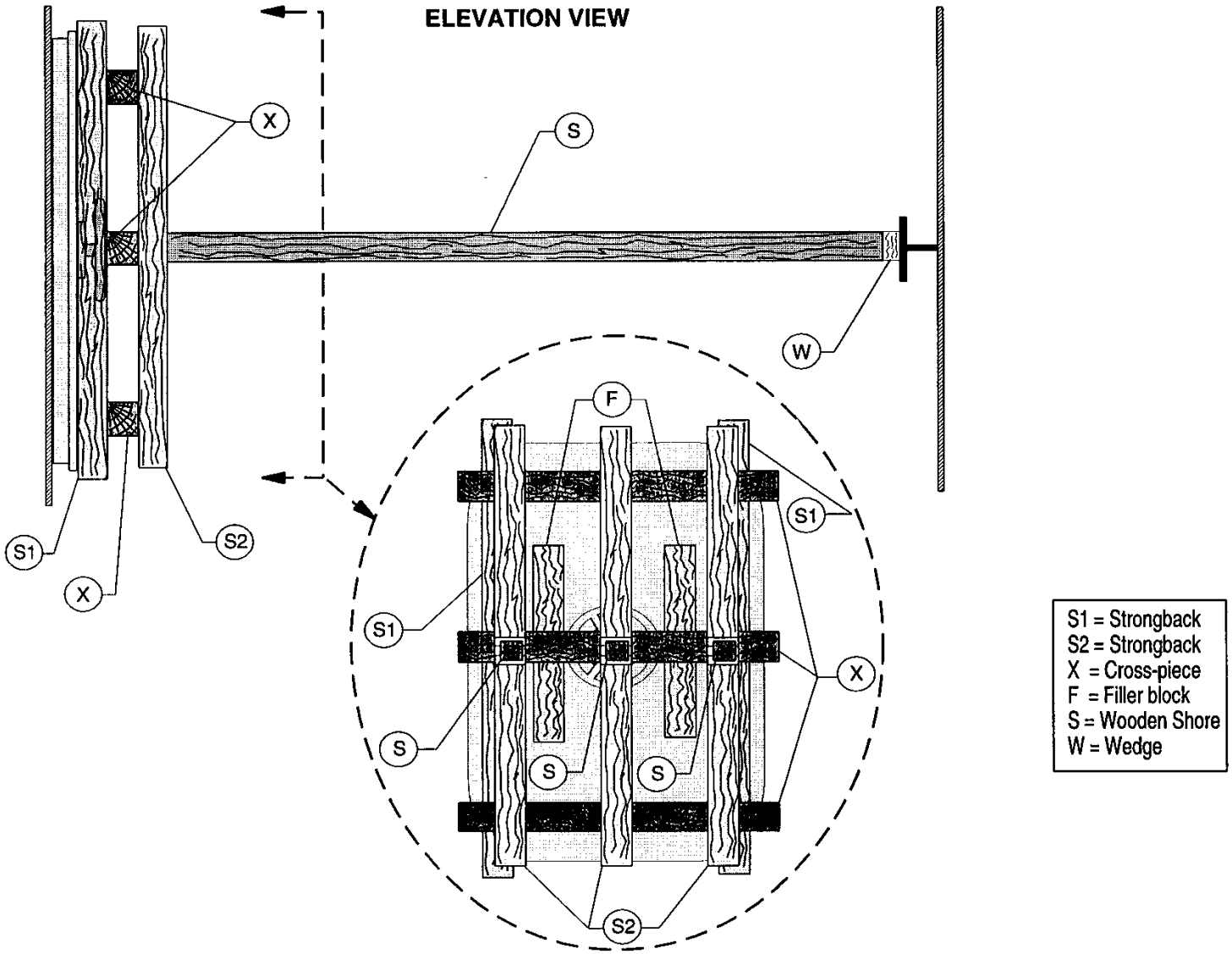

SHORING EVOLUTION - SKETCH #012
I-Type Shoring on Watertight Door Using Wooden Shores

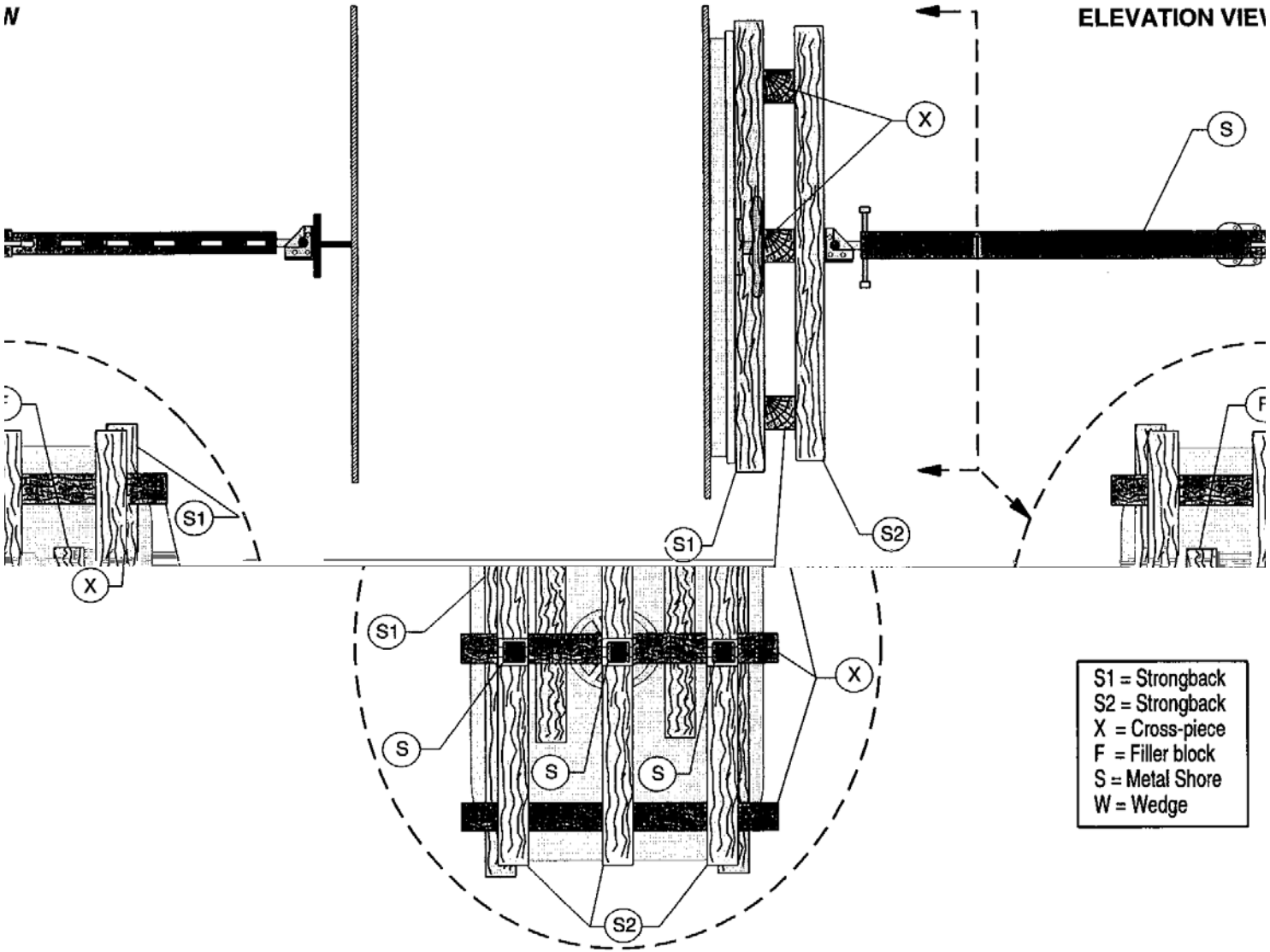

SHORING EVOLUTION - SKETCH #013
I-Type Shoring on Watertight Door Using Metal Shores

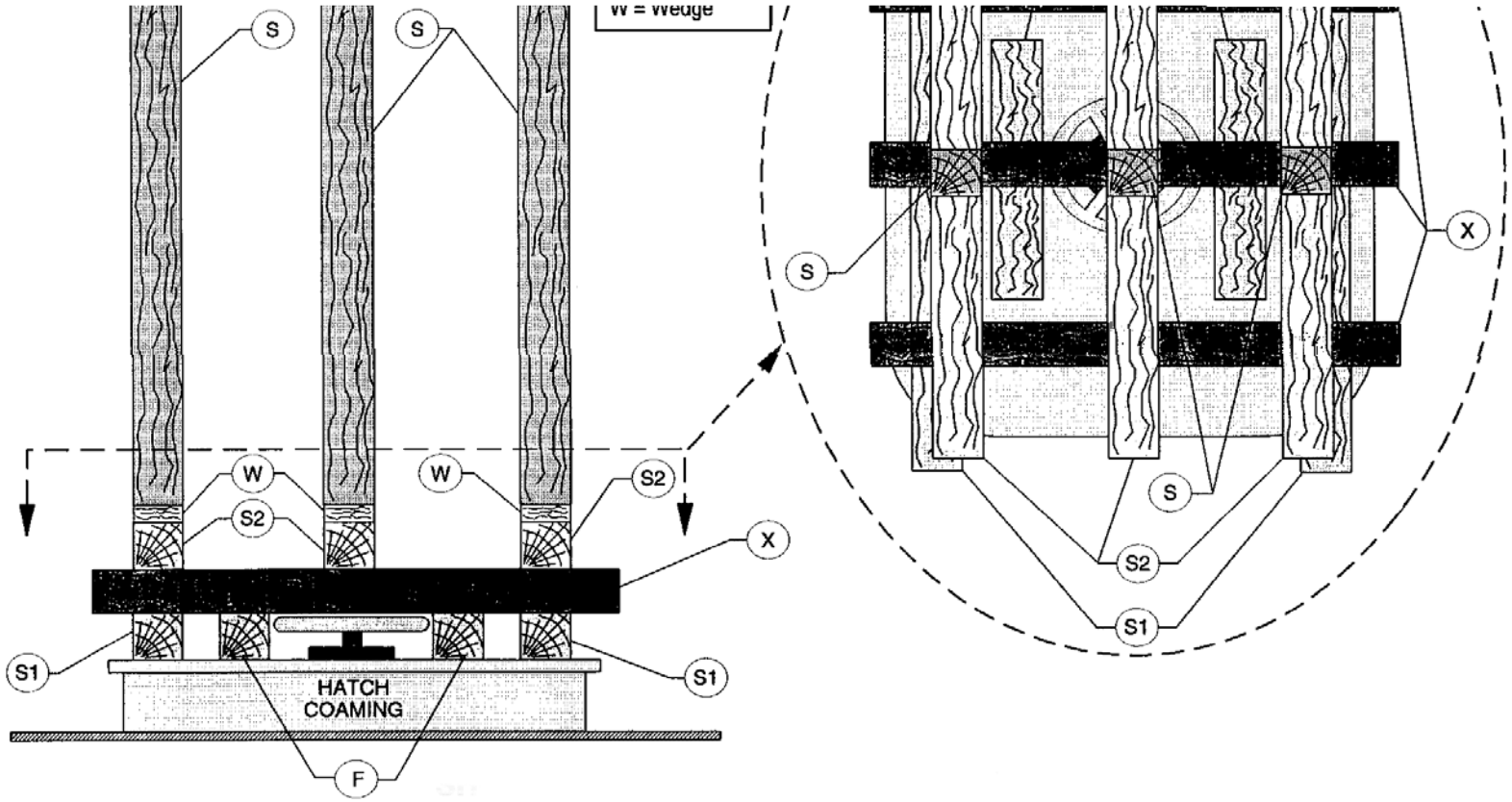

SHORING EVOLUTION - SKETCH #014
I-Type Shoring on Hatch with Scuttle Using Wooden Shores

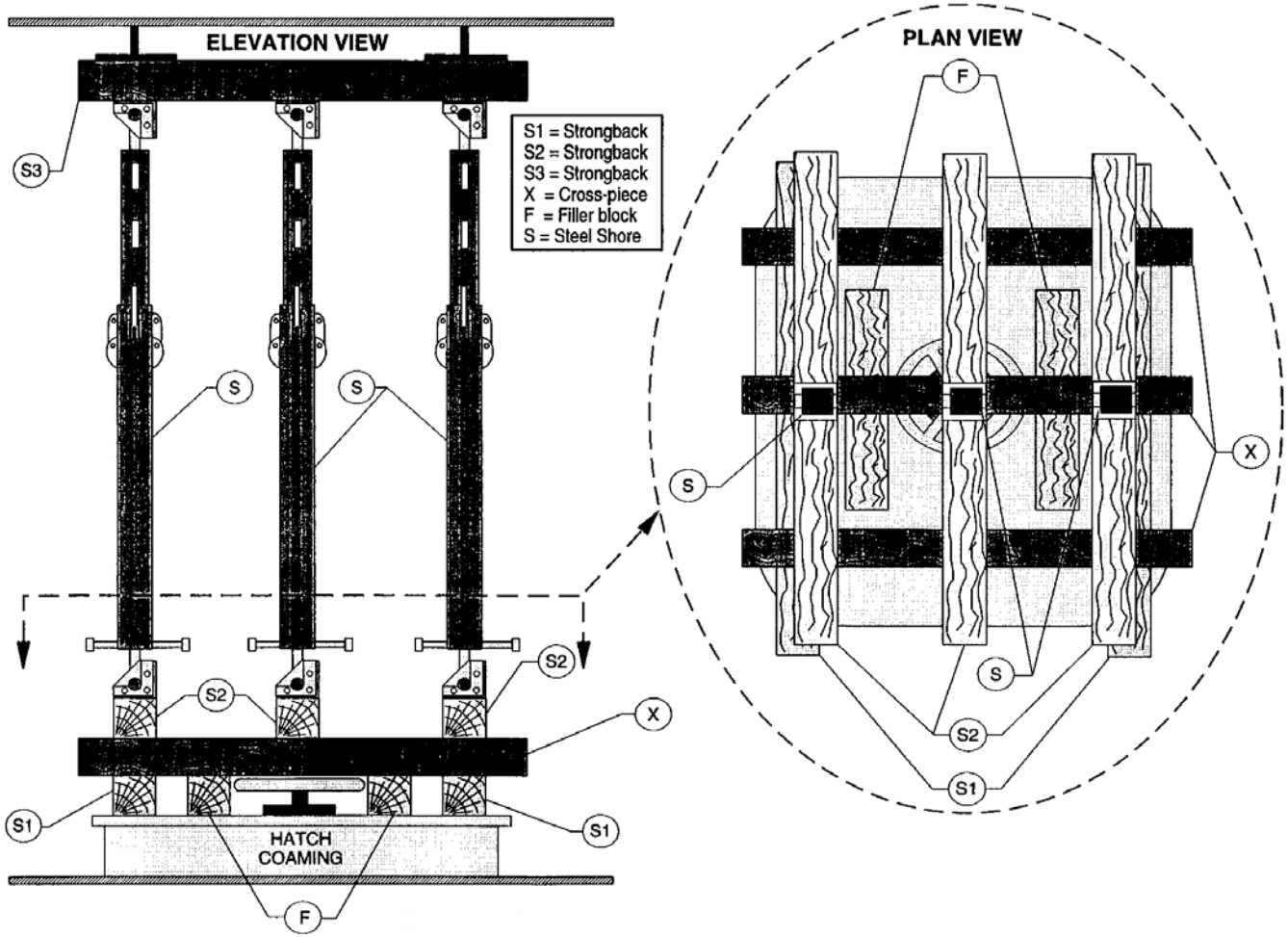

SHORING EVOLUTION - SKETCH #015
I-Type Shoring on Hatch with Scuttle Using Metal Shores

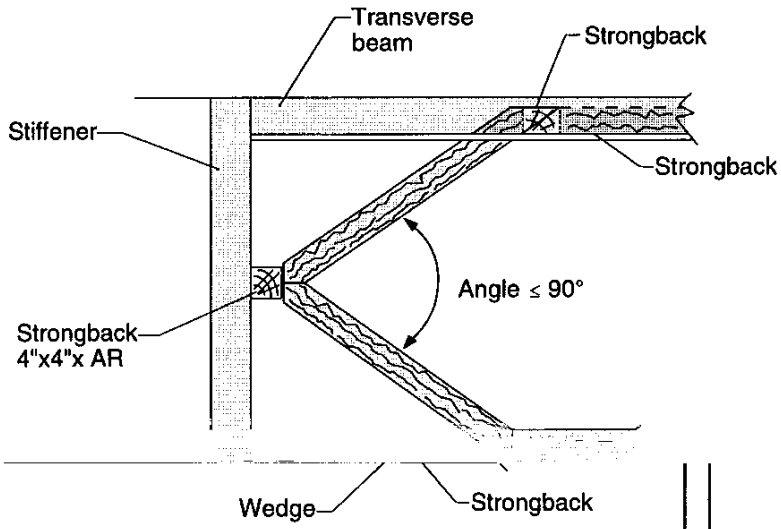

K-Type Shoring Using Two (2) Wooden Shores

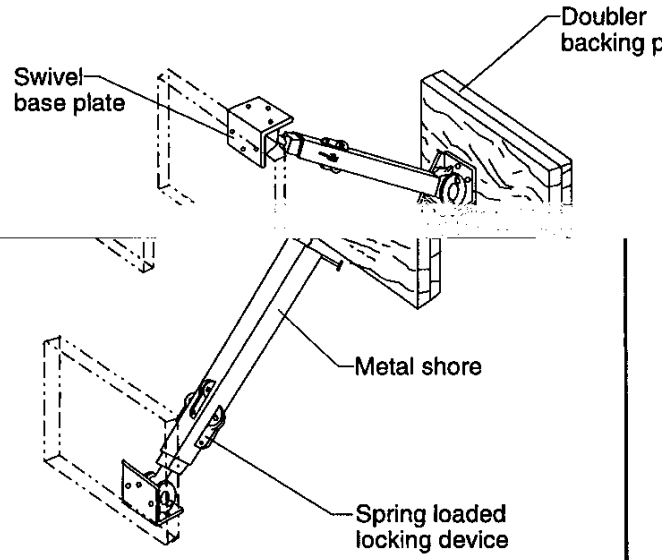

K-Type Shoring Using Two (2) 3-5 Ft. or 6-11 Ft. Metal Shores

SHORING EVOLUTION - SKETCH #016
K-Type Shoring

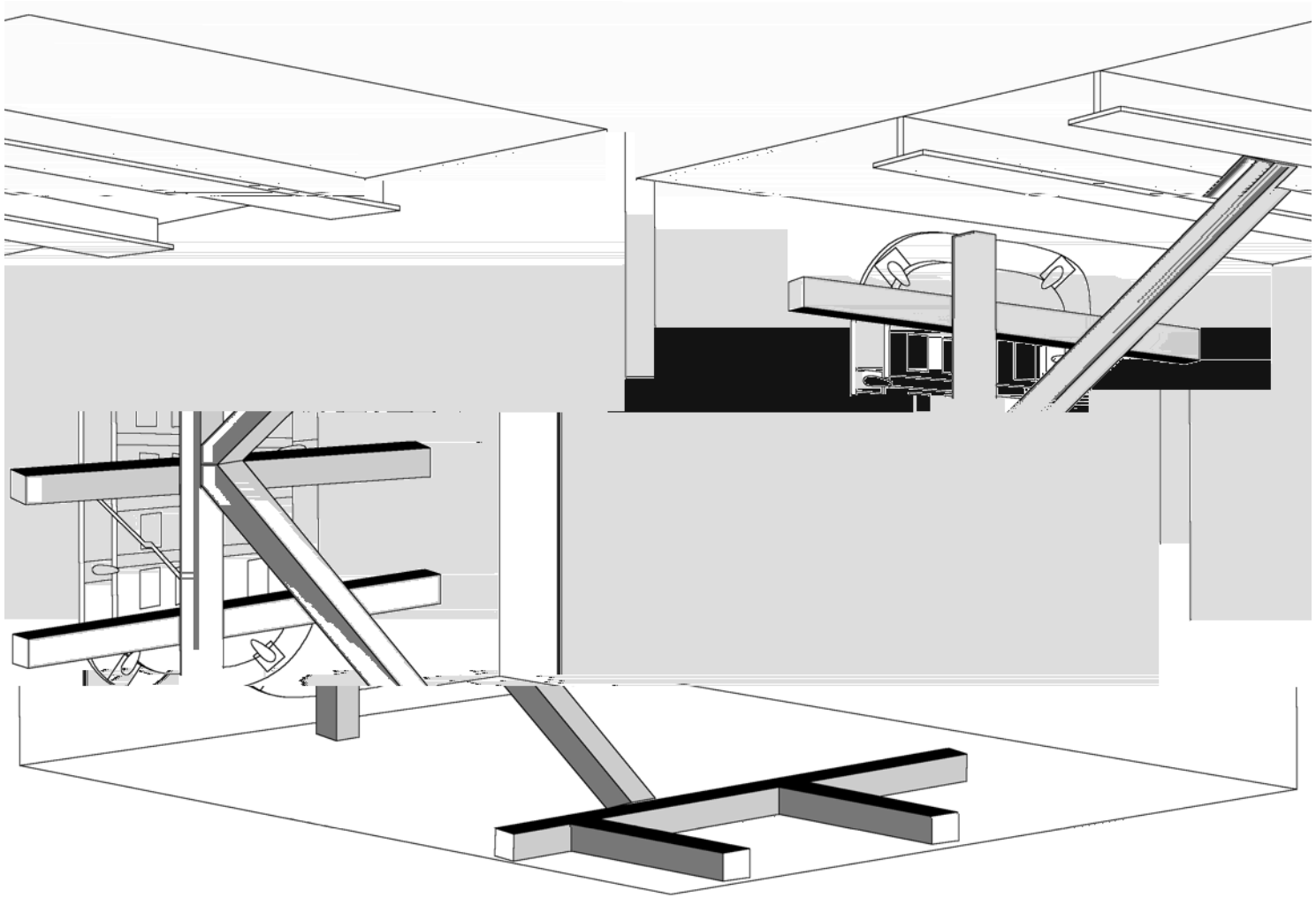

SHORING EVOLUTION - SKETCH #017
K-Type Shoring on Watertight Door Using Wooden Shores

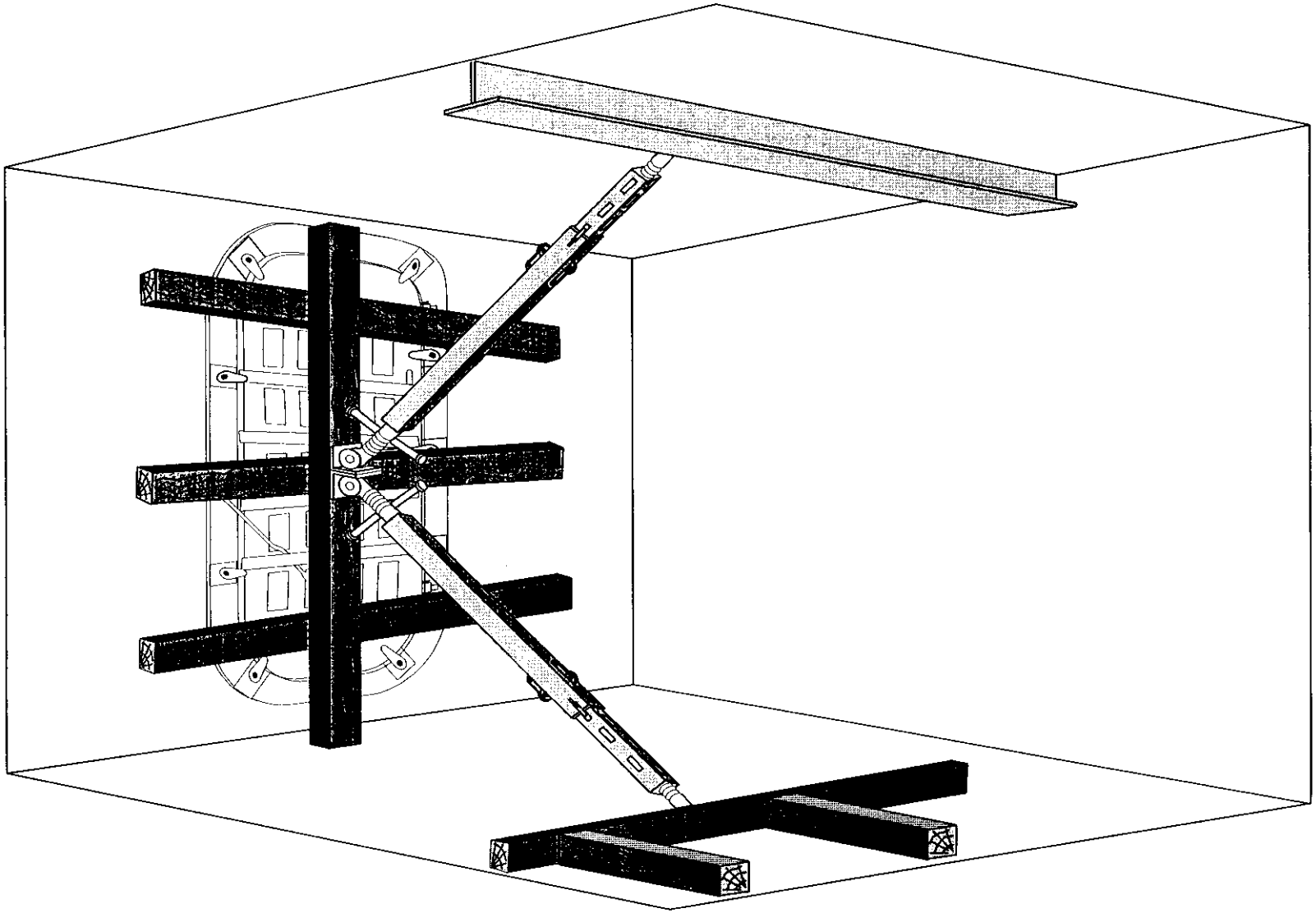

SHORING EVOLUTION - SKETCH #018
K-Type Shoring on Watertight Door Using Metal Shores

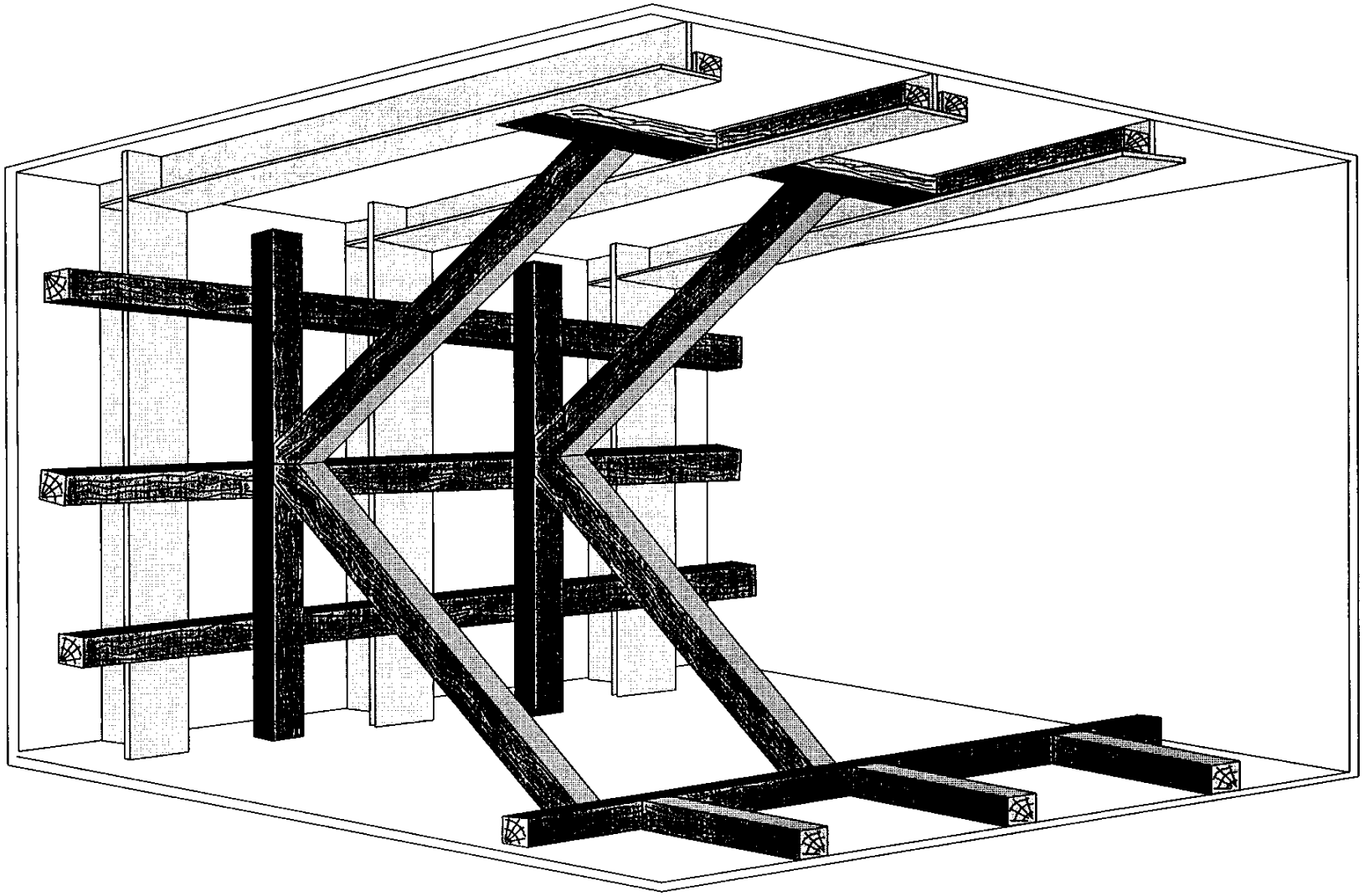

SHORING EVOLUTION - SKETCH #019
Distributing Bulkhead Pressure Over Stiffeners with K-Type Shoring
(Using Wooden or/and Metal Shores)

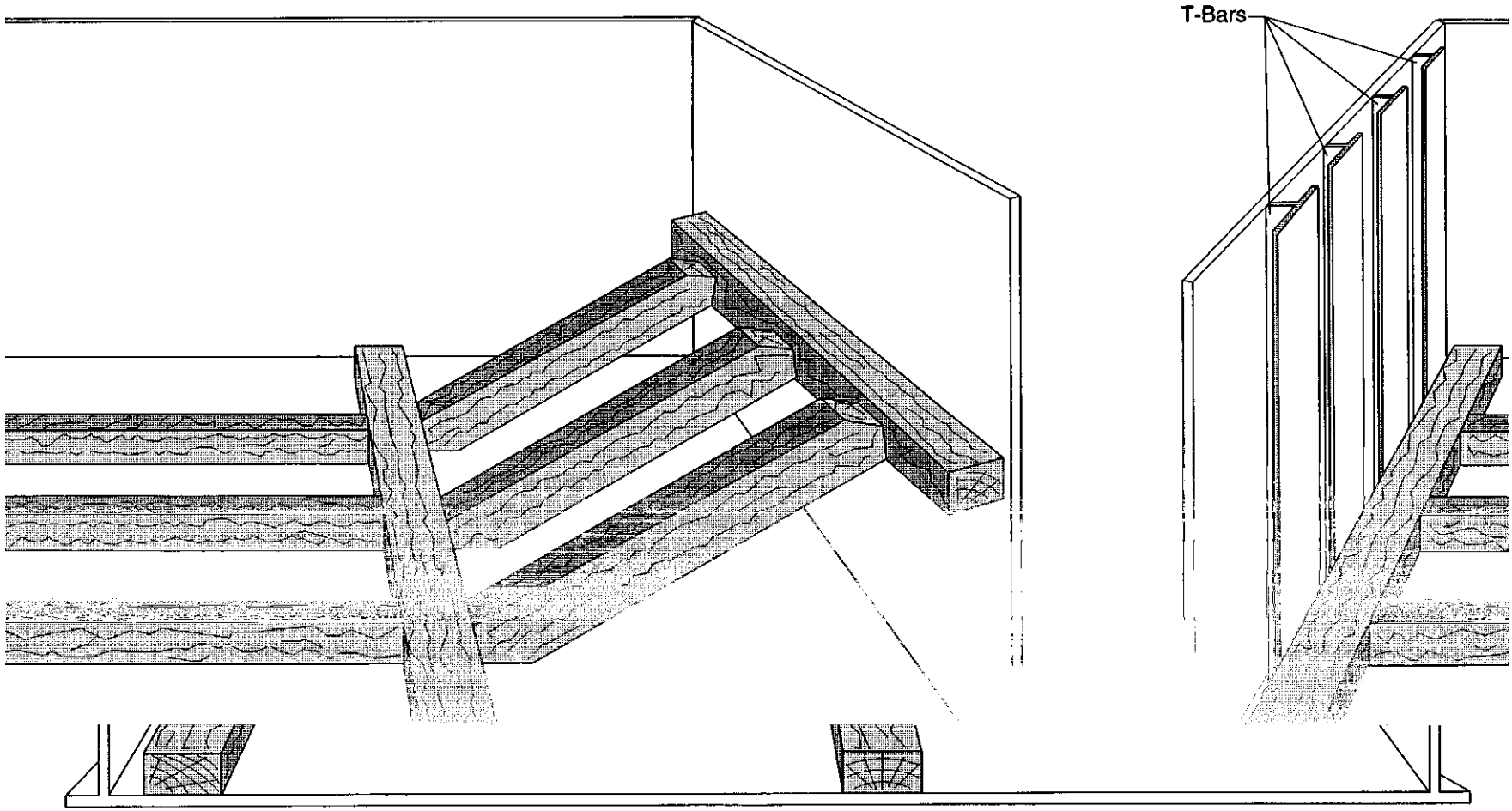

SHORING EVOLUTION - SKETCH #020
Compound Shoring

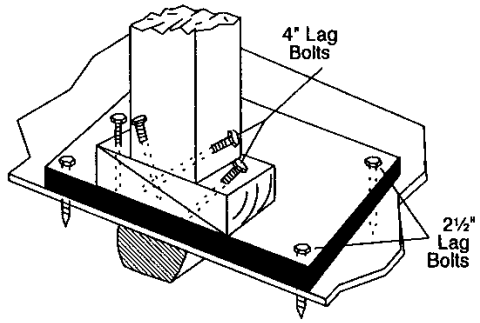

SHORING PRACTICE INVOLVING USE OF PAIR OF WEDGES BENEATH A SHORE, SECURED WITH 4" LAG BOLTS THROUGH WEDGES INTO DECK AND SECURING SHORE TO WEDGES.

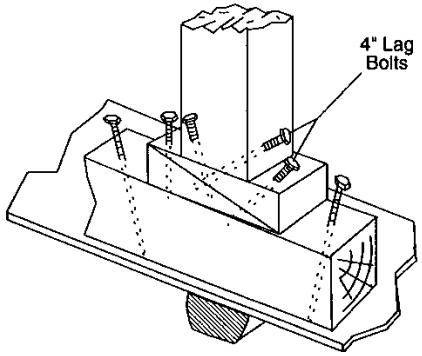

SHORING PRACTICE INVOLVING USE OF PAIR OF WEDGES BENEATH A SHORE, SECURED WITH 4" LAG BOLTS THROUGH WEDGES INTO BACKING PLATE AND SECURING SHORE TO WEDGES, BACKING PLATE WITH 2-1/2" LAG BOLTS.

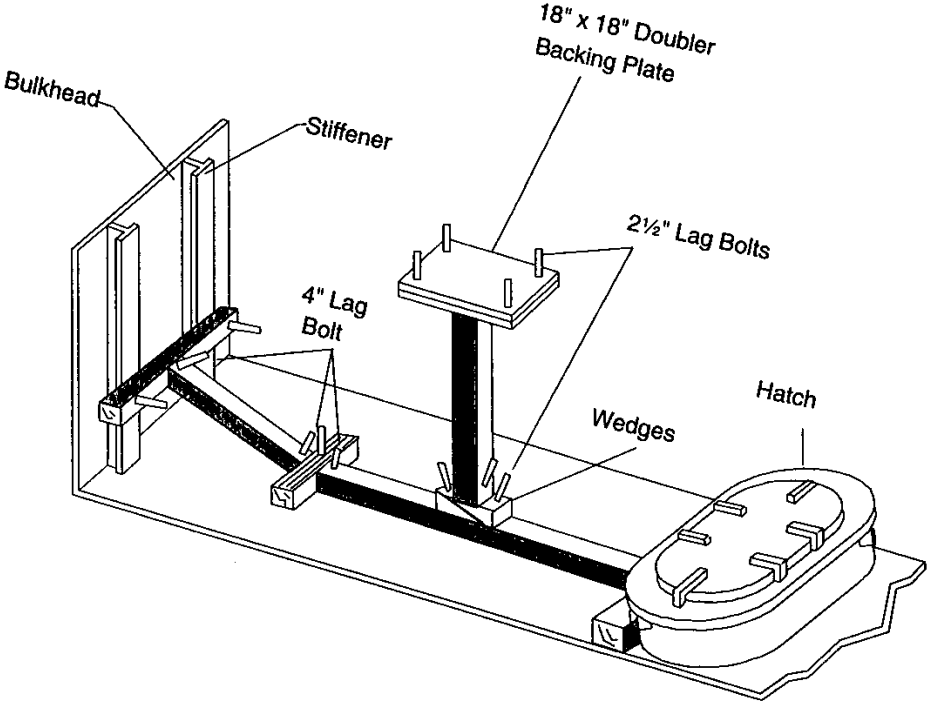

SHORING EVOLUTION - SKETCH #021

Shoring from Bulkhead to Hatch and Providing Support for Weakened Overhead on Mine Warfare Class Ships

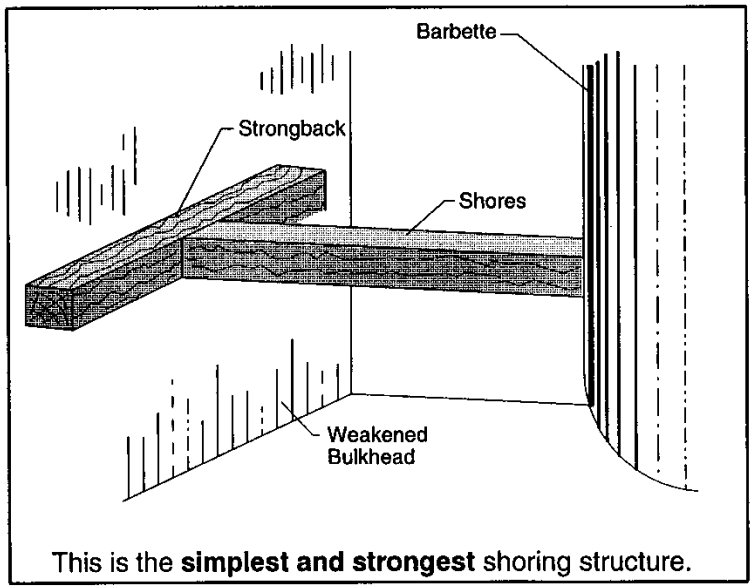

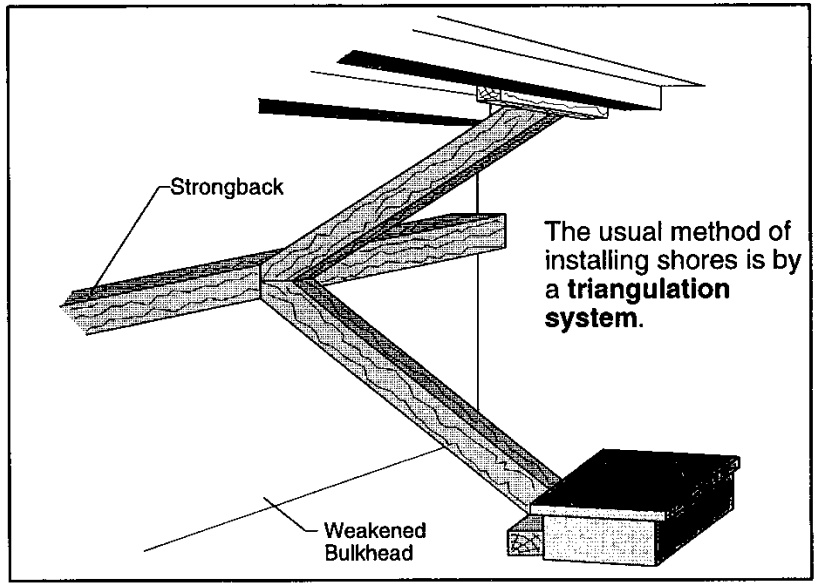

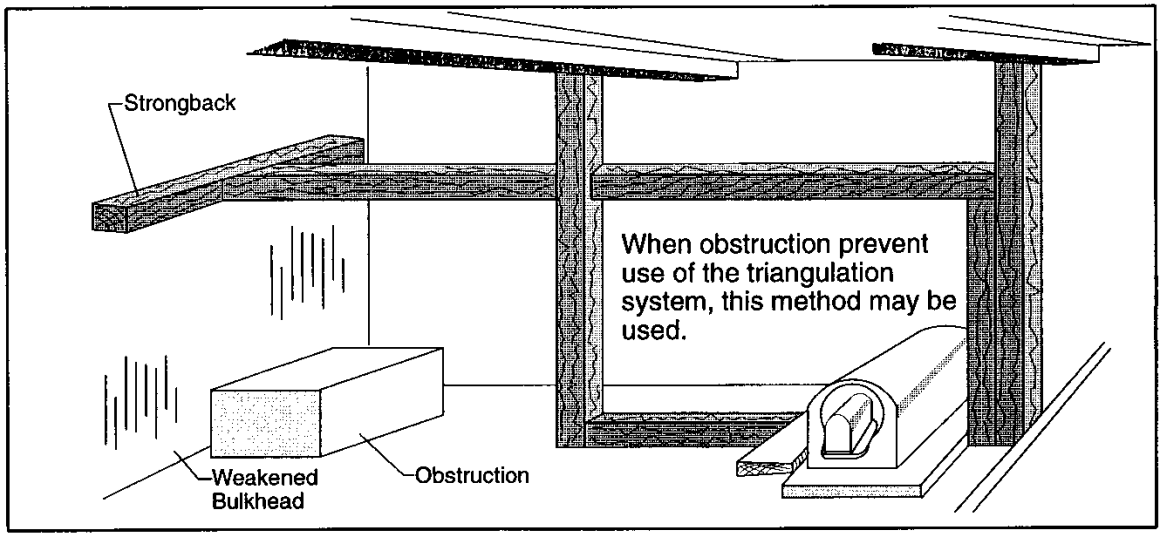

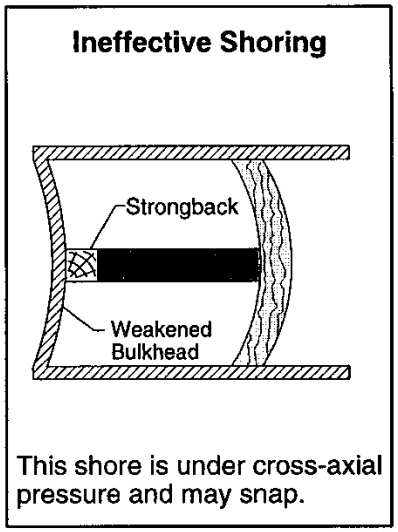

SHORING EVOLUTION - SKETCH #022
General Rules for Shoring Against Horizontal Pressure

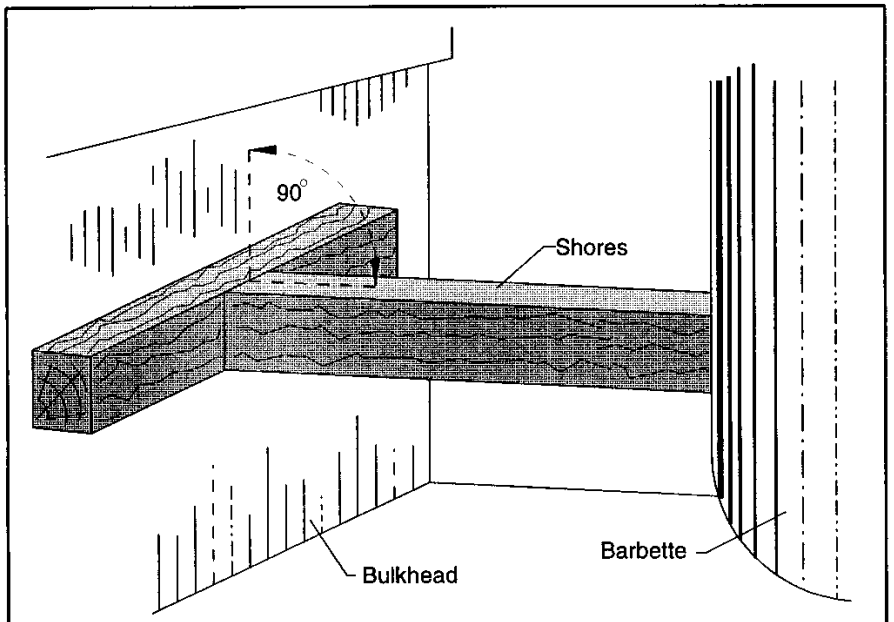

Shores perpendicular to bulkhead exert **maximum pressure**.

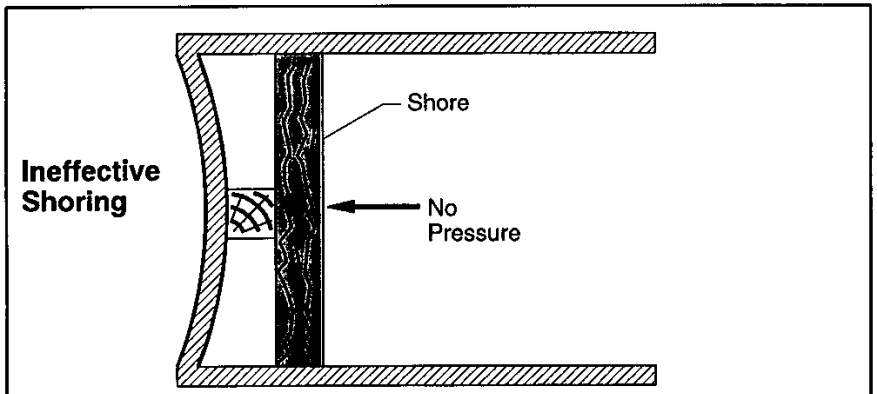

Shores parallel to bulkhead exert **no pressure**.

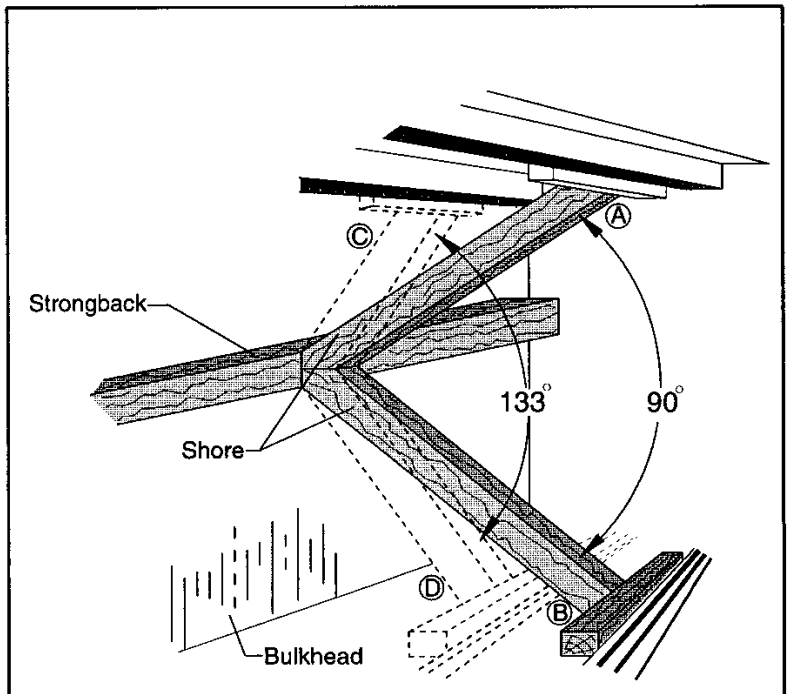

When the angle of the two (2) shores is greater than 90°, the effectiveness of the shores is lessened. Therefore, it is better to anchor shores at **A** and **B** than at **C** and **D**.

SHORING EVOLUTION - SKETCH #023
General Rules for Setting Correct Shoring Angles

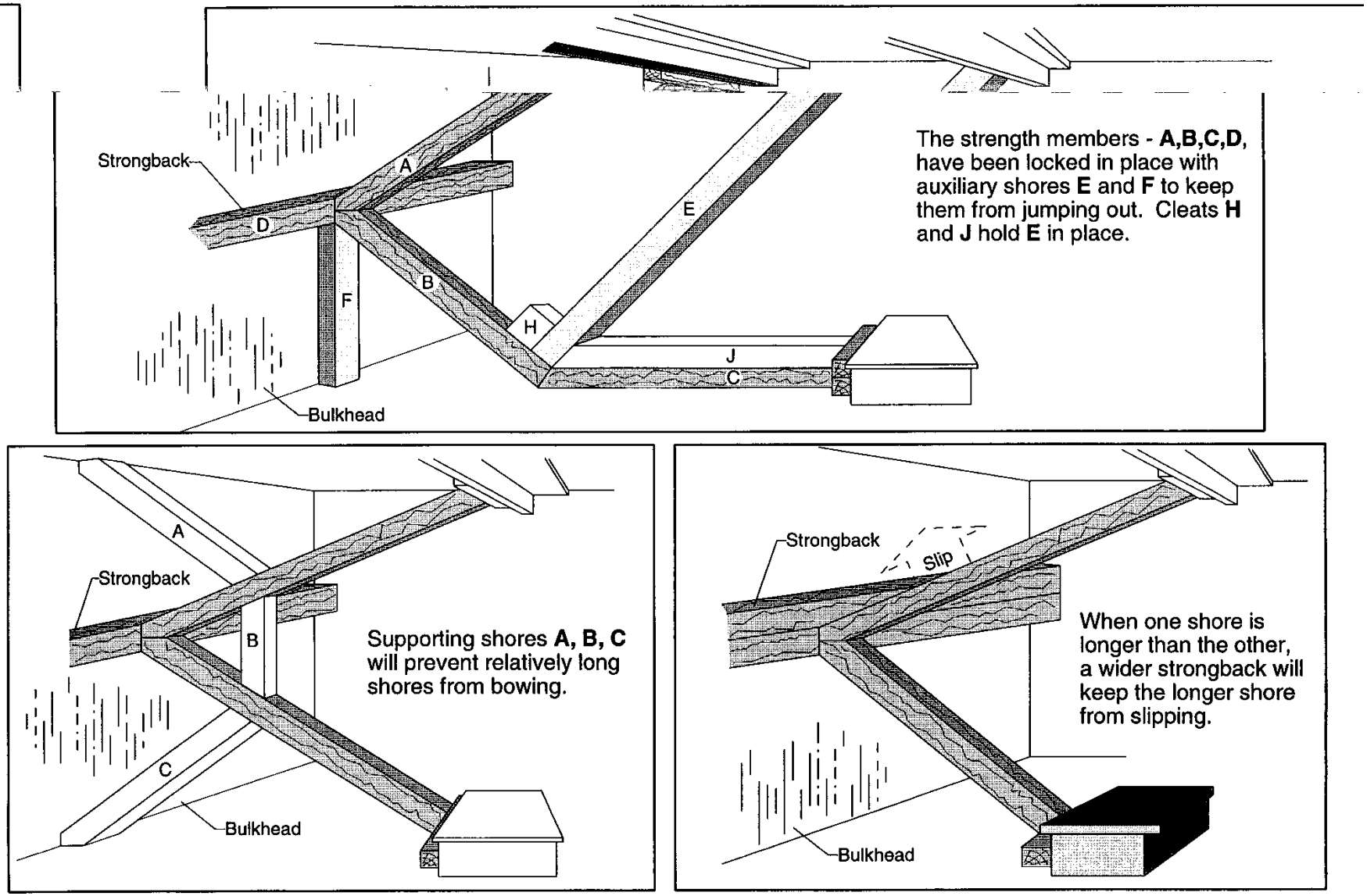

SHORING EVOLUTION - SKETCH #024
Strengthening Shores