REVISIONS				
ZONE	REV		DATE	APPROVAL
E5 A5 C4	D	REVISED REVISION STATUS BLOCK. MOVED NOTES TO SHT 3. ADDED NOTE. ADDED IT 33 THRU 37 TO PARTS LIST AND TO FIELD OF DRAWING. ADDED VIEW P	5/31/06	MJB

REVISIONS				
ZONE	REV	DESCRIPTION	DATE	APPROVAL
	–	ORIGINAL ISSUE WITH SIGNATURES	5/19/97	
	A	IN SECTION L–L, MODIFIED SPRING CLIP AND FOOTPLATE CONFIGURATION ON WALKAWAY BRACKET IT. 24 TO FIT SCOTT AIR–PAK 4.5. REVERSED LOCATION OF SCBA AND CYLINDER; NO. REQ FOR IT. NO. 28 WAS 8; ADDED "SEE NOTE 11" TO IT. NO. 17 & 18; ADDED NOTE 11; ADDED NOTE AT 8D; ADDED FIELD WELD AT DETAIL A REVISED NOTE 7 AND ADDED NOTE 12	7/30/97	DM
	B	IN DETAIL B, ADDED FILLET WELD AND DECREASED RIVET SPACING FROM 6" TO 4". REVISED NOTE 7.	9/3/97	DM
B5 A1	C	IN SECTION L–L, ADDED IT. 7 & 31 AND CORRECTED HOLE LOCATIONS. ADDED SHEET 3 AND REVISED REVISION STATUS BLOCK. ADDED NOTES 13 & 14. REVISED NOTES 6 & 11 AND NOTES ABOUT RIVETING. ITEM 5 DIMENSION WAS 1.62. IN PARTS LIST, ADDED ITEMS 30, 31 & 32, ITEMS 17 & 18 WERE FLUSH HEAD, ITEM 17 GRIP RANGE WAS .251–.312, ITEMS 2, 3, 4, 6 & 7 MATERIAL WAS 5086–H111 AND ADDED "SEE NOTE 13", ADDED CRES HDWR AT ITEMS 24 & 25. DELETED HOLE TOLERANCE IN IT. 1.	5/1/98	DM

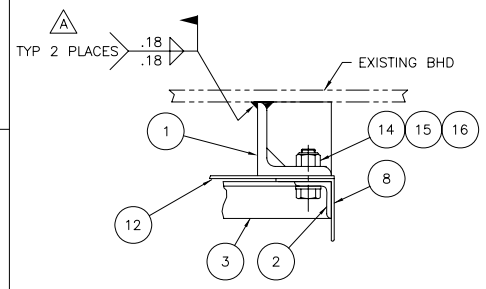

DETAIL A
SCALE: 1/2

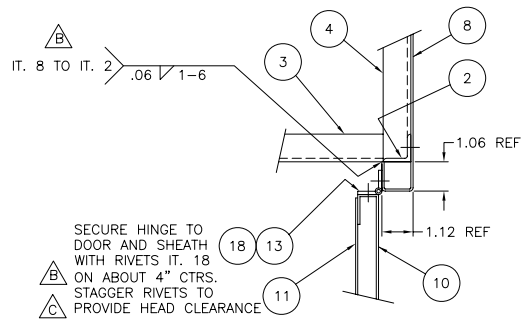

DETAIL B
DOOR HINGE DETAIL
SCALE: 1/3

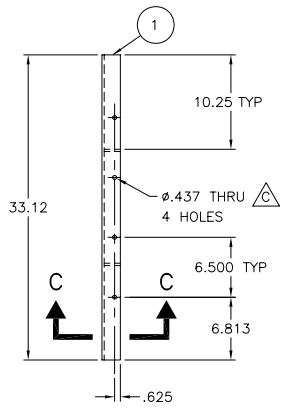

BULKHEAD FOUNDATION WELDMENT
TWO REQUIRED

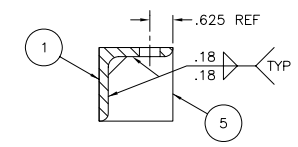

SECTION C–C
SCALE: 1/2

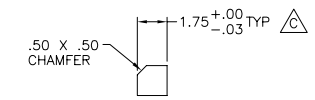

5 GUSSET
SCALE: 1/4

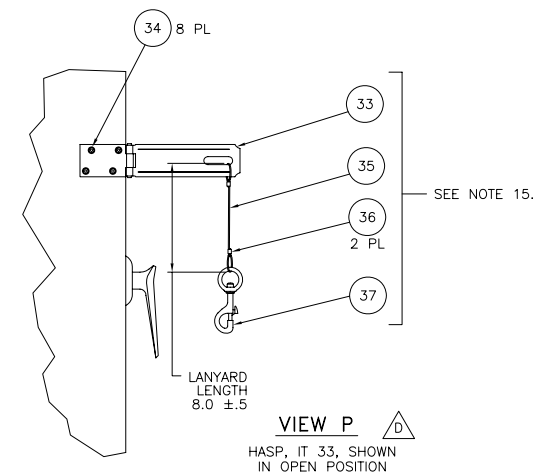

VIEW P D
HASP, IT 33, SHOWN
IN OPEN POSITION

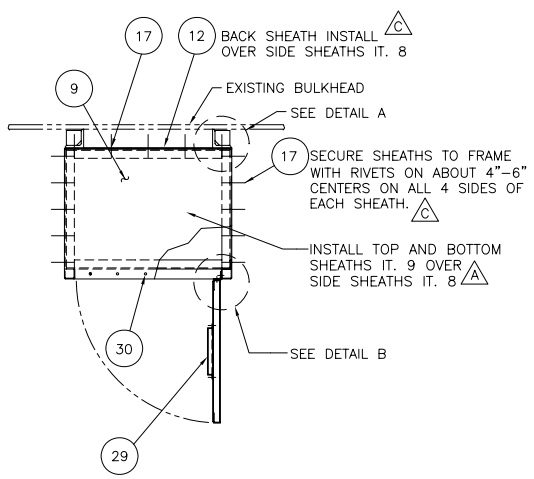

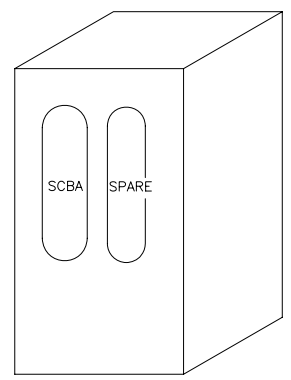

MDL–4
1 SCBA UNIT & 1 SPARE CYLINDER A
(30 OR 45 MIN)

	NO. REQ	ITEM NO.	DESCRIPTION	MATERIAL	MATL SPEC	REMARKS	REF DWG
D	1	37	SNAP, SWIVEL	BRONZE	SEE NOTE 17. P/N: 3913T71		
D	2	36	SLEEVE, SWAGING	305 SS	SEE NOTE 17. P/N: 3755T13	CABLE SIZE: ø.06 SEE NOTE 15.	
D	1	35	LANYARD	305 SS	SEE NOTE 17. P/N: 3458T75	ø.06 12.0 LONG SEE NOTE 15.	
D	8	34	RIVIT, SELF–SEALING	ALUMINUM/ STEEL	HANSON RIVIT CO. LOS ANGELES CA. 90065–1318 P/N: AD84H	DOME HEAD .25 BODY DIA GRIP: .126–.250	
D	1	33	HASP, SAFETY	ZINC PLATED STEEL W/ ALUM PIN	NATIONAL MANUFACTURING CO. STERLING, IL 61081 P/N: N102–459		
C	2	32	DOOR BUMPER	RUBBER	SEE NOTE 17. P/N: 9305K23	ø.625 HEAD .094 HEAD HEIGHT ø.406 STEM .406 LENGTH	
C	4	31	MACHINE SCREW, 82° FLAT HD PHILLIPS, .250–20UNC–2A X .75 LG	CRES COML	PER ANSI STD B18.2.1		
C	AR	30	ø.125 DOME HD RIVET .188–.250 GRIP RNG	CRES	COML	SEE NOTE 11	
	1	29	TAG HOLDER .080 THK SHEET	ALUM ALLOY	5052	SEE SHEET 2	
A	16	28	FLAT WASHER FOR .250 BOLT	CRES COML	PER ANSI STD B18.22.1		
	8	27	NUT, HEX SELF LOCK .250–20UNC–2B	CRES COML	PER ANSI STD B18.2.2		
	8	26	BOLT, HEX HD, .75 LG, .250–20UNC–2A	CRES COML	PER ANSI STD B18.2.1		
C	2	25	SHORT FOOTPLATE	PLASTIC–COATED STEEL	ZIAMATIC CORP., YARDLEY, PA 19067, MODEL NO. NSF, PART NO. 1010–030–000	SHORT FOOTPLATE FOR INSTALLATION ON TOP OF BRACKET AND CRES MOUNTING HARDWARE	

PARTS LIST

	NO. REQ	ITEM NO.	DESCRIPTION	MATERIAL	MATL SPEC	REMARKS	REF DWG
C	2	24	KNOCK – DOWN WALKAWAY BRACKET (SEE NOTES 8, 9 & 12)	PLASTIC–COATED STEEL	ZIAMATIC CORP., YARDLEY, PA 19067, MODEL NO. KD–UH–6–SFPHS, PART NO. 1062–206–000	BACKPLATE, SHORT FOOTPLATE, PHS STRAP, HIGH CYCLE CLIPS FOR 45 MINUTE CYLINDER AND CRES MOUNTING HARDWARE	
	2	23	GUIDE .080 THK SHEET	ALUM ALLOY	5052	SEE SHEET 2	
	1	22	LOCKING BAR–SHORT SEE NOTE 3	ALUM ALLOY	SOUTHCO CONCORDVILLE, PA 19331 PART NO. A5–32–134 –10	ø.34 ROD, 13.4 LG, TYPE H, SEE SHEET 2	
	1	21	LOCKING BAR–LONG SEE NOTE 3	ALUM ALLOY	SOUTHCO CONCORDVILLE, PA 19331 PART NO. A5–32–171 –10	ø.34 ROD, 17.1 LG, TYPE H, SEE SHEET 2	
	1	20	LATCH PLATE WITH TONGUE		AUSTIN HARDWARE DULUTH, GA 30136 NO. C8756–2C	2.12 TONGUE	
	1	19	LEVER HANDLE		AUSTIN HARDWARE DULUTH, GA 30136 NO. 1000A	CCW TO OPEN	
C A	AR	18	ø.125 DOME HD RIVET .126–.187 GRIP RNG	CRES	COML	SEE NOTE 11	
C A	AR	17	ø.125 DOME HD RIVET .251–.375 GRIP RNG	CRES	COML	SEE NOTE 11	
	8	16	FLAT WASHER FOR .375 BOLT	SAE GR. 5	PER ANSI STD B18.22.1		
	8	15	NUT, HEX SELF LOCK .375–16UNC–2B	SAE GR. 5	PER ANSI STD B18.2.2		
	8	14	BOLT, HEX HD, 1.12 LG, .375–16UNC–2A	SAE GR. 5	PER ANSI STD B18.2.1		
	1	13	CONTINUOUS HINGE (CUT TO LENGTH)	SST TYPE 304	SEE NOTE 17. P/N: 1582A328	ø.120 PIN, .060 THK FLG, .500 KNUCKLE LG, 1.500 OPEN WIDTH	
	1	12	SHEATH, BACK .080 THK SHEET	ALUM ALLOY	5052	SEE SHEET 2	
	1	11	DOOR BACK PANEL .080 THK SHEET	ALUM ALLOY	5052	SEE SHEET 2	
	1	10	DOOR FRONT PANEL .080 THK SHEET	ALUM ALLOY	5052	SEE SHEET 2	
	2	9	SHEATH, TOP & BOT .080 THK SHEET	ALUM ALLOY	5052	SEE SHEET 2	
	2	8	SHEATH, SIDE .080 THK SHEET	ALUM ALLOY	5052	SEE SHEET 2	
C	2	7	FLAT BAR 1.50 x .125 THK	ALUM ALLOY	6061–T6	SEE SHEET 2 SEE NOTE 13	
C	20	6	CORNER BRACKET .125 THK SHEET	ALUM ALLOY	6061–T6	SEE SHEET 2 SEE NOTE 13	
	4	5	GUSSET, .250 THK	CARBON STL	ASTM–A36	SEE SHEET 1	
C	4	4	ANGLE, 1.00 x 1.00 x .125 THK	ALUM ALLOY	6061–T6	SEE SHEET 2 SEE NOTE 13	
C	4	3	ANGLE, 1.00 x 1.00 x .125 THK	ALUM ALLOY	6061–T6	SEE SHEET 2 SEE NOTE 13	
C	4	2	ANGLE, 1.00 x 1.00 x .125 THK	ALUM ALLOY	6061–T6	SEE SHEET 2 SEE NOTE 13	
	2	1	ANGLE, 2.00 x 2.00 x .250 THK	CARBON STL	ASTM–A36	SEE SHEET 1	

PARTS LIST

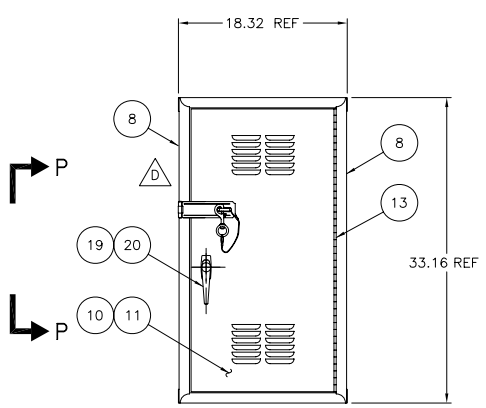

LOCKER WITH BULKHEAD FOUNDATION

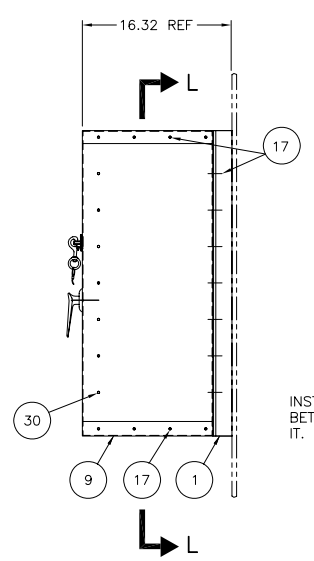

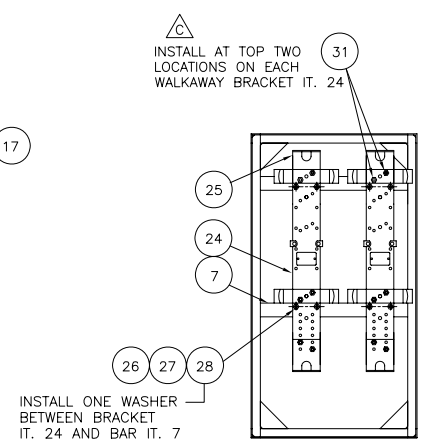

SECTION L–L A C
LOCKER WITH DOOR NOT SHOWN

D SEE DETAILS M ON SHT 3 FOR LOCATIONS OF SPRING CLIPS AND FOOTPLATES.

THIS DRAWING HAS BEEN GENERATED AND IS MAINTAINED BY A CAD SYSTEM. CHANGES SHALL ONLY BE INCORPORATED AS DIRECTED BY NAVSEA 03G.

3	2	1	SH	REVISION STATUS OF SHEETS
A	C	D	REV	

STATEMENT A, UNLIMITED

DIMENSIONAL TOLERANCES – UNLESS OTHERWISE SPECIFIED					
MACHINED			WELDMENT		
DIMENSION	DECIMALS 2 PL	DECIMALS 3 PL	DIMENSION	TOLERANCE	
UNDER 6	± .03	± .010	UNDER 24"	± .03	
6" TO 24"	± .03	± .010	24" & OVER	± .06	
24" & OVER	± .03	± —			
ANGULAR	± 0°–30'		ANGULAR		

UNLESS OTHERWISE NOTED, DIMENSIONS ARE IN INCHES

TOLERANCES ARE IN ACCORDANCE WITH COMMERICAL PRACTICE UNLESS OTHERWISE INDICATED ON DRAWING

	SIGNATURE	DATE
PREPARED	JNHoke	3/31/97
CHECKED	W.Sylvester	5/9/97
HD ENGR	R.P.Bingham	5/9/97
NAVY APPROVAL		
PROJ ENGR	M.J.Black	5/13/97
BR HD	M.W. Hall	5/13/97
DIV DIR	B.E.Miller	5/13/97
GR DEP DIR	–	–
APPD FOR COMNAVSEA	Dennis McCrory	5/19/97

CONTRACT NO. N61533–94–D–0049
PREP ACTIVITY MPR ASSOCIATES, INC. CAGE CODE 6B701

DEPARTMENT OF THE NAVY WASHINGTON, D.C. 20362–5101
NAVAL SEA SYSTEMS COMMAND

SCBA LOCKER NO. MDL–4
LOCKER WITH FOUNDATION
(FOR 1 SCBA AND 1 SPARE CYLINDER)

SIZE	CAGE CODE	ESWBS	DRAWING NO.	REV
F	53711	664	7246008	D

SCALE: 1/8 MASS (WEIGHT) NOTE 7 SHEET 1 OF 3

DRAWING NO. 7246008 SHEET 1 REV D

REVISIONS				
ZONE	REV	DESCRIPTION	DATE	APPROVAL
	–	ORIGINAL ISSUE	5/19/97	
	A	CHANGE LOCATION OF ø.281 HOLES IN IT. 7 ADDED FULL RADIUS EDGES IN IT. 11 & 29 AT DETAIL F, R1.00 TYP WAS R1.00 AND ADDED R.25 TYP	7/30/97	DM
C12 C13 A12 B14	B	REVISED NOTES ABOUT EDGES IN IT. 11 & 29. IN DETAIL H, LOUVER WIDTH WAS 3.13. ADDED IT. 32 IN SECTION G–G AND HOLES IN IT. 11. ADDED CORNER WELDS IN DOOR ASSY. ADDED WELD OPTION IN IT. 29. DELETED HOLE TOLERANCE IN IT. 9, 21, 22, 23, 29, DETAILS H & J, AND SECTION K–K.	5/1/98	DM
C14 A14 A16	C	ADDED HASP MOUNTING HOLES TO DOOR. ADDED HASP TO DOOR ASSEMBLY. REVISED DETAIL J.	5/31/06	MJB

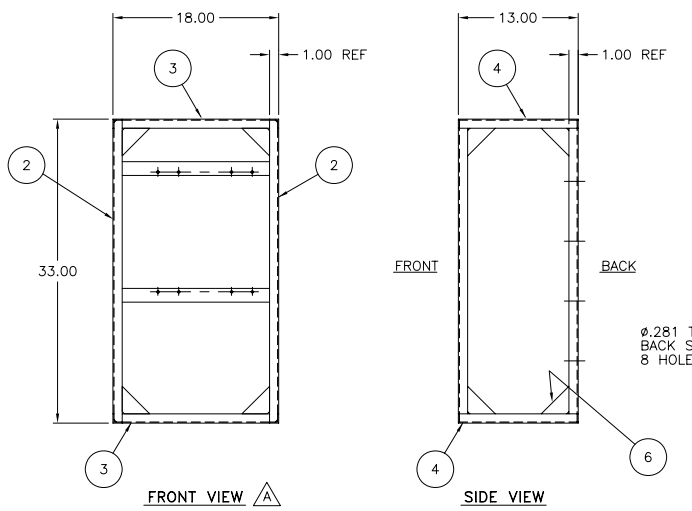

FRAME WELDMENT ASSEMBLY

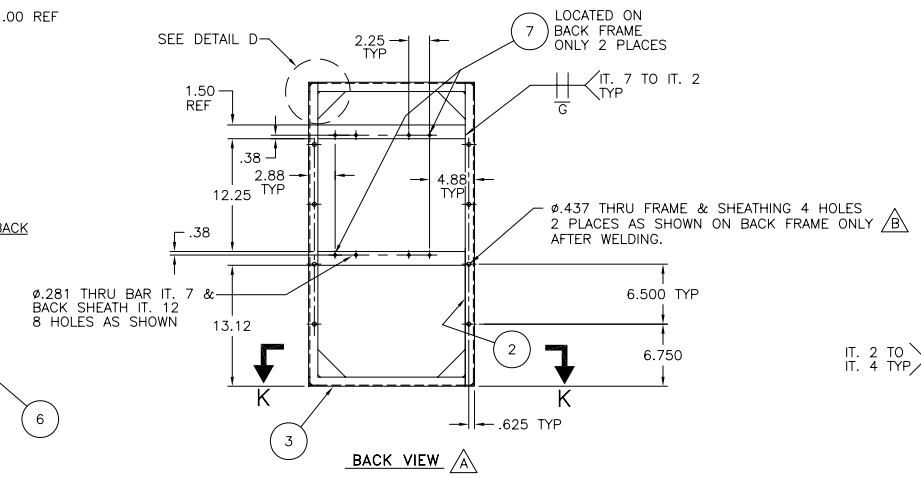

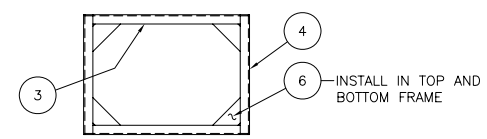

SECTION K–K

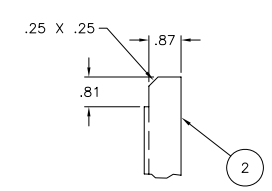

DETAIL E
TYP BOTH ENDS
SCALE: 1/2

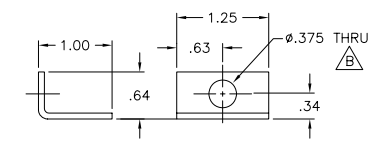

23 GUIDE
SCALE: 1/1

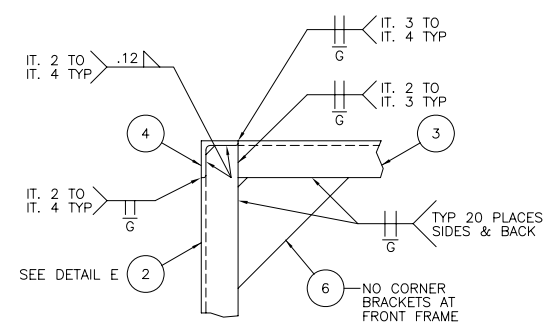

DETAIL D
SCALE: 1/2
TYP 4 CORNERS
FRONT & BACK

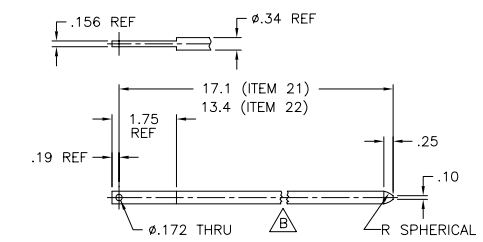

21 LOCKING BAR – LONG
SCALE: 1/2

22 LOCKING BAR – SHORT

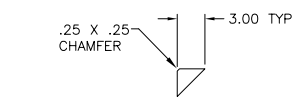

6 CORNER BRACKET

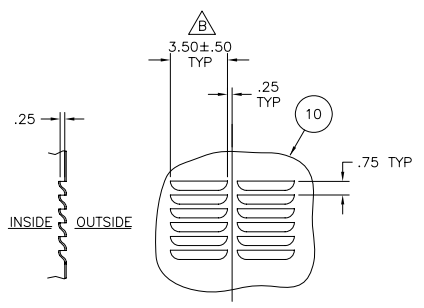

DETAIL H
LOUVER DETAILS
SCALE: 1/4
(TYP 2 PLACES)

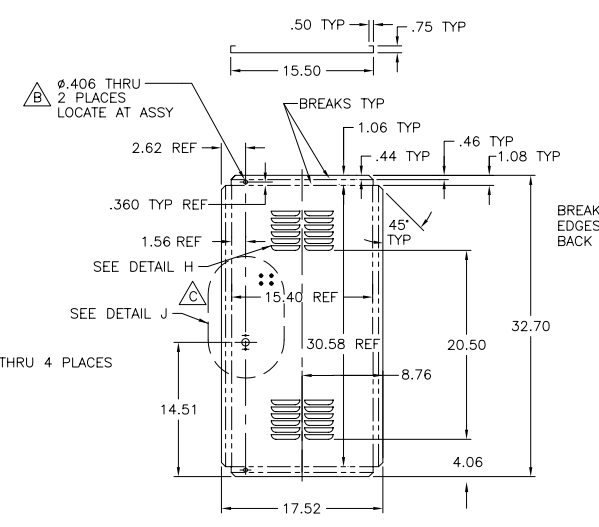

10 DOOR–FRONT PANEL

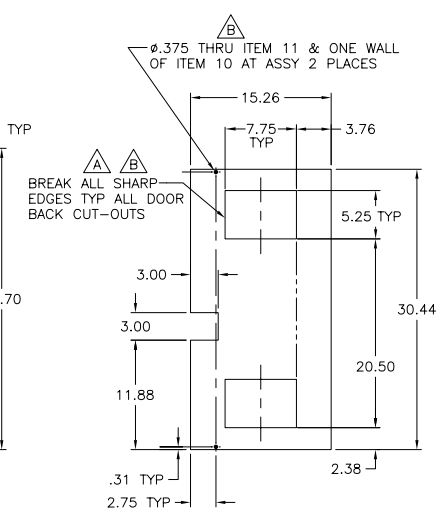

11 DOOR–BACK PANEL

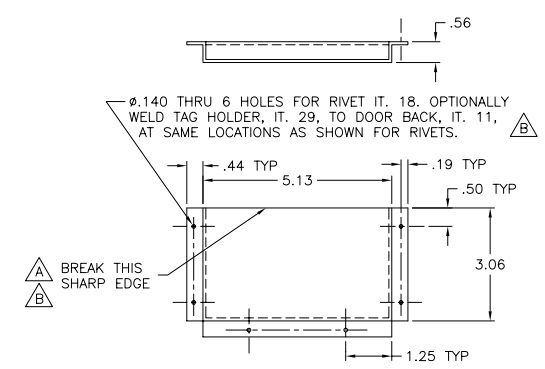

29 TAG HOLDER
SCALE: 1/2

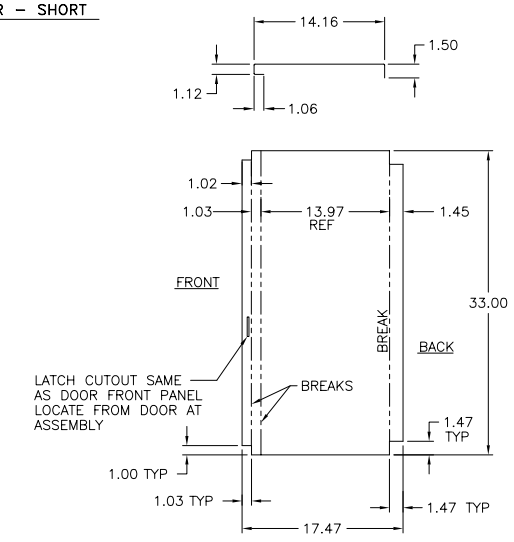

8 SIDE SHEATH

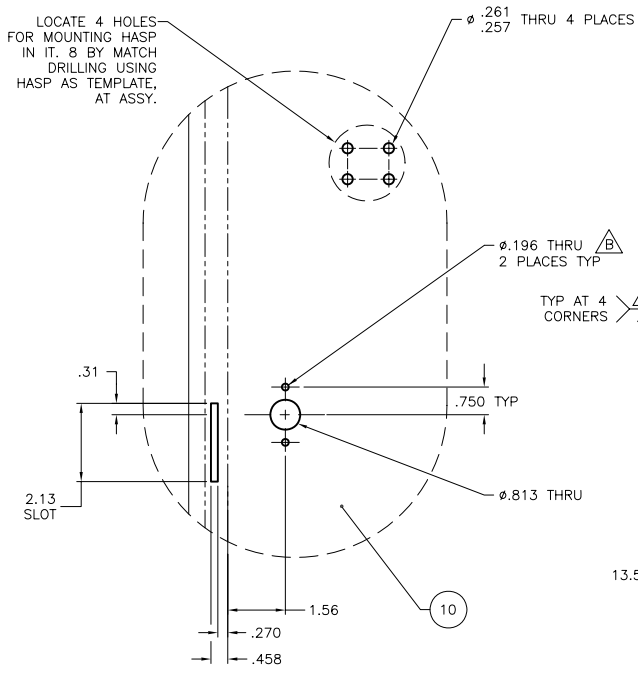

C DETAIL J
SCALE: 1/2

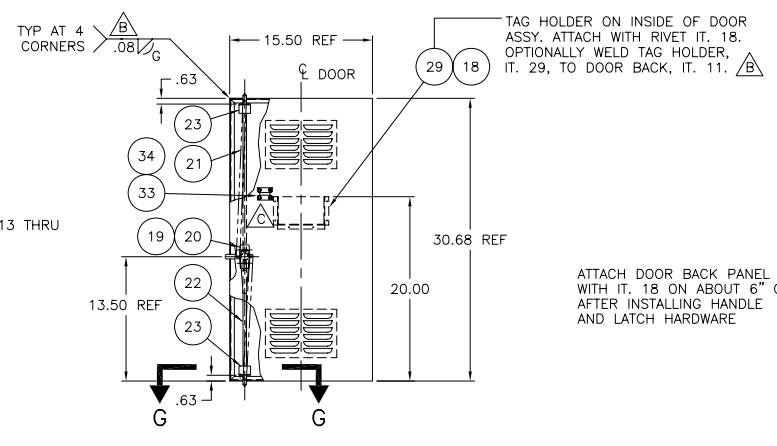

DOOR ASSEMBLY
SEE NOTE 5

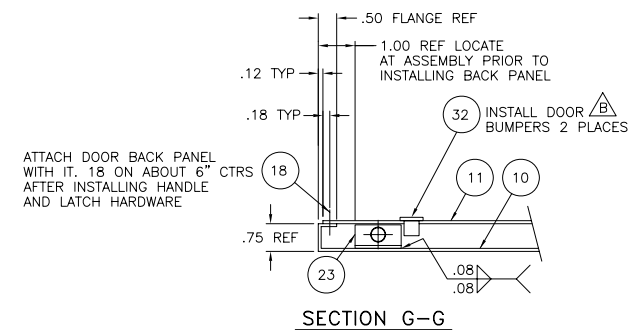

SECTION G–G
SCALE: 1/2

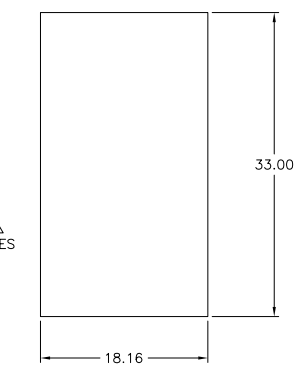

12 BACK SHEATH

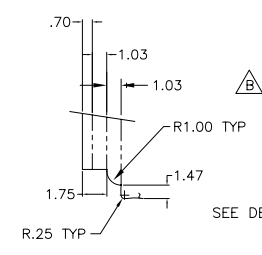

DETAIL F A
SCALE: NONE

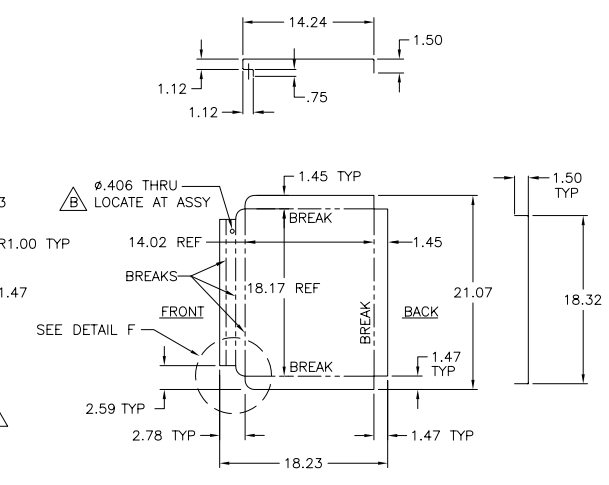

9 TOP & BOTTOM SHEATH

DEPARTMENT OF THE NAVY NAVAL SEA SYSTEMS COMMAND WASHINGTON, D.C. 20362–5101	SIZE	CAGE CODE	ESWBS	DRAWING NO.	REV
DRAWN JNHoke	F	53711	664	7246008	C
ISSUED 5/19/97	SCALE: 1/8	MASS (WEIGHT) ——		SHEET 2 OF 3	

DRAWING NO. 7246008 SHEET 2 REV C

REVISIONS				
ZONE	REV	DESCRIPTION	DATE	APPROVAL
F24 C24 A19 A21	A	ADDED NOTES 1 THRU 14 (RELOCATED FROM SHT 1). REVISION DELTA'S WITH A NUMBER BESIDE IT DENOTES WHAT SHEET THAT REVISION ORIGINALLY CAME FROM. REVISED NOTE 10. ADDED NOTES 15, 16, & 17. ADDED DETAILS M.	5-31-06	MJB

A

NOTES:

1. INTERPRET DRAWING PER ANSI Y14 WITH DIMENSIONING AND TOLERANCING PER ANSI Y14.5.
2. UNLESS OTHERWISE SPECIFIED:
   EDGES: .01-.03 R OR CHAM
   FILLETS: .01-.02 R
   STOCK SURFACES: AS PURCHASED
   MACHINED SURFACES: 250√
3. LOCKING BAR PART NOS. SHOWN ARE FOR EXACT LENGTH REQUIRED. IF EXACT LENGTHS ARE UNAVAILABLE, SUBSTITUTE STANDARD 24-INCH BAR (PART NO. A5-32-240-10) AND CUT AND SHAPE END AS REQUIRED.
4. ALL BEND DIMENSIONS ARE OUTSIDE-TO-OUTSIDE.
5. LOCKER DOOR ASSEMBLY WITH RELATED DETAILS, AS SHOWN, IS RIGHT HANDED. IF A LEFT HANDED DOOR IS DESIRED, THE RELATED DETAILS SHOULD BE MADE OPPOSITE HAND.
6. C1 BY NAVSEA APPROVAL OF THIS DRAWING AND AERONAV LABORATORIES TEST REPORTS 5-3341-1 TO -4, 7-3656-1 AND 8-3734-2, LOCKERS CONSTRUCTED IN ACCORDANCE WITH THE REQUIREMENTS OF THIS DRAWING ARE CLASS I GRADE B SHOCK QUALIFIED TO MIL-S-901D.
7. B1 A1 ESTIMATED WEIGHT: 123 LBS FULL (WITH 45 MIN SCBA/CYLINDER)
   71 LBS EMPTY (WITHOUT SCBA/ CYLINDER)
8. HOLE PATTERNS ARE BASED ON THE LISTED WALKAWAY BRACKETS IT. 24 (PART NO. 1062-206-000) FROM ZIAMATIC CORP., AND WILL NEED TO BE CHANGED IF OTHER BRACKETS ARE SUBSTITUTED.
9. LISTED WALKAWAY BRACKET IT. 24 (PART NO. 1062-206-000) IS FOR 45 MINUTE CYLINDERS. SUBSTITUTE MODEL NO. KD-UH-5-SFPHS, (PART NO. 1052-206-000), IF 30 MINUTE CYLINDERS ARE DESIRED.
10. A LOCKERS SHALL BE ELECTROSTATIC POWDER COATED USING A COMMERCIAL GRADE POWDER SUITABLE FOR INDOOR USE WITH NO EXPOSURE TO SUNLIGHT, BUT WITH EXPOSURE TO MOISTURE, SLAT, AND HEAVY TRAFFIC IN PASSAGEWAYS. THE POWDER COLOR SHALL BE HIGH GLOSS RED PER FED-STD-595B, COLOR 11350. FOR LOCKERS INSTALLED IN LIGHT TRAPS THE COLOR SHALL BE FLAT BLACK PER FED-STD-595B, COLOR 37038.

    EXTERIOR SURFACES TO BE COATED SHALL INCLUDE THE FRONT DOOR PANELS, SIDE PANELS, BACK PANELS, AND TOP PANEL. INTERIOR SURFACES TO BE COATED SHALL INCLUDE THE DOOR BACKS AND EDGES, SIDE PANELS, BACK PANEL, TOP PANEL, BOTTOM PANEL, AND FRAME. DOOR HINGES AND REMOVABLE BOTTOM PANEL, IF PRESENT, MAY BE COATED IF DESIRED. DOOR HANDLES, DOOR LATCH MECHANISM, HASP, DOOR LOCKING BARS, WALKAWAY BRACKETS, FOOTPLATES, AND DOOR BUMPERS SHALL NOT BE COATED.

    BASE FOUNDATIONS AND BULKHEAD FOUNDATIONS (WHICH ARE MADE OF STEEL) SHALL NOT BE POWDER COATED, BUT SHALL INSTEAD BE COATED WITH A WET SPRAYED PRIMER. AT INSTALLATION THESE ITEMS WILL BE WELDED TO THE DECK OR BULKHEAD AND THEN PAINTED TO MATCH THE SURROUNDING AREA.
11. C1 A1 RIVETS IT. 17 TO BE USED TO JOIN TWO LAYERS OF .080 THK SHEATH WITH .125 THK FRAME. RIVET IT. 18 TO BE USED TO JOIN TWO LAYERS OF .080 THK SHEATH OR ONE LAYER OF .080 THK SHEATH WITH .060 THK HINGE. RIVETS IT. 30 TO BE USED TO JOIN ONE LAYER OF .080 THK SHEATH WITH .125 THK FRAME.
12. A1 AS SHOWN, WALKAWAY BRACKET, IT. 24, IS CONFIGURED TO FIT SCOTT AIR-PAK 4.5. USE OF OTHER SCBA MAY REQUIRE RELOCATING SPRING CLIPS AND FOOTPLATES.
13. C1 IF DESIRED, ALUMINUM ALLOY 5086-H111 MATERIAL MAY BE SUBSTITUTED FOR FRAME ITEMS 2, 3, 4, 6 AND 7.
14. C1 ALUMINUM WELDS SHALL USE EITHER ER4043 OR ER5356 FILLER METAL.
15. A SLIDE SWAGING SLEEVES, IT 36, ONTO LANYARD, IT 35. ON ONE END RUN LANYARD THRU SLOT IN SAFETY HASP, IT 33, THEN BACK INTO SWAGING SLEEVE AND SWAGE IN PLACE. ON THE OTHER END RUN LANYARD THRU THE SNAP SWIVEL, IT 37, THEN BACK THRU SWAGING SLEEVE AND SWAGE IN PLACE.
16. A THIS ITEM HAS BEEN SHOCK QUALIFIED TO MIL-S-901, GRADE A. REFERENCE LETTERS SER NO. 623/240.D2213 AND 623/286.D2213 FROM COMMANDING OFFICER, NSWOCD-NAVSSES. THERE SHALL BE NO CHANGES TO THIS LOCKER WITHOUT NAVSEA APPROVAL.
17. A PURCHASE FROM McMASTER-CARR, NEW BRUNSWICK, NJ. 08903, CAGE CODE: 39428.

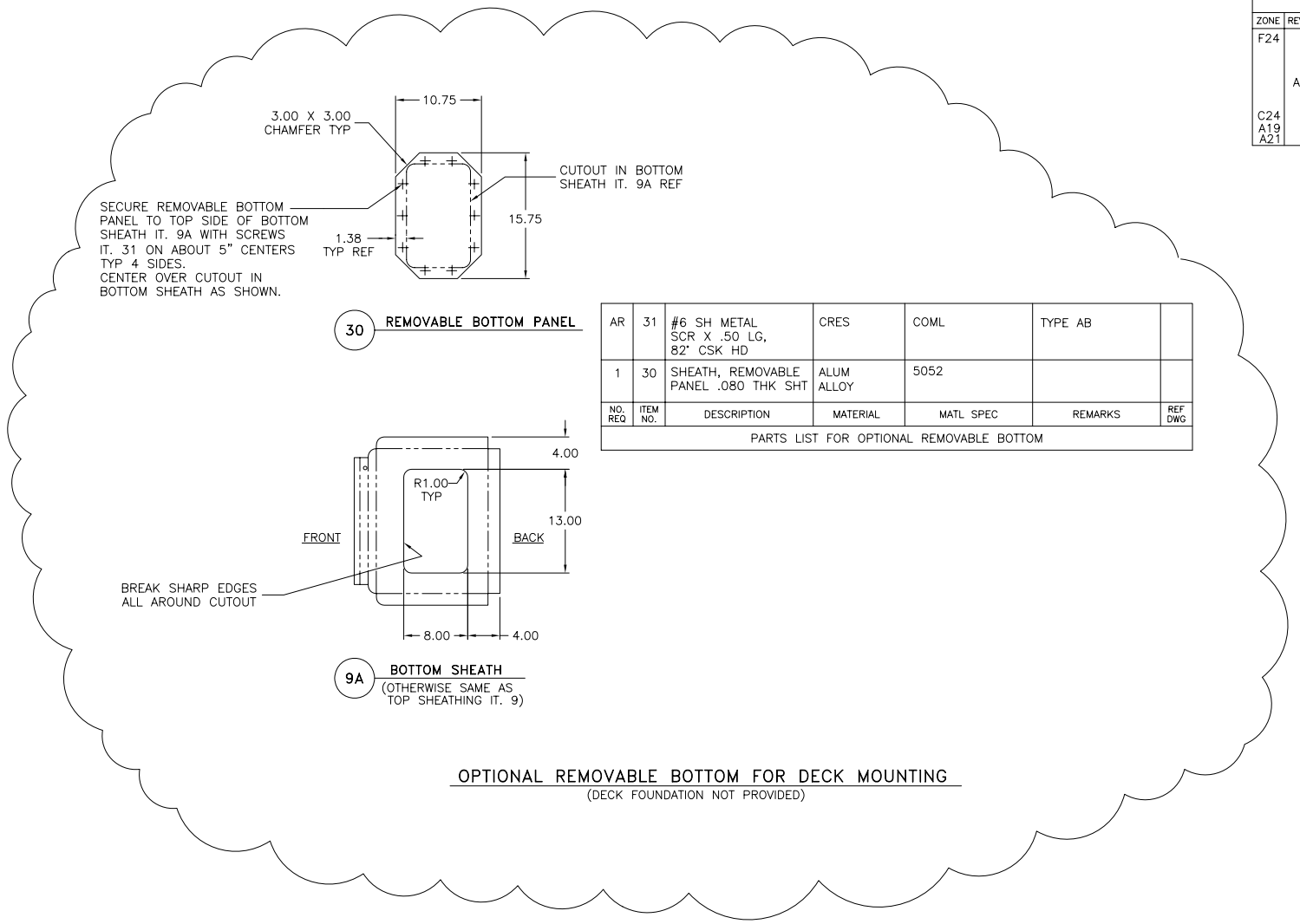

NO. REQ	ITEM NO.	DESCRIPTION	MATERIAL	MATL SPEC	REMARKS	REF DWG
AR	31	#6 SH METAL SCR X .50 LG, 82° CSK HD	CRES	COML	TYPE AB	
1	30	SHEATH, REMOVABLE PANEL .080 THK SHT	ALUM ALLOY	5052		

PARTS LIST FOR OPTIONAL REMOVABLE BOTTOM

OPTIONAL REMOVABLE BOTTOM FOR DECK MOUNTING
(DECK FOUNDATION NOT PROVIDED)

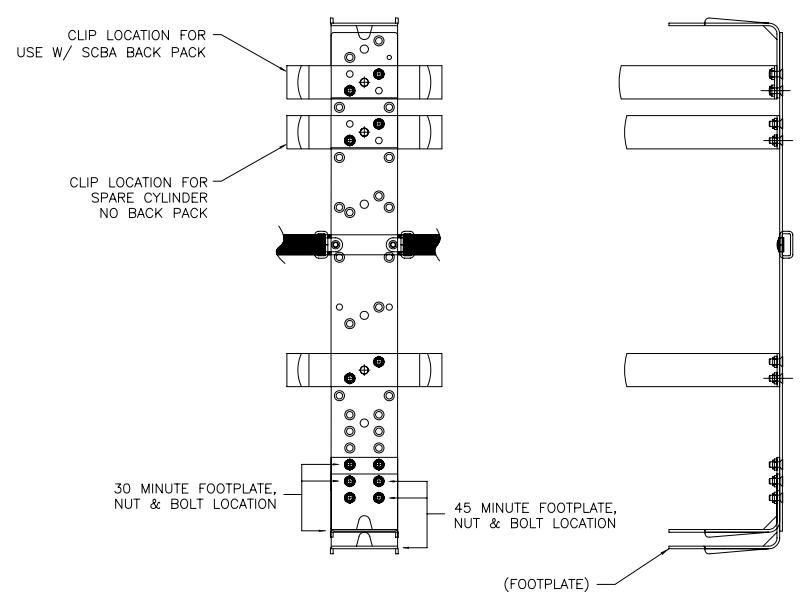

DETAIL M A
SCALE: NONE
LOCATION OF SPRING CLIPS & FOOT PLATES

DEPARTMENT OF THE NAVY NAVAL SEA SYSTEMS COMMAND WASHINGTON, D.C. 20362-5101	SIZE	CAGE CODE	ESWBS	DRAWING NO.	REV
DRAWN JTerek	F	53711	664	7246008	A
ISSUED	SCALE: 1/8	MASS (WEIGHT) ——		SHEET 3 OF 3	

DRAWING NO. 7246008 SHEET 3 REV A